

gepef

Pressure Intensifier

PRESSURE INTENSIFIER — INTRODUCTION

ScanWill intensifiers are based on a piston principle, where a larger diameter piston pushes a smaller diameter piston, thus increasing the pressure to a factor equal to the ratio: Larger diameter area divided by smaller diameter area.

The outlet pressure will always be proportionate to the supplied pressure.

The diagram shows the basic principle of the ScanWill intensifiers, consisting of a piston arrangement, a Piston.
Control Valve PCV, Check Valves CV1 & CV2 and the Pilot Operated check Valve POV.

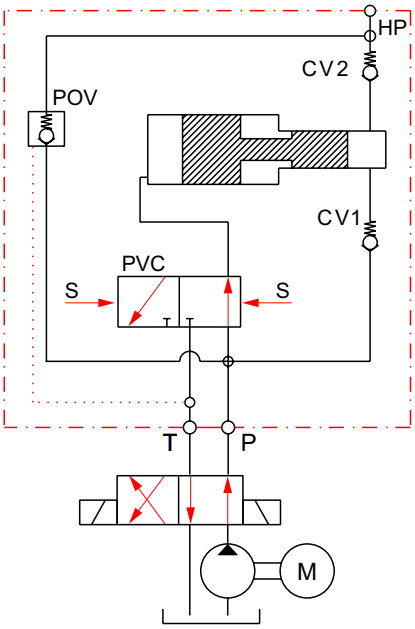

ScanWill's compact hydraulic pressure intensifiers offer an easy, energy-saving, safe and cost-efficient solution to achieving a higher output pressure from an existing low-pressure power source.

Low pressure supplied to the inlet port – say 15 - 200 bar / 218 - 2,900 psi – is transformed to a higher pressure at the outlet port – from 20 - 4,000 bar / 290 - 58,000 psi.

ScanWill's pressure intensifiers are offered in cast iron and steel, with a chrome finish, as well as in stainless steel for the oil & gas sector.



PRESSURE INTENSIFIER – PRODUCTS



(Low / Medium Pressure) MP-S

In-line pressure intensifier

End pressure range: 20 - 800 bar / 290 - 11,600 psi

Multiple intensification ratios available

Reciprocating - continuously delivers flow during pressure build-up

All high-pressure valves are integrated



(Low / Medium Pressure) MP-T

n-line pressure intensifier

End pressure range: 20 - 800 bar / 290 - 11,600 psi

Multiple intensification ratios available

Reciprocating - continuously delivers flow during pressure build-up

All high-pressure valves are integrated



(Low / Medium Pressure) MP-M

In-line pressure intensifier

End pressure range: 20 - 800 bar / 290 - 11,600 psi

Multiple intensification ratios available

Reciprocating - continuously delivers flow during pressure build-up

All high-pressure valves are integrated – including a P.O. check Valve PO



MP-C (Low / Medium Pressure)

Cetop DO3 / NG6 pressure intensifier

End pressure range: 20 - 500 bar / 290 - 7,250 psi

Multiple intensification ratios available

Reciprocating - continuously delivers flow during pressure build-up

All high-pressure valves are integrated – including a P.O. check Valve POV



(Low / Medium Pressure) MP-L

In-line pressure intensifier

End pressure range: 20 - 800 bar / 290 - 11,600 psi

Multiple intensification ratios available

Reciprocating - continuously delivers flow during pressure build-up

All high-pressure valves are integrated – including a P.O. check Valve POV



(Low / Medium Pressure) MP-CT

Cetop DO3 / NG6 pressure intensifier

End pressure range: 20 - 800 bar / 290 - 11,600 psi

Multiple intensification ratios available

Reciprocating - continuously delivers flow during pressure build-up

All high-pressure valves are integrated – including a P.O. check Valve POV

No change of pressure in A & B ports, separate port for high pressure

PRESSURE INTENSIFIER – PRODUCTS





(Low / Medium Pressure) MP-F
Flange-on pressure intensifier
End pressure range: 20 - 700 bar / 290 - 10,150 psi
Multiple intensification ratios available
Reciprocating - continuously delivers flow during pressure build-up
All high-pressure valves are integrated – including a P.O. check Valve POV

(High Pressure) MP-2000
In-line pressure intensifier
End pressure range: 800 - 3,000 bar / 11,600 - 43,500 psi
Multiple intensification ratios available
Reciprocating - continuously delivers flow during pressure build-up
All high-pressure valves are integrated / Selection of top plates for high pressure connection available

Pressure Intensifier

MP-S (Low / Medium Pressure)



ScanWill®
More Pressure. More Power

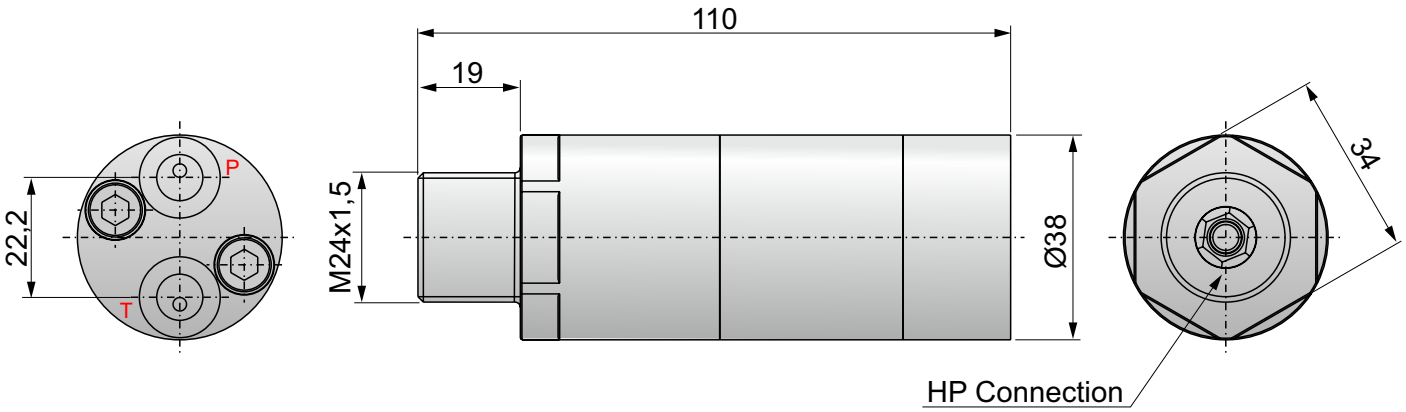

P & T Ports: G1/8" (1/8" BSP), HP-Port: G1/4" (1/4" BSP)

Before installing the intensifier

Ensure the surroundings and the connecting parts are clean and free from burrs..

Fluids

For use with standard hydraulic oils and water glycol (min. 5% glycol). Preferred viscosity range 20 - 46 cSt

Filtration requirements

10 µm nominal or better, maximum 19/16 according to ISO 4406

Hydraulic bleeding

During start-up of the system it is recommended to ensure no air is trapped in the system, as this may cause function problems.

Connecting the intensifier

Connecting the MP-S pressure intensifier to a system is only to be done by trained personnel.

1. Connect the P-port of the intensifier to the hydraulic pressure supply.
2. Connect the T-port to the tank line.
3. Connect the HP-port to the end pressure line / cylinder.

CAUTION:

Ensure the fittings and components on the output side are rated for the end pressure delivered by the Scanwill intensifier.

High Flow Applications

In systems with flow rates larger than permissible for the intensifier, the inlet to the P and T ports must be limited according to the flow pressure table below. To maintain the speed in the cylinder, an external p.o.check valve capable of handling the system flow and end pressure can be inserted in parallel with the MP-S intensifier

Function

The MP-S is an in-line hydraulic pressure intensifier designed to increase a supplied pump pressure to a higher end pressure (for fluids only). The intensification ratio is fixed, and the end pressure is always proportional with the supplied pressure. Fig. 1 shows the schematic of the MP-S intensifier increasing the pressure in a single or double acting cylinder.

When applying flow to the P-port and connecting the T-port to tank, the full pump flow will go straight through the intensifier check valves CV1, CV2 and POV to the cylinder, allowing the rod to move out at pump speed. When the cylinder is filled up and the pressure has risen to pump pressure, the intensifier pistons automatically increase the pressure to the set end pressure. Keeping the pump connected ensures the intensifier will automatically work to maintain the end pressure in the cylinder, in case the pressure drops.

The cylinder can be retracted by activating the integrated p.o. check valve POV by connecting the P-port to tank and the T port to pump. This will open the POV creating a free passage from the HP-side back to tank.

FIG.1

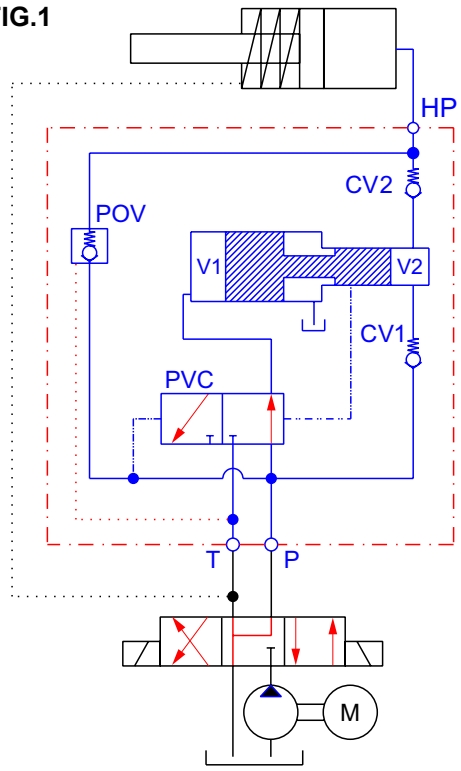

Intensification ratios, flow and pressure settings

Product number	Intensification ratio	Max. supply Flow* (LPM)	Outlet supply pressure** (bar)	Average outlet Flow*** (LPM)	Outlet pressure range**** (bar)
MP-S-P-2.0-G	2.0	8.0	200	0.3	30 - 400
MP-S-P-2.4-G	2.4	8.0	200	0.3	30 - 480
MP-S-P-2.8-G	2.8	8.0	200	0.3	50 - 560
MP-S-P-3.0-G	3.0	8.0	200	0.3	60 - 600
MP-S-P-3.4-G	3.4	8.0	200	0.2	60 - 680
MP-S-P-4.0-G	4.0	8.0	200	0.2	70 - 800
MP-S-P-5.0-G	5.0	8.0	160	0.2	70 - 800
MP-S-P-6.0-G	6.0	8.0	133	0.1	80 - 800
MP-S-P-7.0-G	7.0	8.0	114	0.1	100 - 800
MP-S-P-9.0-G	9.0	8.0	61	0.1	130 - 800

* Max. supply flow limits not to be exceeded, as this will damage the internal check valves and over speed the intensifier pistons. Min. supply flow is 2 LPM

** Max. supply pressure limits not to be exceeded, as this will cause damage to the intensifier parts, and will cause to high outlet pressure.
Pressure spikes must be avoided.

*** The Average flow is the flow generated by the intensifier pistons when increasing the pressure from pump pressure to end pressure. Initially the flow is high, and as the pressure increases the flow decreases and will eventually stop when the end pressure has been reached.

**** The outlet pressure is proportional with the supplied pressure, and can be set at any value within the range.
The max. pressure within the range for each intensification ratio must not be exceeded.

Pressure Intensifier

MP-T (Low / Medium Pressure)



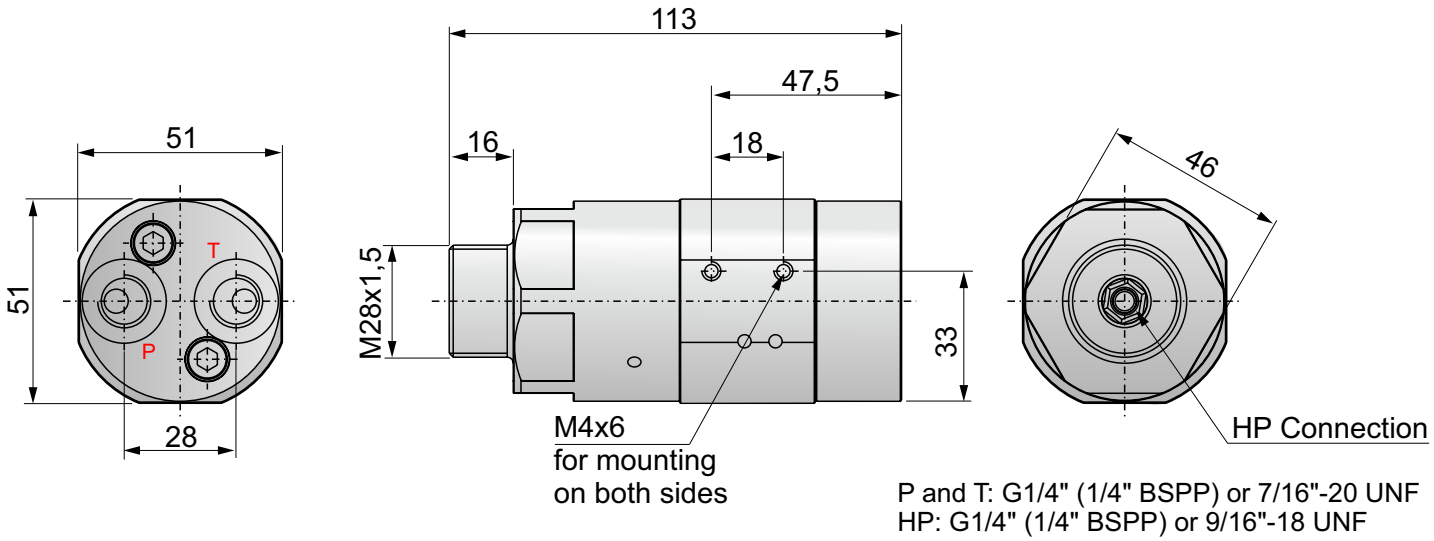

P and T: G1/4" (1/4" BSPP) or 7/16"-20 UNF
HP: G1/4" (1/4" BSPP) or 9/16"-18 UNF

Before installing the intensifier

Ensure the surroundings and the connecting parts are clean and free from burrs.

Fluids

For use with standard hydraulic oils and water glycol (min. 5% glycol). Preferred viscosity range 20 - 46 cSt

Filtration requirements

10 µm nominal or better, maximum 19/16 according to ISO 4406

Hydraulic bleeding

During start-up of the system, it is recommended to ensure no air is trapped in the system, as this may cause function problems.

Connecting the intensifier

Connecting the MP-T pressure intensifier to a system is only to be done by trained personnel.
1. Connect the P-port of the intensifier to the hydraulic pressure supply.
2. Connect the T-port to the tank line.
3. Connect the HP-port to the end pressure line / cylinder.

CAUTION:
Ensure the fittings and components on the output side are rated for the end pressure delivered by the Scanwill intensifier.

Mounting and connection

The MP-T pressure intensifier can be mounted using a standard pipe clamp. The accessories below for clamping and connecting the intensifier are available.


Mounting brackets for base plate


Nut M28 x 1.5 for fixation


Connection kit for block mounting

Pressure Intensifier

MP-T (Low / Medium Pressure)

Function

The MP-T is an in-line hydraulic pressure intensifier designed to increase a supplied pump pressure to a higher end pressure (for fluids only). The intensification ratio is fixed, and the end pressure is always proportional with the supplied pressure. Fig. 1 shows the schematic of the MP-T intensifier increasing the pressure in a single or double acting cylinder.
When applying flow to the P-port and connecting the T-port to tank, the full pump flow will go straight through the intensifier check valves CV1, CV2 and POV (optional) to the cylinder, allowing the rod to move out at pump speed. When the cylinder is filled up and the pressure has risen to pump pressure, the intensifier pistons automatically increase the pressure to the set end pressure. Keeping the pump connected ensures the intensifier will automatically work to maintain the end pressure in the cylinder, in case the pressure drops.
If the POV is integrated the cylinder can be retracted by connecting the P-port to tank and the T-port to pump. This will open the POV creating a free passage from the HP-side back to tank

High Flow Applications

In systems with flow rates larger than permissible for the intensifier, the inlet to the P and T ports must be limited according to the flow pressure table below. To maintain the speed in the cylinder, an external p.o.check valve capable of handling the system flow and end pressure can be inserted in parallel with the MP-T intensifier

FIG.1

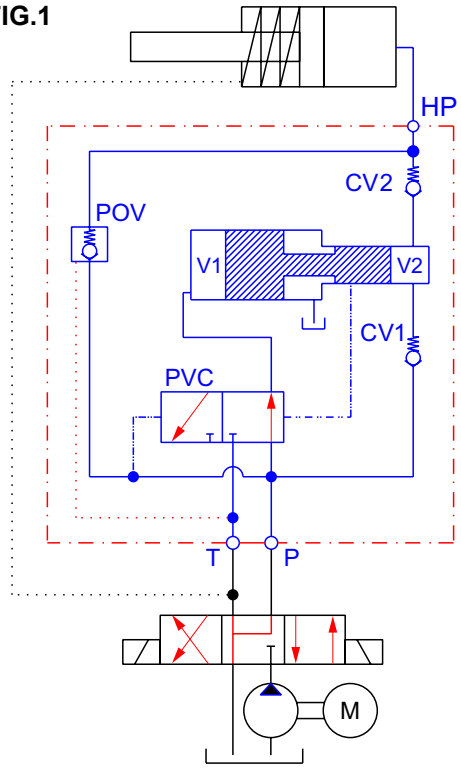

Intensification ratios, flow and pressure settings

Product number*	Intensification ratio	Max. supply Flow** (LPM)	Outlet supply pressure*** (bar)	Average outlet Flow**** (LPM)	Outlet pressure range***** (bar)
MP-T-S/P-1.5-G/U	1.5	15.0	200	0.3	30 - 300
MP-T-S/P-2.0-G/U	2.0	15.0	200	0.5	40 - 400
MP-T-S/P-2.8-G/U	2.8	8.0	200	0.3	56 - 560
MP-T-S/P-3.4-G/U	3.4	15.0	200	0.5	68 - 680
MP-T-S/P-4.0-G/U	4.0	14.0	200	0.4	80 - 800
MP-T-S/P-5.0-G/U	5.0	14.0	160	0.3	100 - 800
MP-T-S/P-7.0-G/U	7.0	13.0	114	0.2	140 - 800
MP-T-S/P-9.0-G/U	9.0	13.0	89	0.1	180 - 800
MP-T-S/P-13.0-G/U	13.0	10.0	61	0.1	260 - 800

* **S** means intensification only, P means the p.o. check valve POV is integrated.
G means all ports are G1/4" ,
U means P and T connections are 7/16"-20 UNF, and the HP connection is 9/16"-18 UNF

** Max. supply flow limits not to be exceeded, as this will damage the internal check valves and over speed the intensifier pistons. Min. supply flow is 2 LPM

*** Max. supply pressure limits not to be exceeded, as this will cause damage to the intensifier parts, and will cause to high outlet pressure.
Pressure spikes must be avoided.

**** The Average flow is the flow generated by the intensifier pistons when increasing the pressure from pump pressure to end pressure. Initially the flow is high, and as the pressure increases the flow decreases and will eventually stop when the end pressure has been reached.

***** The outlet pressure is proportional with the supplied pressure, and can be set at any value within the range.
The max. pressure within the range for each intensification ratio must not be exceeded



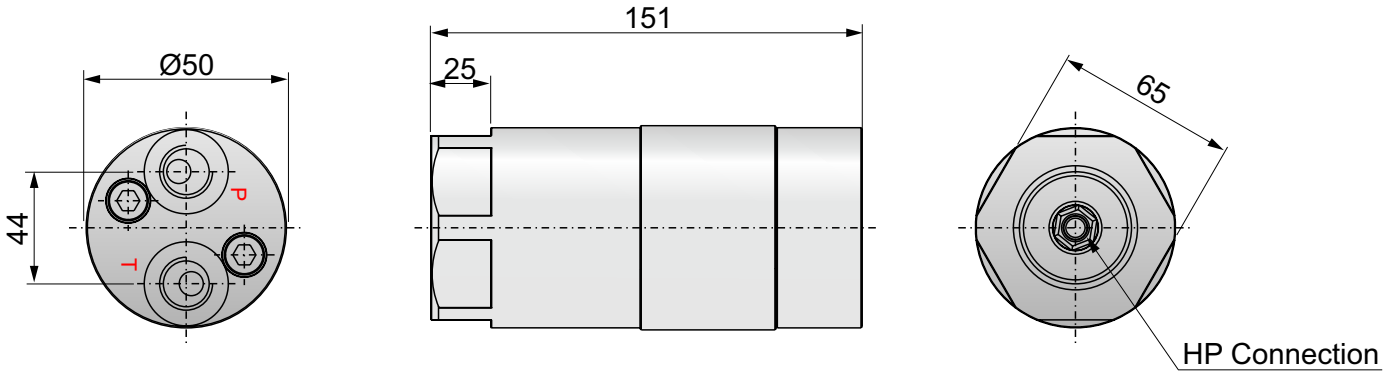

P and T: G3/8" (3/8" BSPP)
HP: G1/2" (1/2" BSPP)

Before installing the intensifier

Ensure the surroundings and the connecting parts are clean and free from burrs.

Fluids

For use with standard hydraulic oils and water glycol (min. 5% glycol).
Preferred viscosity range 20 - 46 cSt

Filtration requirements

10 µm nominal or better, maximum 19/16 according to ISO 4406

Hydraulic bleeding

During start-up of the system, it is recommended to ensure no air is trapped in the system, as this may cause function problems.

Connecting the intensifier

Connecting the MP-M pressure intensifier to a system is only to be done by trained personnel.
1. Connect the P-port of the intensifier to the hydraulic pressure supply.
2. Connect the T-port to the tank line.
3. Connect the HP-port to the end pressure line / cylinder.

CAUTION:
Ensure the fittings and components on the output side are rated for the end pressure delivered by the Scanwill intensifier.

Mounting and connection

The MP-M pressure intensifier can be mounted using a standard pipe clamp. As an accessory a connection plate for mounting the supply side (P & T) to a customer block is offered, see below.

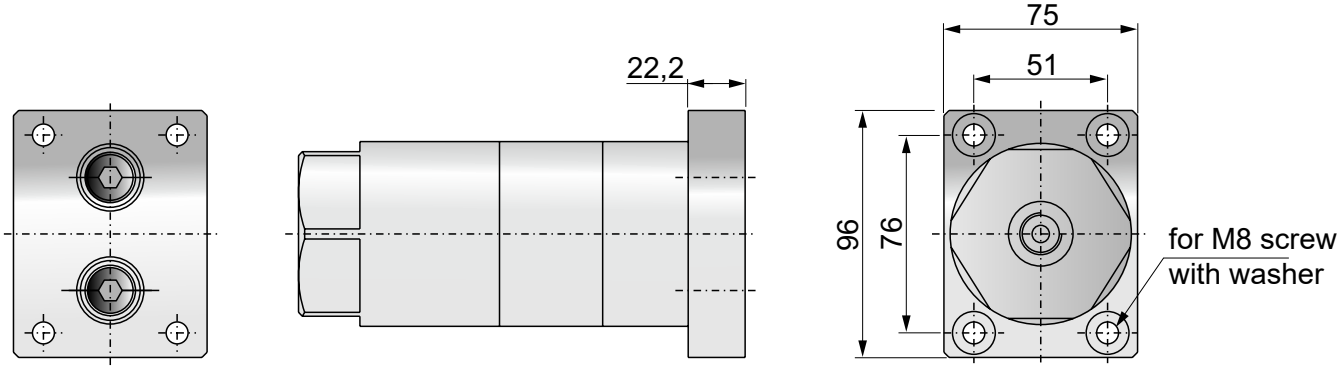

Function

The MP-M is an in-line hydraulic pressure intensifier designed to increase a supplied pump pressure to a higher end pressure (for fluids only). The intensification ratio is fixed, and the end pressure is always proportional with the supplied pressure. Fig. 1 shows the schematic of the MP-M intensifier increasing the pressure in a single or double acting cylinder.
When applying flow to the P-port and connecting the T-port to tank, the full pump flow will go straight through the intensifier check valves CV1, CV2 and POV (optional) to the cylinder, allowing the rod to move out at pump speed. When the cylinder is filled up and the pressure has risen to pump pressure, the intensifier pistons automatically increase the pressure to the set end pressure. Keeping the pump connected ensures the intensifier will automatically work to maintain the end pressure in the cylinder, in case the pressure drops.
If the POV is integrated the cylinder can be retracted by connecting the P-port to tank and the T-port to pump. This will open the POV creating a free passage from the HP-side back to tank.

High Flow Applications

In systems with flow rates larger than permissible for the intensifier, the inlet to the P and T ports must be limited according to the flow pressure table below. To maintain the speed in the cylinder, an external p.o.check valve capable of handling the system flow and end pressure can be inserted in parallel with the MP-M intensifier

FIG.1

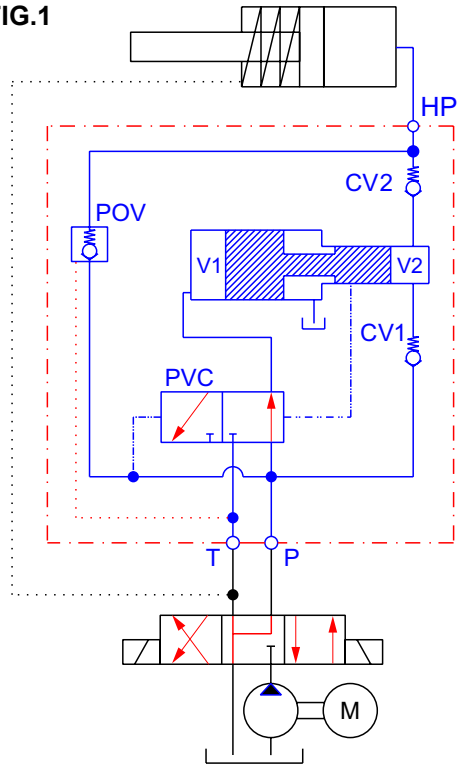

Intensification ratios, flow and pressure settings

Product number*	Intensification ratio	Max. supply Flow** (LPM)	Outlet supply pressure*** (bar)	Average outlet Flow**** (LPM)	Outlet pressure range***** (bar)
MP-M-1.8 / MP-M-1.8-S	1.8	25.0	200	1.5	30 - 360
MP-M-2.1 / MP-M-2.1-S	2.0	25.0	200	1.3	40 - 400
MP-M-2.6 / MP-M-2.6-S	2.6	35.0	200	3.0	56 - 520
MP-M-3.4 / MP-M-3.4-S	3.4	35.0	200	2.8	68 - 680
MP-M-4.0 / MP-M-4.0-S	4.0	35.0	200	2.4	80 - 800
MP-M-5.0 / MP-M-5.0-S	5.0	35.0	160	1.9	100 - 800
MP-M-7.0 / MP-M-7.0-S	7.0	35.0	114	1.3	140 - 800

* As standard the p.o. check valve POV is integrated. Products marked with an -S has no POV integrated.

** Max. supply flow limits not to be exceeded, as this will damage the internal check valves and over speed the intensifier pistons.
Min. supply flow is 3 LPM

*** Max. supply pressure limits not to be exceeded, as this will cause damage to the intensifier parts, and will cause to high outlet pressure.
Pressure spikes must be avoided.

**** The Average flow is the flow generated by the intensifier pistons when increasing the pressure from pump pressure to end pressure. Initially the flow is high, and as the pressure increases the flow decreases and will eventually stop when the end pressure has been reached.

***** The outlet pressure is proportional with the supplied pressure, and can be set at any value within the range. The max. pressure within the range for each intensification ratio must not be exceeded.



For subplate mounting with interface CETOP 3/NG6
according to ISO 4401-03-02 and DIN 24 340

ScanWill®
More Pressure. More Power

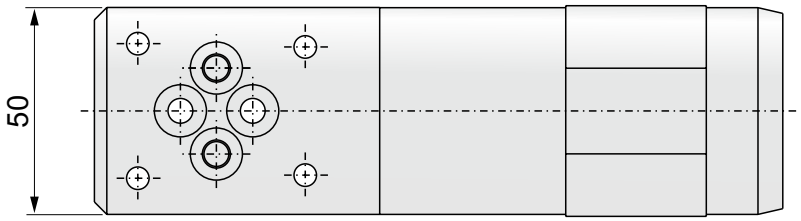

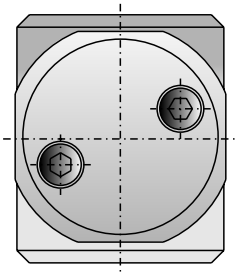

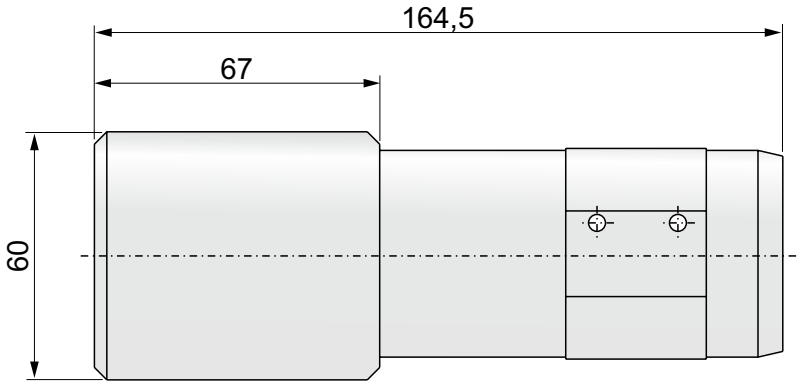

Before installing the intensifier

Ensure the surroundings and the connecting parts are clean and free from burrs.

Filtration requirements

10 µm nominal or better, maximum 19/16 according to ISO 4406

Fluids

For use with standard hydraulic oils and water glycol (min. 5% glycol).
Preferred viscosity range 20 - 46 cSt

Hydraulic bleeding

During start-up of the system, it is recommended to ensure no air is trapped in the system, as this may cause function problems.

Installing the MP-C intensifier

The MP-C is designed for CETOP 3 / NG6 subplate mounting, and should be positioned lowest in the stacking system right on top of the subplate.
Installation to be done by trained personnel only.
A instalação deve ser feita apenas por pessoal treinado.

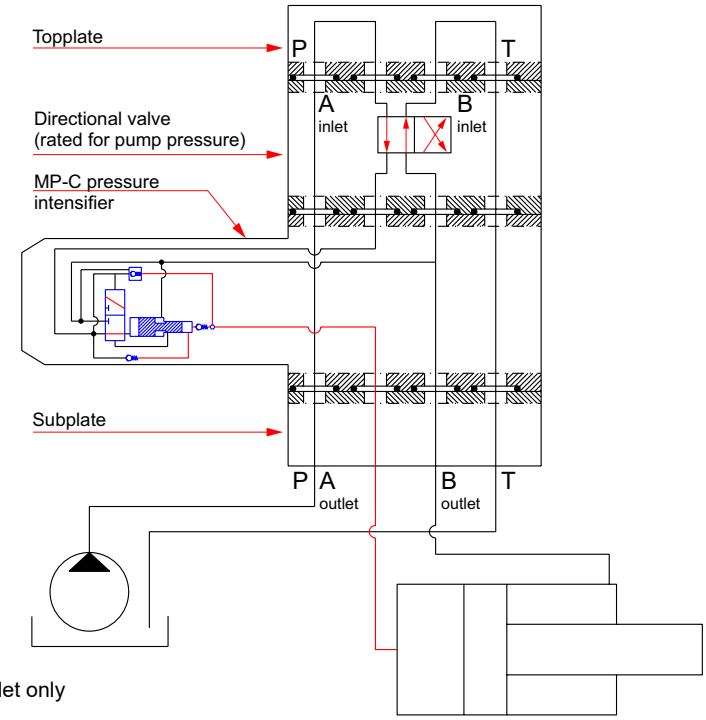

NOTICE:
The end pressure delivered by the MP-C pressure intensifier is present in Aoutlet only

CAUTION:
Ensure the fittings and components on the output side are rated for the end pressure delivered bythe MP-C intensifier.

Function

The MP-C is a subplate mounted hydraulic pressure intensifier designed to increase a supplied pump pressure to a higher end pressure (for fluids only). The intensification ratio is fixed, and the end pressure is always proportional with the supplied pressure. Fig. 1 shows the schematic of the MP-C intensifier increasing the pressure in a single or double acting cylinder. When applying flow to the Ainlet-port and connecting the Binlet port to tank, the full pump flow will go straight through the intensifier check valves CV1, CV2 and POV (optional) through Aoutlet to the cylinder, allowing the rod to move out at pump speed. When the cylinder is filled up and the pressure has risen to pump pressure, the intensifier pistons automatically increase the pressure to the set end pressure. Keeping the pump connected ensures the intensifier will automatically work to maintain the end pressure in the cylinder, in case the pressure drops.

If the POV is integrated the cylinder can be retracted by chaning position on the directional valve positioned above the MP-C pressure intensifier connecting the Ainlet to tank and the Binlet to pump. This will open the POV creating a free passage from the Aoutlet back to tank.

FIG.1

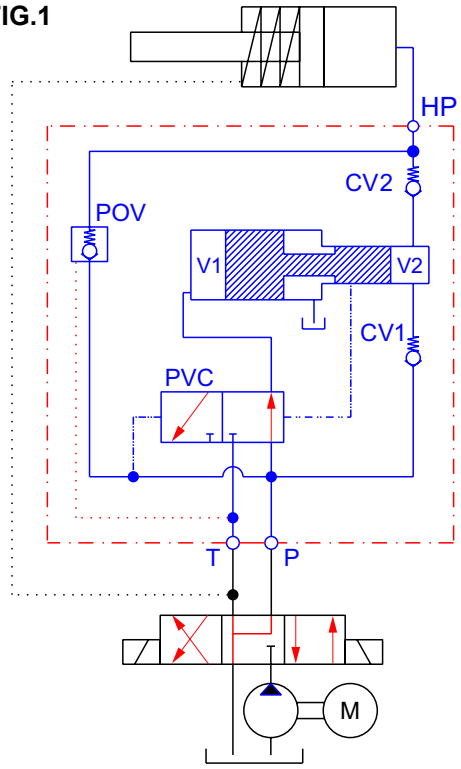

Intensification ratios, flow and pressure settings

Product number*	Intensification ratio	Max. supply Flow** (LPM)	Outlet supply pressure*** (bar)	Average outlet Flow**** (LPM)	Outlet pressure range***** (bar)
MP-C-1.5 / MP-C-1.5-S	1.5	15.0	200	0.3	30 - 300
MP-C-2.0 / MP-C-2.0-S	2.0	15.0	200	0.5	40 - 400
MP-C-2.8 / MP-C-2.8-S	2.8	8.0	179	0.3	56 - 500
MP-C-3.4 / MP-C-3.4-S	3.4	15.0	147	0.5	68 - 500
MP-C-4.0 / MP-C-4.0-S	4.0	14.0	125	0.4	80 - 500
MP-C-5.0 / MP-C-5.0-S	5.0	14.0	100	0.3	100 - 500
MP-C-7.0 / MP-C-7.0-S	7.0	13.0	72	0.2	140 - 500
MP-C-9.0 / MP-C-9.0-S	9.0	13.0	56	0.1	180 - 500

*S means intensification only, no check valve POV is integrated.

** Max. supply flow limits not to be exceeded, as this will damage the internal check valves and over speed the intensifier pistons.
Min. supply flow is 2 LPM

*** Max. supply pressure limits not to be exceeded, as this will cause damage to the intensifier parts, and will cause to high outlet pressure.
Pressure spikes must be avoided.

**** The Average flow is the flow generated by the intensifier pistons when increasing the pressure from pump pressure to end pressure. Initially the flow is high, and as the pressure increases the flow decreases and will eventually stop when the end pressure has been reached.

***** The outlet pressure is proportional with the supplied pressure, and can be set at any value within the range. The max. pressure within the range for each intensification ratio must not be exceeded.

Pressure Intensifier

MP-L (Low / Medium Pressure)



ScanWill®
More Pressure. More Power

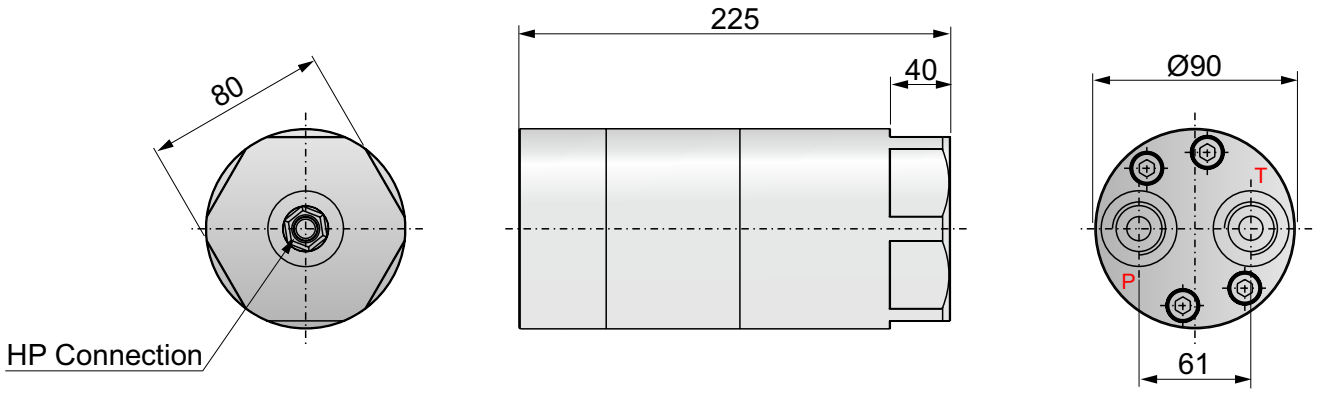

All ports: G1/2" (1/2" BSPP)

Before installing the intensifier

Ensure the surroundings and the connecting parts are clean and free from burrs.

Fluids

For use with standard hydraulic oils and water glycol (min. 5% glycol). Preferred viscosity range 20 - 46 cSt

Filtration requirements

10 µm nominal or better, maximum 19/16 according to ISO 4406

Hydraulic bleeding

During start-up of the 80 system, it is recommended to ensure no air is trapped in the system, as this may cause function problems.

Connecting the intensifier

Connecting the MP-L pressure intensifier to a system is only to be done by trained personnel.
1. Connect the P-port of the intensifier to the hydraulic pressure supply.
2. Connect the T-port to the tank line.
3. Connect the HP-port to the end pressure line / cylinder.

CAUTION:
Ensure the fittings and components on the output side are rated for the end pressure delivered by the Scanwill intensifier.

Mounting and connection

The MP-L pressure intensifier can be mounted using a standard pipe clamp.

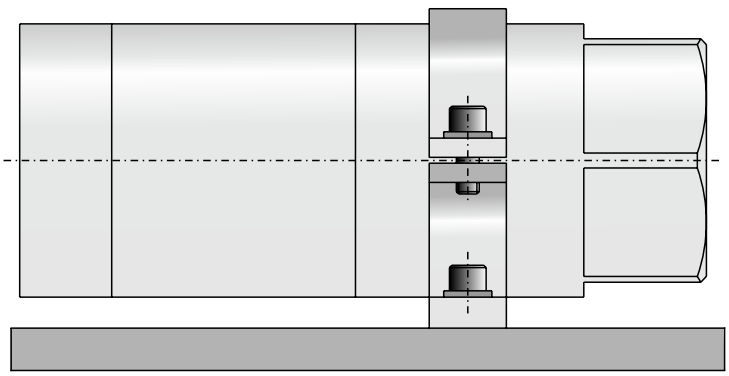

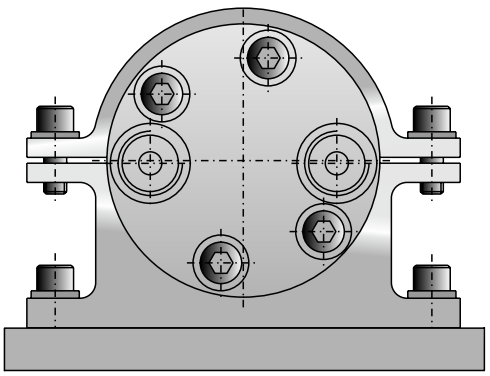

Function

The MP-L is an in-line hydraulic pressure intensifier designed to increase a supplied pump pressure to a higher end pressure (for fluids only). The intensification ratio is fixed, and the end pressure is always proportional with the supplied pressure. Fig. 1 shows the schematic of the MP-L intensifier increasing the pressure in a single or double acting cylinder.
When applying flow to the P-port and connecting the T-port to tank, the full pump flow will go straight through the intensifier check valves CV1, CV2 and POV (optional) to the cylinder, allowing the rod to move out at pump speed. When the cylinder is filled up and the pressure has risen to pump pressure, the intensifier pistons automatically increase the pressure to the set end pressure. Keeping the pump connected ensures the intensifier will automatically work to maintain the end pressure in the cylinder, in case the pressure drops.
The cylinder can be retracted by connecting the P-port to tank and the T-port to pump. This will open the POV creating a free passage from the HP-side back to tank.

High Flow Applications

In systems with flow rates larger than permissible for the intensifier, the inlet to the P and T ports must be limited according to the flow pressure table below. To maintain the speed in the cylinder, an external p.o.check valve capable of handling the system flow and end pressure can be inserted in parallel with the MP-L intensifier

FIG.1

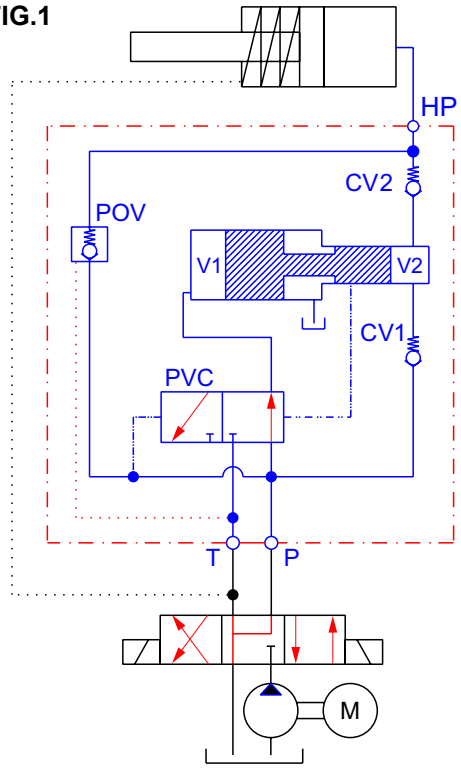

Intensification ratios, flow and pressure settings

Product number*	Intensification ratio	Max. supply Flow** (LPM)	Inlet supply pressure*** (bar)	Average outlet Flow**** (LPM)	Outlet pressure range***** (bar)
MP-L-2.0	2.0	80.0	200	13.0	40 - 400
MP-L-3.4	3.4	80.0	200	13.0	51 - 680
MP-L-4.0	4.0	80.0	200	11.0	80 - 800
MP-L-5.0	5.0	80.0	160	8.0	100 - 800
MP-L-7.0	7.0	80.0	114	6.3	140 - 800

* The MP-L intensifiers have the p.o. check valve POV is integrated.

** Max. supply flow limits not to be exceeded, as this will damage the internal check valves and over speed the intensifier pistons.
Min. supply flow is 8 LPM

*** Max. supply pressure limits not to be exceeded, as this will cause damage to the intensifier parts, and will cause to high outlet pressure.
Pressure spikes must be avoided.

**** The Average flow is the flow generated by the intensifier pistons when increasing the pressure from pump pressure to end pressure. Initially the flow is high, and as the pressure increases the flow decreases and will eventually stop when the end pressure has been reached.

***** The outlet pressure is proportional with the supplied pressure, and can be set at any value within the range. The max. pressure within the range for each intensification ratio must not be exceeded.

ScanWill®
More Pressure. More Power



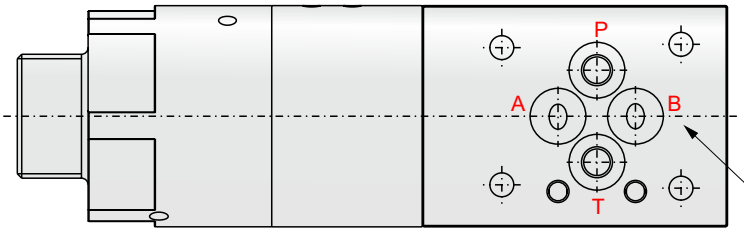

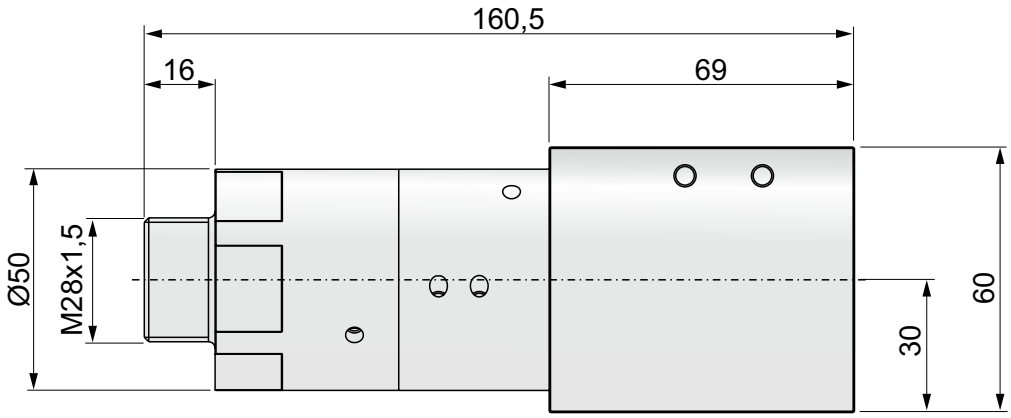

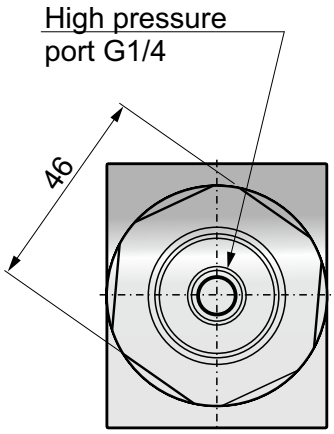

Before installing the intensifier

Ensure the surroundings and the connecting parts are clean and free from burrs.

Filtration requirements

10 µm nominal or better, maximum 19/16 according to ISO 4406

Fluids

For use with standard hydraulic oils and water glycol (min. 5% glycol).
Preferred viscosity range 20 - 46 cSt

Hydraulic bleeding

During start-up of the system, it is recommended to ensure no air is trapped in the system, as this may cause function problems.

Connecting the intensifier

Connecting the MP-CT pressure intensifier to a system is only to be done by trained personnel.
The MP-CT is designed for the cetop D03 (NG6) stacking system. To make the MP-T increase a supplied pressure, the A-port must be connected to the supply pressure and the B-port connected to tank. The HP - port is to be connected to the cylinder/part requiring higher pressure.

CAUTION:
Ensure the fittings and components on the output side are rated for the end pressure delivered by the Scanwill intensifier.

Connecting the intensifier

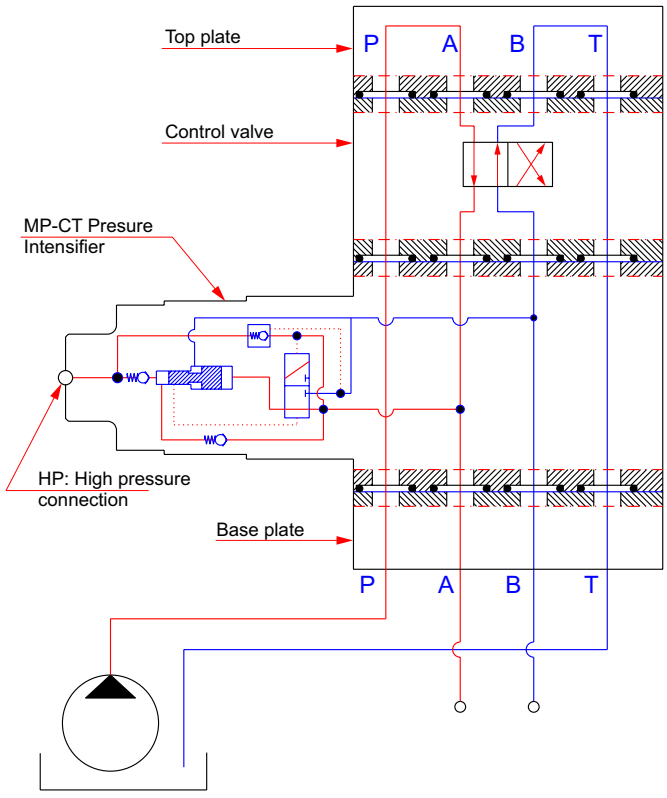

Function

The MP-CT is a hydraulic pressure intensifier designed to be inserted in a CETP 3 /NG6 system, where it will provide a higher output pressure in the HP-port only, the pressure in the CETOP 3 /NG6 system will not be increased. The pressure in port HP will be increased proportionally with the supplied pressure by a fixed factor, the intensification ratio of the specific MP-CT pressure intensifier. The higher pressure can be used to operate a cylinder or tool requiring more pressure than the present system pressure.
The evacuation of the higher pressure can be achieved through a pilot operated checkvalve within the MP-CT. This is opened by switching the pump pressure from port A to port B, thus opening a passage from the high pressure side through the MP-CT pressure intensifier back to tank.

Fig. 1 shows the intensifier circuit of the MP-CT intensifier increasing the pressure in a single or double acting cylinder.
When applying flow to the A-port and connecting the B-port to tank, the full pump flow will go straight through the intensifier check valves CV1, CV2 and POV (optional) to the cylinder, allowing the rod to move out at pump speed. When the cylinder is filled up and the pressure has risen to pump pressure, the intensifier pistons automatically increase the pressure to the set end pressure. Keeping the pump connected ensures the intensifier will automatically work to maintain the end pressure in the cylinder, in case the pressure drops.

If the POV is integrated in the MP-CT pressure intensifier in use, the cylinder can be retracted by connecting the A-port to tank and the B port to pump. This will open the POV creating a free passage from the HP-side back to tank.

FIG.1

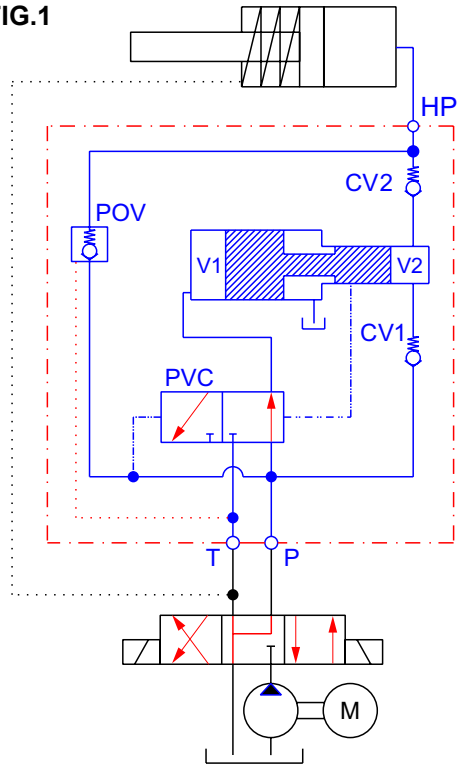

Intensification ratios, flow and pressure settings

Product number*	Intensification ratio	Max. supply Flow** (LPM)	Outlet supply pressure*** (bar)	Average outlet Flow**** (LPM)	Outlet pressure range***** (bar)
MP-CT-S/P-1.5-G/U	1.5	15.0	200	0.3	30 - 300
MP-CT-S/P-2.0-G/U	2.0	15.0	200	0.5	40 - 400
MP-CT-S/P-2.8-G/U	2.8	8.0	200	0.3	56 - 560
MP-CT-S/P-3.4-G/U	3.4	15.0	200	0.5	68 - 680
MP-CT-S/P-4.0-G/U	4.0	14.0	200	0.4	80 - 800
MP-CT-S/P-5.0-G/U	5.0	14.0	160	0.3	100 - 800
MP-CT-S/P-7.0-G/U	7.0	13.0	114	0.2	140 - 800
MP-CT-S/P-9.0-G/U	9.0	13.0	89	0.1	180 - 800
MP-CT-S/P-13.0-G/U	13.0	10.0	61	0.1	260 - 800

*S means intensification only,
P means the p.o. check valve POV for evacuating the high pressure side integrated.

** G: The HP connection is G1/4”
U: The HP connection is G1/4”

*** Max. supply flow limits not to be exceeded, as this will damage the internal check valves and over speed the intensifier pistons.
Min. supply flow is 2 LPM

**** Max. supply pressure limits not to be exceeded, as this will cause damage to the intensifier parts, and will cause to high outlet pressure.
Pressure spikes must be avoided.
The Average flow is the flow generated by the intensifier pistons when increasing the pressure from pump pressure to end pressure. Initially the flow is high, and as the pressure increases the flow decreases and will eventually stop when the end pressure has been reached.

***** The outlet pressure is proportional with the supplied pressure, and can be set at any value within the range.
The max. pressure within the range for each intensification ratio must not be exceeded.

ScanWill®
More Pressure. More Power



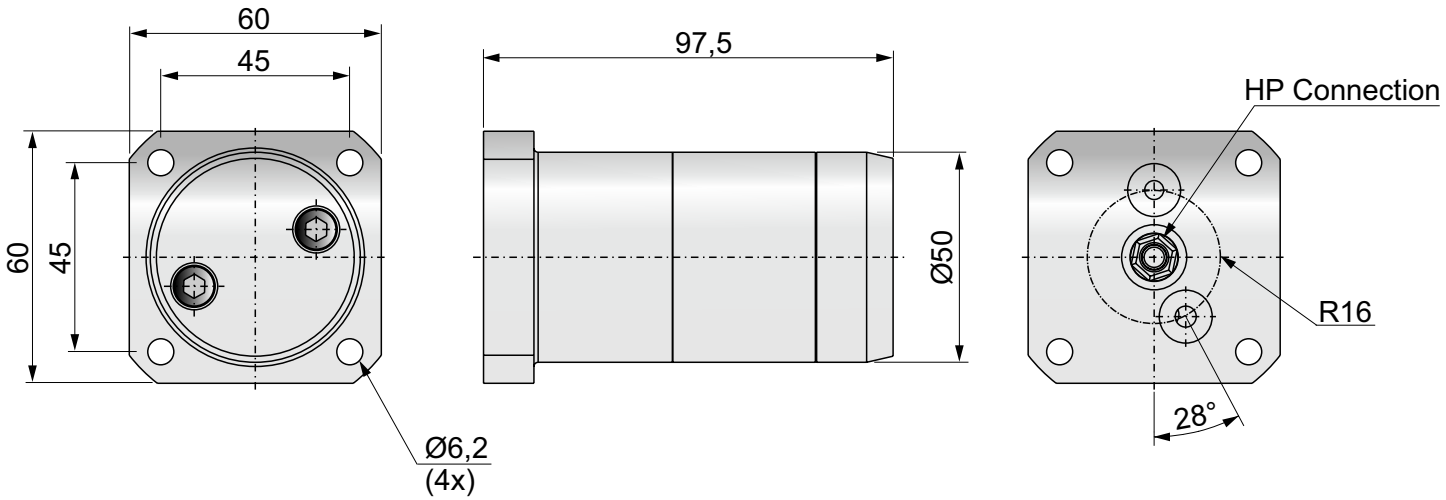

Before installing the intensifier

Ensure the surroundings and the connecting parts are clean and free from burrs.

Fluids

For use with standard hydraulic oils and water glycol (min. 5% glycol).
Preferred viscosity range 20 - 46 cSt

Filtration requirements

10 µm nominal or better, maximum 19/16 according to ISO 4406

Hydraulic bleeding

During start-up of the system, it is recommended to ensure no air is trapped in the system, as this may cause function problems.

Seals

HP: Kantseal DKAR00014
P & T: O-ring 9,25x1,78 NBR90

Mounting to a customer block

The MP-F pressure intensifier is designed to be mounted on the side of a hydraulic block. The P and T ports are connected to A and B, and the discharge HP is providing higher pressure back into the block. The MP-F is fixated by 4 x M6 or similar sized screws

CAUTION:

Ensure the fittings and components on the output side are rated for the end pressure delivered by the Scanwill intensifier.

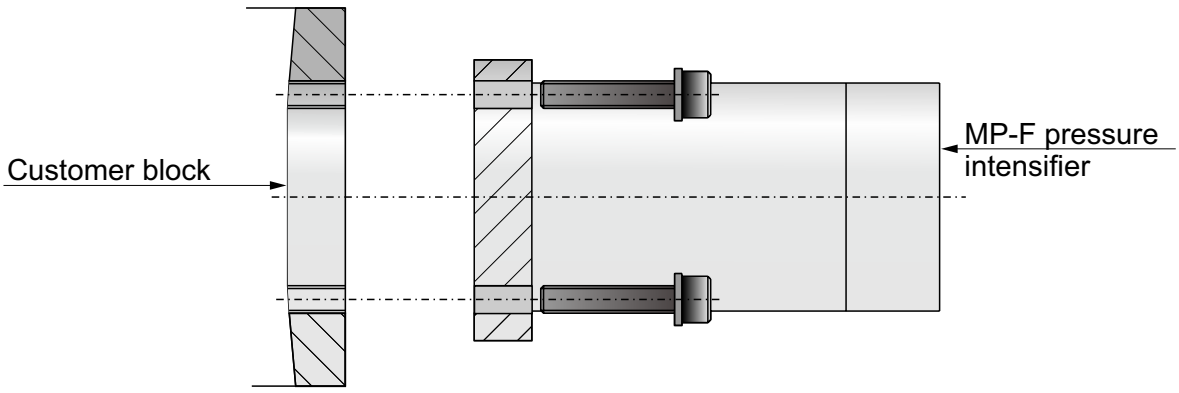

Function

The MP-F is a flange-on hydraulic pressure intensifier designed to increase a supplied pump pressure to a higher end pressure (for fluids only). The intensification ratio is fixed, and the end pressure is always proportional with the supplied pressure. Fig. 1 shows the schematic of the MP-F intensifier increasing the pressure in a single or double acting cylinder.
When applying flow to the P-port and connecting the T-port to tank, the full pump flow will go straight through the intensifier check valves CV1, CV2 and POV (optional) to the cylinder, allowing the rod to move out at pump speed. When the cylinder is filled up and the pressure has risen to pump pressure, the intensifier pistons automatically increase the pressure to the set end pressure. Keeping the pump connected ensures the intensifier will automatically work to maintain the end pressure in the cylinder, in case the pressure drops.
If the POV is integrated the cylinder can be retracted by connecting the P-port to tank and the T-port to pump. This will open the POV creating a free passage from the HP-side back to tank.

FIG.1

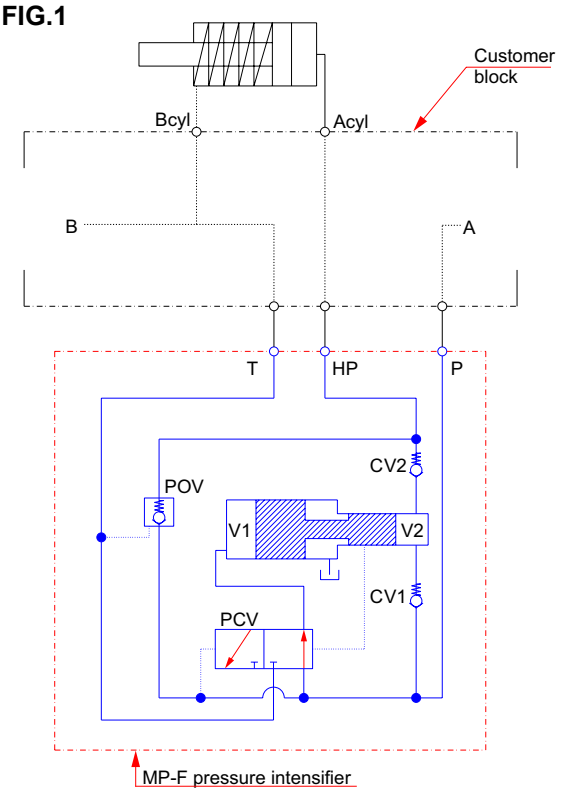

Intensification ratios, flow and pressure settings

Product number*	Intensification ratio	Max. supply Flow** (LPM)	Inlet supply pressure*** (bar)	Average outlet Flow**** (LPM)	Outlet pressure range***** (bar)
MP-F-1.5 / MP-F-1.5-S	1.5	15.0	200	0.3	30 - 300
MP-F-2.0 / MP-F-2.0-S	2.0	15.0	200	0.5	40 - 400
MP-F-2.8 / MP-F-2.8-S	2.8	8.0	200	0.3	56 - 560
MP-F-3.4 / MP-F-3.4-S	3.4	15.0	200	0.5	68 - 680
MP-F-4.0 / MP-F-4.0-S	4.0	14.0	175	0.4	80 - 700
MP-F-5.0 / MP-F-5.0-S	5.0	14.0	140	0.3	100 - 700
MP-F-7.0 / MP-F-7.0-S	7.0	13.0	100	0.2	140 - 700
MP-F-9.0 / MP-F-9.0-S	9.0	13.0	78	0.1	180 - 700

* S means intensification only, (no p.o. check valve POV is integrated)

** Max. supply flow limits not to be exceeded, as this will damage the internal check valves and over speed the intensifier pistons.
Min. supply flow is 2 LPM

*** Max. supply pressure limits not to be exceeded, as this will cause damage to the intensifier parts, and will cause to high outlet pressure.
Pressure spikes must be avoided.

**** The Average flow is the flow generated by the intensifier pistons when increasing the pressure from pump pressure to end pressure. Initially the flow is high, and as the pressure increases the flow decreases and will eventually stop when the end pressure has been reached.

***** The outlet pressure is proportional with the supplied pressure, and can be set at any value within the range.
The max. pressure within the range for each intensification ratio must not be exceeded.

Pressure Intensifier

MP-2000 (High Pressure)



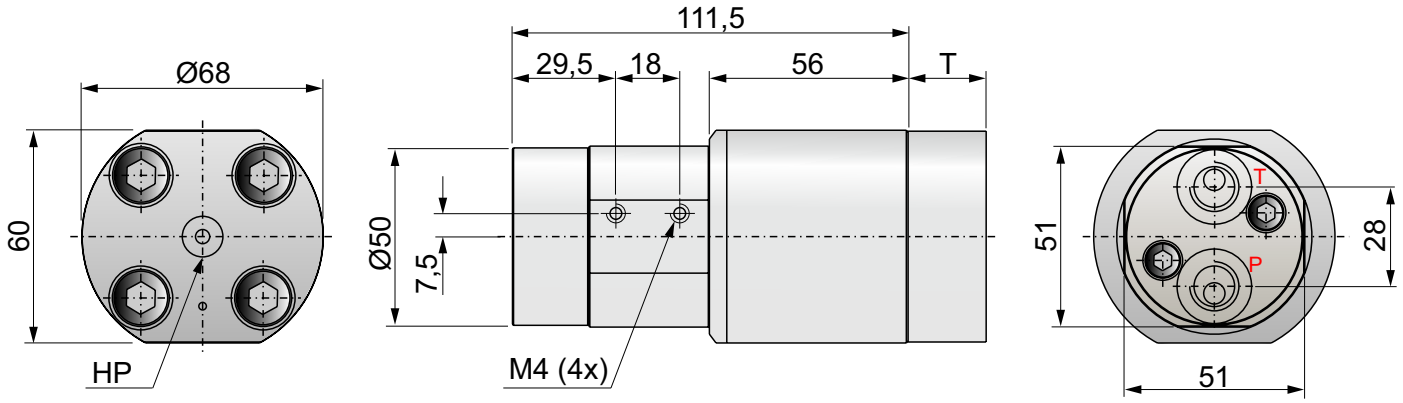

Port sizes
P and T: G1/4" (1/4" BSPP) or 7/16"-20 UNF
HP: See below

Before installing the intensifier

Ensure the surroundings and the connecting parts are clean and free from burrs.

Fluids

For use with standard hydraulic oils and water glycol (min. 5% glycol).
Preferred viscosity range 20 - 46 cSt

Filtration requirements

10 µm nominal or better, maximum 19/16 according to ISO 4406

Hydraulic bleeding

During start-up of the system, it is recommended to ensure no air is trapped in the system, as this may cause function problems.

Connecting the intensifier

Connecting the MP-2000 pressure intensifier to a system is only to be done by trained personnel.
1. Connect the P-port of the intensifier to the hydraulic pressure supply.
2. Connect the T-port to the tank line.
3. Connect the HP-port to the end pressure line /cylinder.

Mounting and connection

The MP-2000 pressure intensifier can be mounted using a standard pipe clamp. Alternatively the accessories below for fixating and connecting the intensifier are available.



Mounting brackets for base plate



Connection kit for block mounting

HP-Port sizes

The HP port (outlet pressure) has several options, all of them sealing at a cone at the end of the bore. Most common are:
9/16"-18 UNF with 60° cone sealing and
G1/4" (1/4" BSPP) with 120° cone sealing

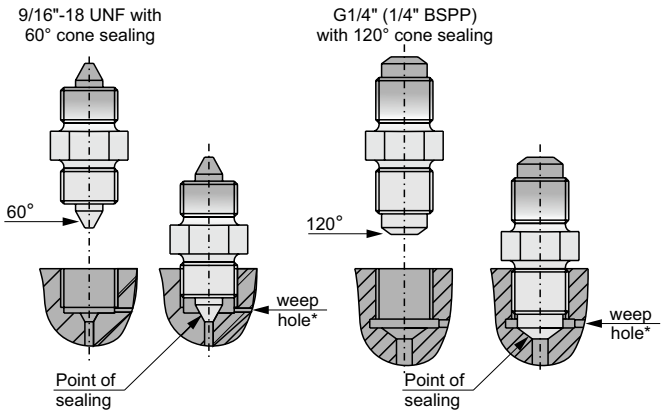

* The weep hole is a safety measure to ensure the full high pressure is not acting on the thread. If oil/fluid is comming out of the weep hole, this is a sign that the connection is loose, and needs to be tightened.

Pressure Intensifier

MP-2000 (High Pressure)

Function

The MP-2000 is an in-line hydraulic pressure intensifier designed to increase a supplied pump pressure to a higher end pressure (for fluids only). The intensification ratio is fixed, and the end pressure is always proportional with the supplied pressure. Fig. 1 shows the schematic of the MP-2000 intensifier increasing the pressure in a single or double acting cylinder.

When applying flow to the P-port and connecting the T-port to tank, the full pump flow will go straight through the intensifier check valves CV1, CV2 and POV (optional) to the cylinder, allowing the rod to move out at pump speed. When the cylinder is filled up and the pressure has risen to pump pressure, the intensifier pistons automatically increase the pressure to the set end pressure. Keeping the pump connected ensures the intensifier will automatically work to maintain the end pressure in the cylinder, in case the pressure drops.

If the POV is integrated the cylinder can be retracted by connecting the P-port to tank and the T-port to pump. This will open the POV creating a free passage from the HP-side back to tank.

High Flow Applications

In systems with flow rates larger than permissible for the intensifier, the inlet to the P and T ports must be limited according to the flow pressure table below. To maintain the speed in the cylinder, an external p.o.check valve capable of handling the system flow and end pressure can be inserted in parallel with the MP-2000 hydraulic pressure intensifier

FIG.1

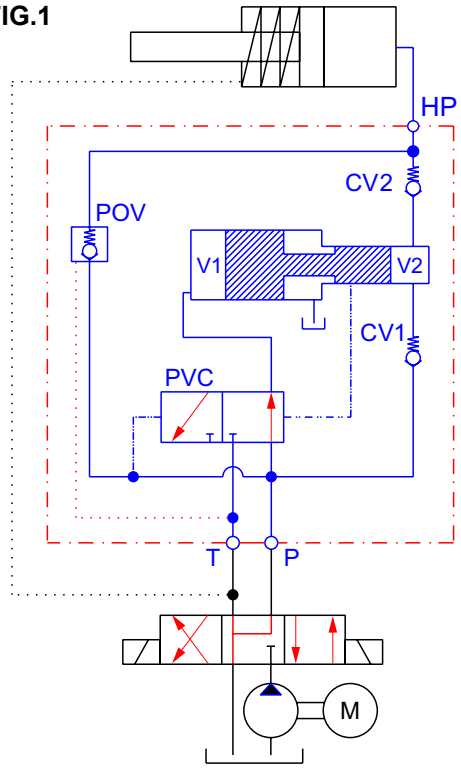

Intensification ratios, flow and pressure settings

Product number*	Intensification ratio	Max. supply Flow** (LPM)	Outlet supply pressure*** (bar)	Average outlet Flow**** (LPM)	Outlet pressure range***** (bar)
MP-2000-S-P-7.0	7.0	13.0	200	0.2	140 - 1,400
MP-2000-S-P-10.0	10.0	12.0	200	0.2	200 - 2,000
MP-2000-S-P-13.0	13.0	10.0	200	0.1	260 - 2,600
MP-2000-S-P-16.0	16.0	10.0	188	0.1	320 - 3,000

* S means intensification only, P means the p.o. check valve POV is integrated.

** Max. supply flow limits not to be exceeded, as this will damage the internal check valves and over speed the intensifier pistons.
Min. supply flow is 2 LPM

*** Max. supply pressure limits not to be exceeded, as this will cause damage to the intensifier parts, and will cause to high outlet pressure.
Pressure spikes must be avoided.

**** The Average flow is the flow generated by the intensifier pistons when increasing the pressure from pump pressure to end pressure. Initially the flow is high, and as the pressure increases the flow decreases and will eventually stop when the end pressure has been reached.

***** The outlet pressure is proportional with the supplied pressure, and can be set at any value within the range.
The max. pressure within the range for each intensification ratio must not be exceeded.