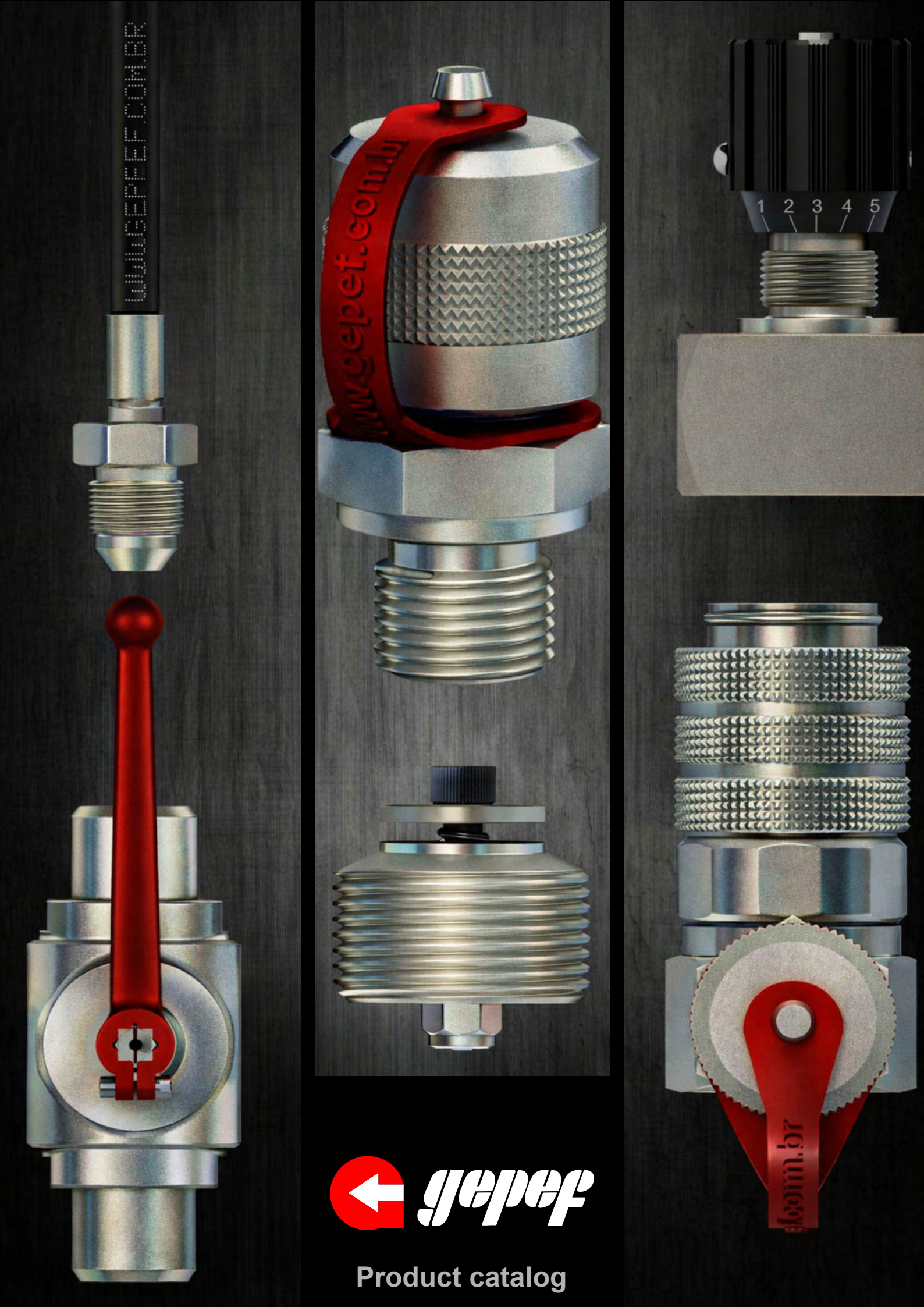

gepef

Product catalog

INDEX

Products	Page
About us / Our facilites	3
Pressure Gauge Adapters	4
Plugs	13
Manifold Block Component	18
Special Test Connectors	22
Hydrogen Refueling Connectors	65
Hydraulic Fittings	213
Diagnostic Quick Coupling	217
Pressure Intensifier	225
Pressure Test Kits	245
Capillary Hoses	253
High-Pressure Water Jetting Hose / Pipe and Sewer Cleaning	265
Offshore Hoses	274
Thermoplastic Hoses	281
Pressure Gauge and Vacuum Gauge	297
Expander Sealing Plugs	301
Refrigeration	312
Pressure Test Points	342
Flow Control Valve	365
Ball Valve	372
Hydrogen Valve	405
Check Valves	431
Pilot Operated Check Valve	446
Safety Valve (Parachute)	450
Inline Sequence Valve	455
Drain Valve	458

ABOUT US

A **GEPEF** We are a Brazilian company founded in 1977 specializing in hydraulic products designed to measure, test, transmit, and control fluids. Our products are widely used in various sectors such as machinery and equipment, agriculture, forestry, energy, steelmaking, mining, the chemical industry, and offshore operations. We serve the entire national and international market.

Our goal is to guarantee the high performance of our products and services. The company applies a rigorous quality management system, based on international standards, such as... **ISO 9001**, with the goal of meeting customer requirements and exceeding their expectations.

We have been ISO 9001 certified since 2004.

With this management system, the **GEPEF** It positions itself as a benchmark in highly reliable and durable products, serving sectors where quality cannot be compromised.

At Gepef, we understand that technology is one of the fundamental pillars for excellence in production. That's why we invest in state-of-the-art CNC machines, which offer precision, efficiency, and flexibility to meet the demands of today's market.

Our CNC machines enable the automation of manufacturing processes, reducing errors and increasing productivity. Furthermore, our team of experts is always up-to-date on best practices and techniques, ensuring that each project is executed to the highest quality standards. At Gepef, we believe that investing in technology is investing in the future, and our CNC machines are proof of that.

Contact us and learn more!

Our Facilities



Av. Antônio Ângelo Amadio 681 (Head Office)



Avenida do Trabalhador, 1.680 (Operations Center)



Avenida Professor Mário Werneck, 300 (Branch Office)













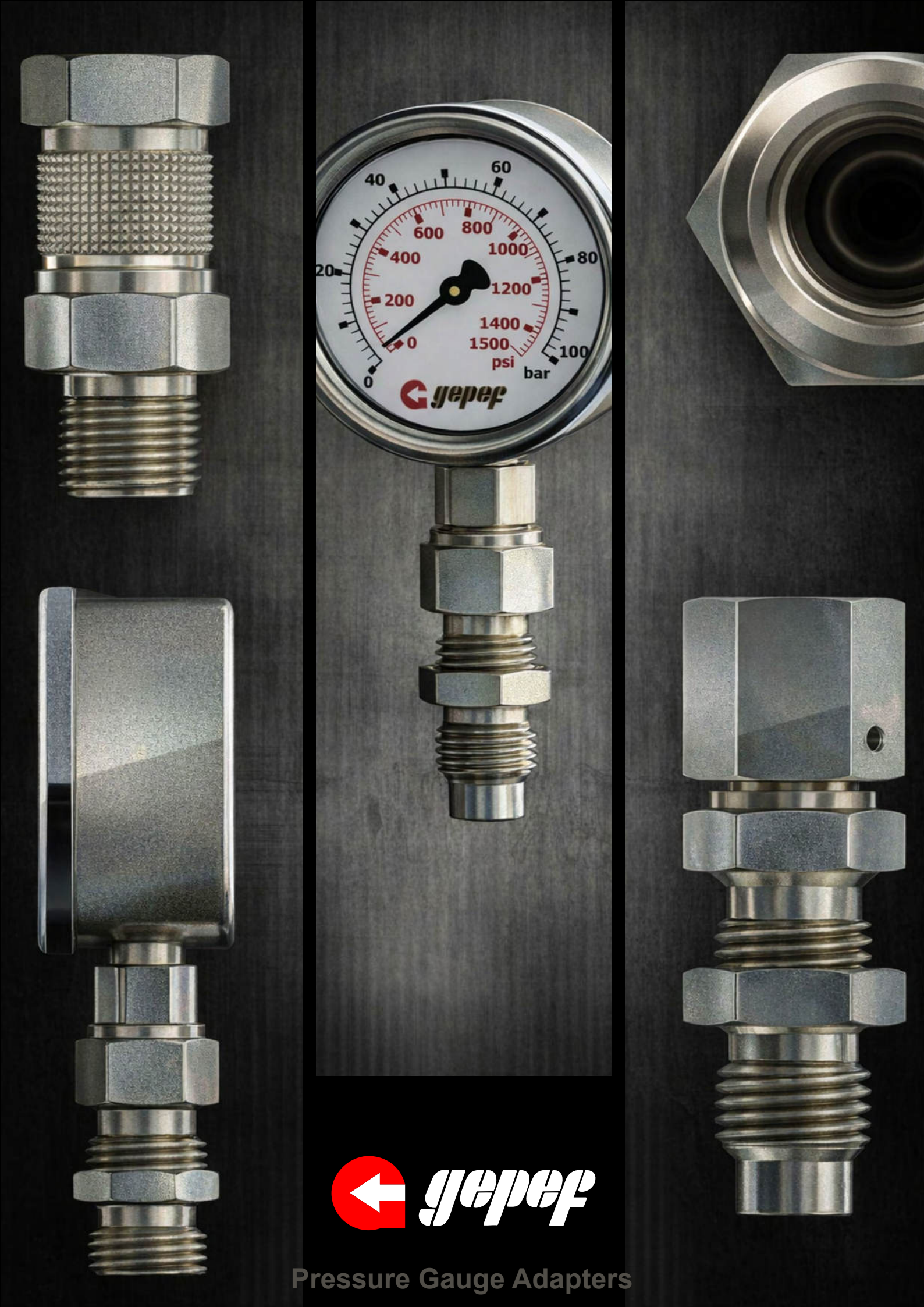

gepef

Pressure Gauge Adapters

PRESSURE GAUGE ADAPTERS

Pressure Gauge Adapters are designed for the interconnection of pressure gauges and pressure transducers with system components such as capillary test hoses, pressure test points, tubes, and related fittings.
They can be used in manual operation, mounted on brackets, or installed on panels. An optional swivel system allows the pressure gauge to be oriented for optimal readability and installation flexibility.
If the required adapter configuration is not available in this catalog, please contact us.

Note: All pressure gauge adapters are supplied without an internal valve.

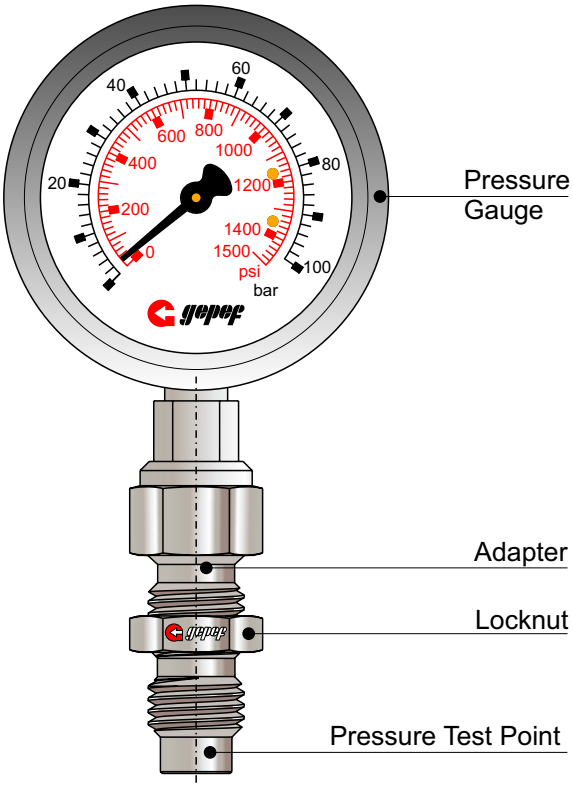

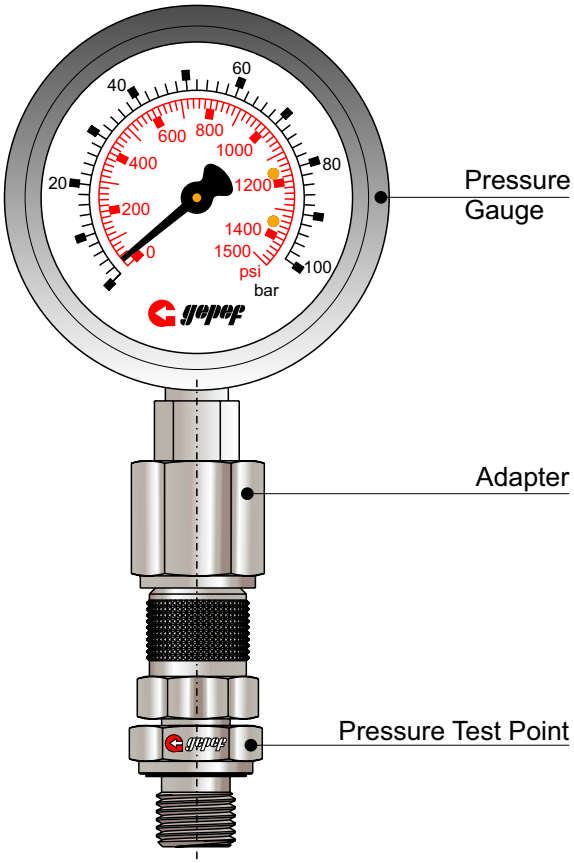

According to
ISO 15171-2

Metal Parts
Carbon Steel
Stainless Steel AISI 316

Working Pressure
Up to 630 bar / 9137 PSI

Surface Treatmen
White trivalent zinc plating (Cr VI–free)
Zinc-nickel plating
Olive green finish

Seals & Operating Temperature
NBR / Buna-N (-25°C up to 100°C) (-13°F up to +212°F) - (Standard)
(FKM) Viton (-15°C up to 200°C) (-5°F up to +392°F) - **V**
EPDM (-40°C up to 150°C) (-40°F up to +302°F) - **E**

Fluid Compatibility
Hydraulic oils and other mineral-based fluids
Compatibility with other fluids: on request
Gases – please consult

Adapter for Capillary Hose Connection

ADMM



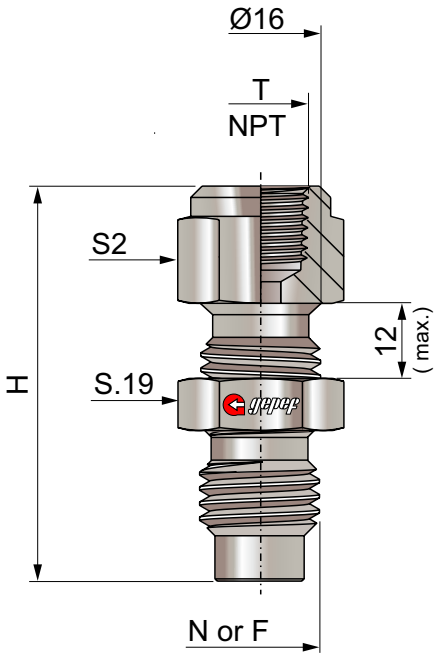

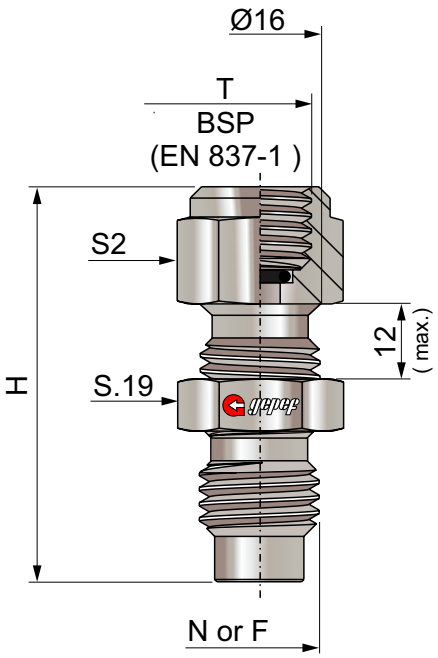

N or F Thread
N - M16x2
F - M16x1,5

Thread Type: T	S2	H
ADMM 1/8 NPT	19	55
ADMM 1/4 NPT	19	55
ADMM 1/2 NPT	27	60
ADMM G1/8 BSP	19	55
ADMM G1/4 BSP	19	55
ADMM G1/2 BSP	27	60

Coding Example:

N-ADMM 1/8 NPT (Adapter for connection to M16×2 capillary hose, with 1/8 NPT female thread).

For AISI 316 stainless steel, add the letter I at the end of the code.

For Viton (FKM) or EPDM seals, add the letter V or E at the end of the code.

If you require a different adapter configuration not listed in this catalog, please contact our Technical Department.

Female Adapter for Direct Connection

ADMT



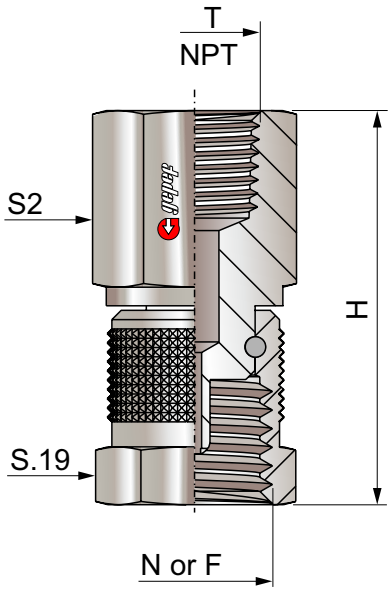

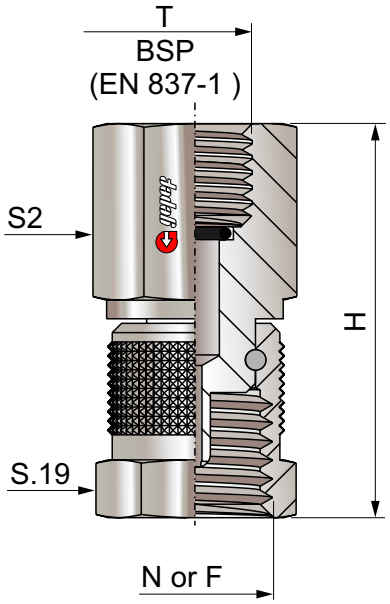

N or F Thread
N - M16x2
F - M16x1,5

Thread Type: T	S2	H
ADMT 1/4 NPT	19	44
ADMT 1/2 NPT	27	48
ADMT G1/4 BSP	19	44
ADMT G1/2 BSP	27	48

Coding Example:

N-ADMT G1/2 BSP (Female adapter for direct assembly to M16×2, with G1/2 BSP female thread).

For AISI 316 stainless steel, add the letter I at the end of the code.

For Viton (FKM) or EPDM seals, add the letter V or E at the end of the code.

If you require a different adapter configuration not listed in this catalog, please contact our Technical Department.

Female Adapter for Direct Connection — ADMF



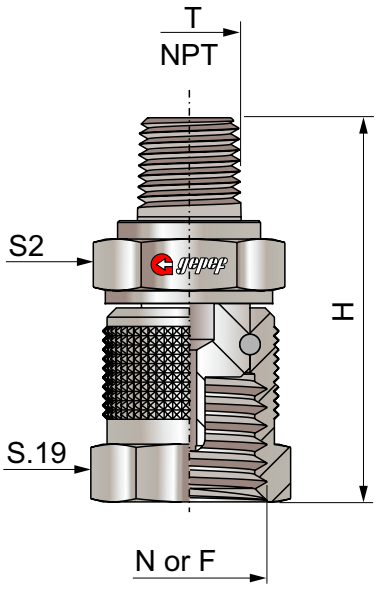

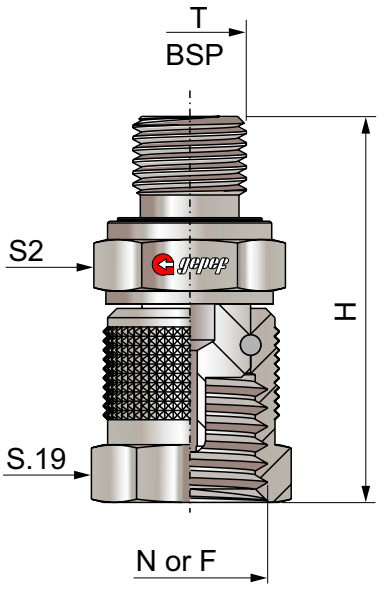

N or F Thread
N - M16x2
F - M16x1,5

Thread Type: T	S2	H	Form
ADMF 1/8 NPT	17	42	C
ADMF 1/4 NPT	17	42	C
ADMF 3/8 NPT	19	44	C
ADMF 1/2 NPT	22	45	C
ADMF G1/4 BSP	19	42	WD / O
ADMF G3/8 BSP	22	44	WD / O
ADMF G1/2 BSP	27	45	WD / O
ADMF M12x1,5	17	42	WD / O
ADMF M14x1,5	19	42	WD / O
ADMF M16x1,5	22	44	WD / O
ADMF M18x1,5	24	45	WD / O

Type O	Type C	Type WD
ISO 6149-2 / -3 Metric Thread	DIN 3852-2 - BSPT Thread	ISO 1179-2 - BSP Thread
ISO 11926-2 / -3 UNF Thread	ANSI / ASME B1.20.1-1983 - NPT Thread	ISO 9974-2 - Metric Thread

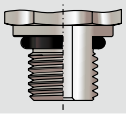
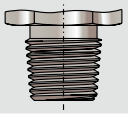
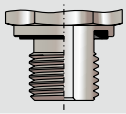

Coding Example:

N-ADMF 1/8 NPT (Male–female adapter for direct connection to M16×2, with 1/8 NPT male thread).

For AISI 316 stainless steel, add the letter I at the end of the code.

For Viton (FKM) or EPDM seals, add the letter V or E at the end of the code.

If you require a different adapter configuration not listed in this catalog, please contact our Technical Department.

AOM BSP / NPT



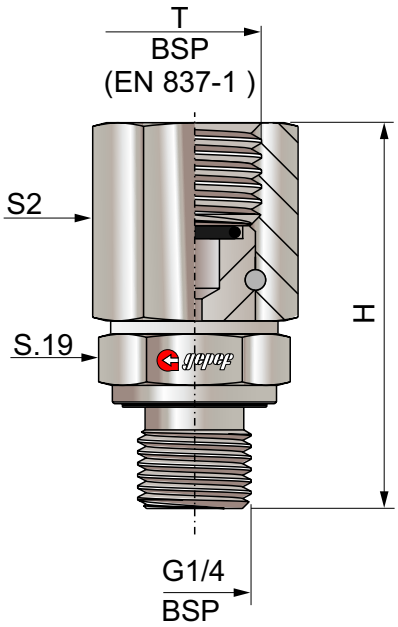

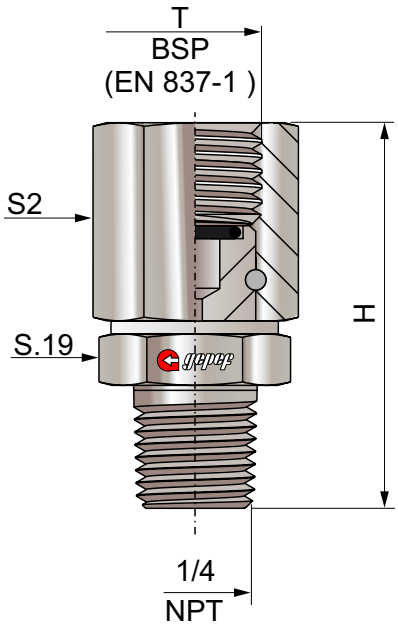

Thread Type: T	S2	H
AOM 1/4 NPT	17	43
AOM 1/2 NPT	22	47
AOM G1/4 BSP	19	41
AOM G1/2 BSP	27	46

Type O	Type C	Type WD
ISO 6149-2 / -3 Metric Thread	DIN 3852-2 - BSPT Thread	ISO 1179-2 - BSP Thread
ISO 11926-2 / -3 UNF Thread	ANSI / ASME B1.20.1-1983 - NPT Thread	ISO 9974-2 - Metric Thread
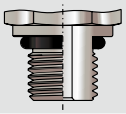	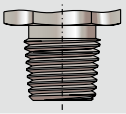	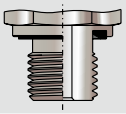

Coding Example:
AOM G1/4 BSP (Swivel adapter for 1/4 BSP pressure gauge, with 1/4 BSP female thread).
For AISI 316 stainless steel, add the letter I at the end of the code.
For Viton (FKM) or EPDM seals, add the letter V or E at the end of the code.
If you require a different adapter configuration not listed in this catalog, please contact our Technical Department.

AOM 24° DIN 2353



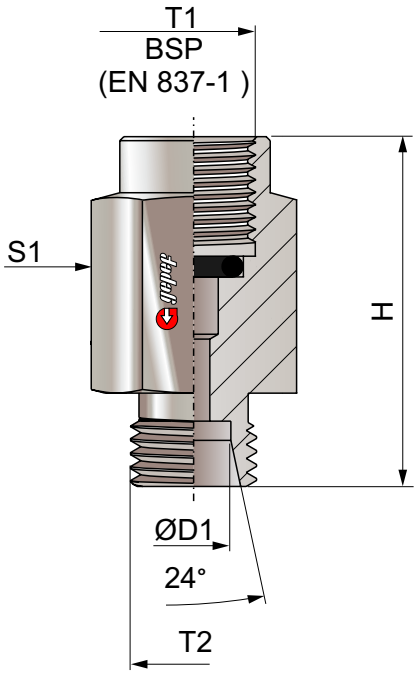

EN 837-1 / DIN 2353 L Series						
Code	T1	T2	D1	S1	H	Working Pressure
AOM G1/4x6LM	G1/4 BSP	M12x1,5	6	19	29	315 bar / 4568 PSI
AOM G1/4x8LM	G1/4 BSP	M14x1,5	8	19	29	315 bar / 4568 PSI
AOM G1/4x10LM	G1/4 BSP	M16x1,5	10	19	30	315 bar / 4568 PSI
AOM G1/4x12LM	G1/4 BSP	M18x1,5	12	19	30	315 bar / 4568 PSI

EN 837-1 / DIN 2353 S Series						
Code	T1	T2	D1	S1	H	Working Pressure
AOM G1/4x6SM	G1/4 BSP	M14x1,5	6	19	30	630 bar / 9137 PSI
AOM G1/4x8SM	G1/4 BSP	M16x1,5	8	19	30	630 bar / 9137 PSI
AOM G1/4x10SM	G1/4 BSP	M18x1,5	10	19	31	630 bar / 9137 PSI
AOM G1/4x12SM	G1/4 BSP	M20x1,5	12	19	31	630 bar / 9137 PSI

Coding Example:

AOM G1/4x6LM (1/4 BSP pressure gauge adapter, with M12×1.5 male thread).

For AISI 316 stainless steel, add the letter I at the end of the code.

For Viton (FKM) or EPDM seals, add the letter V or E at the end of the code.

If you require a different adapter configuration not listed in this catalog, please contact our Technical Department.

AOM 24° DIN 3865



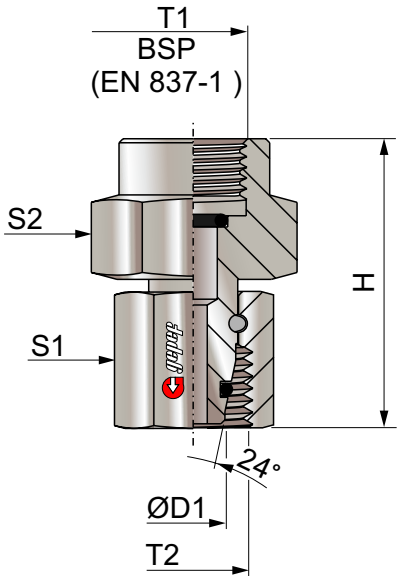

EN 837-1 / DIN 3865 L Series							
Code	T1	T2	D1	S1	S2	H	Working Pressure
AOM G1/4x6LF	G1/4 BSP	M12x1,5	6	19	17	37	315 bar / 4568 PSI
AOM G1/4x8LF	G1/4 BSP	M14x1,5	8	19	17	37	315 bar / 4568 PSI
AOM G1/4x10LF	G1/4 BSP	M16x1,5	10	19	19	37	315 bar / 4568 PSI
AOM G1/4x12LF	G1/4 BSP	M18x1,5	12	19	22	37	315 bar / 4568 PSI

EN 837-1 / DIN 3865 S Series							
Code	T1	T2	D1	S1	S2	H	Working Pressure
AOM G1/4x6SF	G1/4 BSP	M14x1,5	6	19	17	37	630 bar / 9137 PSI
AOM G1/4x8SF	G1/4 BSP	M16x1,5	8	19	19	37	630 bar / 9137 PSI
AOM G1/4x10SF	G1/4 BSP	M18x1,5	10	19	22	40	630 bar / 9137 PSI
AOM G1/4x12SF	G1/4 BSP	M20x1,5	12	19	22	40	630 bar / 9137 PSI

Coding Example:

AOM G1/4x6LM (1/4 BSP pressure gauge adapter, with M12×1.5 female thread).

For AISI 316 stainless steel, add the letter I at the end of the code.

For Viton (FKM) or EPDM seals, add the letter V or E at the end of the code.

If you require a different adapter configuration not listed in this catalog, please contact our Technical Department.

Pressure Gauge Swivel Adapter for Panel

ADAOM



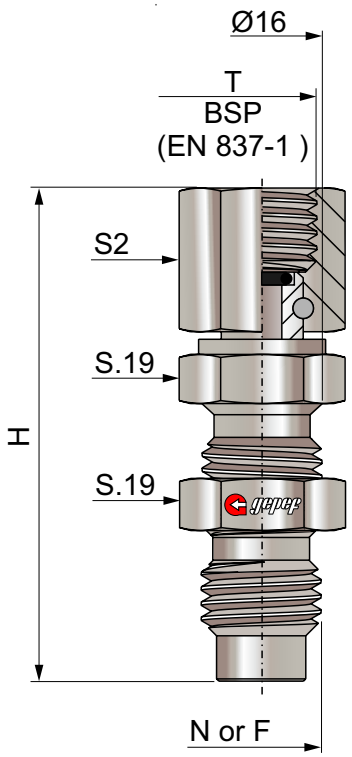

N or F Thread	Thread Type: T	S2	H
N - M16x2	ADAOM G1/4 BSP	19	65
F - M16x1,5	ADAOM G1/2 BSP	27	68

Coding Example:

N-ADAOM G1/2 BSP (Pressure gauge swivel adapter for panel and M16×2 pressure gauge, with G1/2 BSP female thread).

For AISI 316 stainless steel, add the letter I at the end of the code.

For Viton (FKM) or EPDM seals, add the letter V or E at the end of the code.

If you require a different adapter configuration not listed in this catalog, please contact our Technical Department.

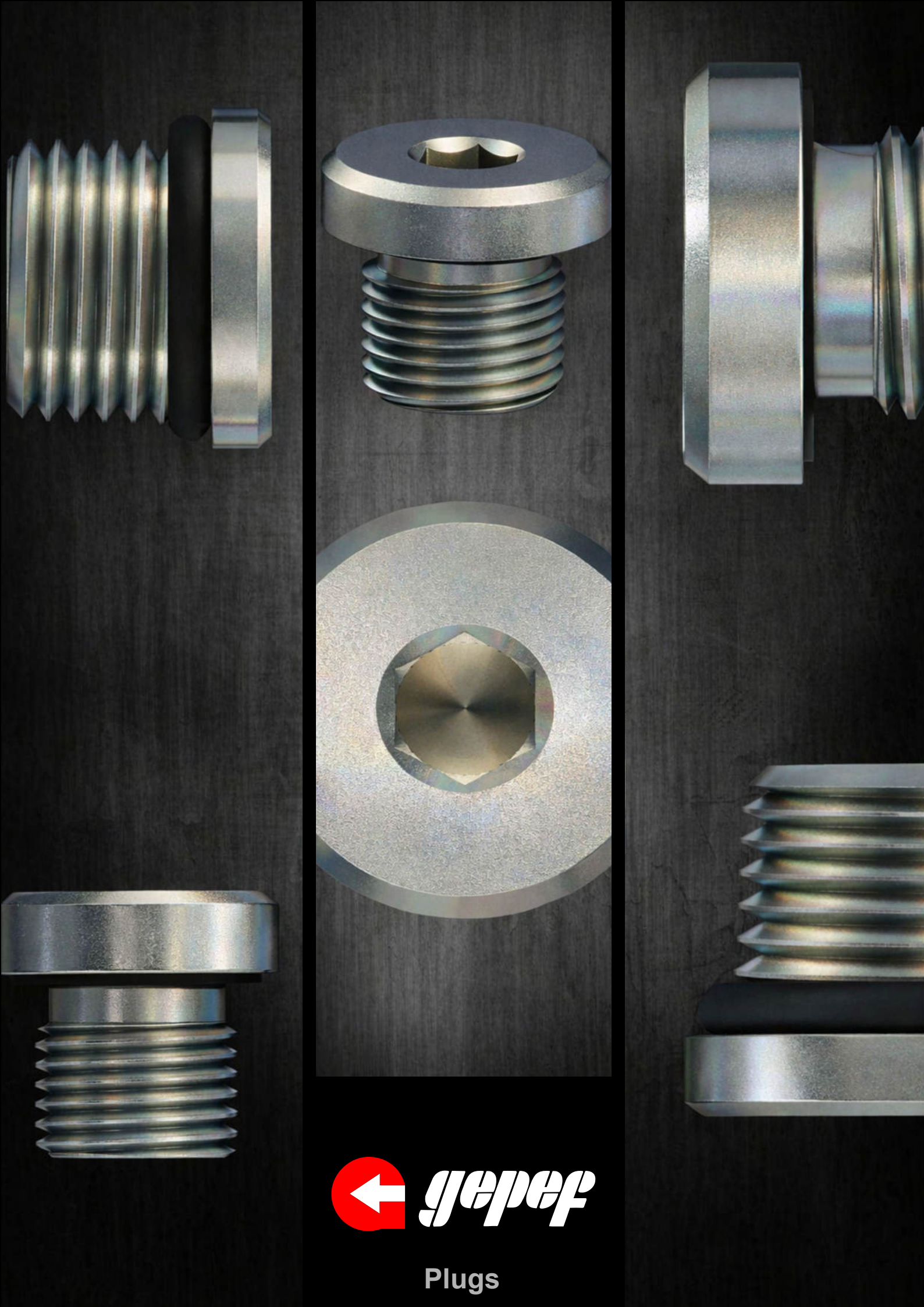

gepef

Plugs

Internal Hex Threaded Plugs

Internal hex threaded plugs are manufactured in accordance with DIN 908, SAE J1926, SAE J476, ISO 11926, ISO 6149, ISO 9974, ISO 1179, as well as BSP, NPT, UNF, and Metric thread standards. They are available in carbon steel and stainless steel, providing reliable sealing performance in hydraulic and industrial applications.
Surface treatment options include white trivalent zinc plating (Cr VI–free) and zinc-nickel coating, ensuring enhanced corrosion resistance and compliance with environmental regulations.

For additional specifications or custom requirements, please contact us.



Materials
Carbon Steel
Stainless Steel AISI 316

Surface Treatment
White trivalent zinc plating (Cr VI–free)
Zinc-nickel plating

Seals & Operating Temperature
NBR / Buna-N (-25°C up to 100°C) (-13°F up to +212°F) - (Standard)
(FKM) Viton (-15°C up to 200°C) (-5°F up to +392°F) - **V**
EPDM (-40°C up to 150°C) (-40°F up to +302°F) - **E**

Fluid Compatibility
Hydraulic oils and other mineral-based fluids
Refer to the seal chemical compatibility chart

Internal Hex Threaded BSP Plugs ISO 1179

BJSI - BSP



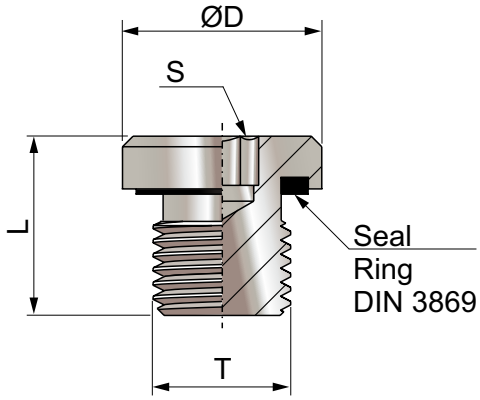

ISO 1179					
Thread Type: T	D	S	L	Working Pressure	Weight (g)
BJSI G1/8	14	5	12	400 bar / 5801 PSI	8
BJSI G1/4	19	6	17	400 bar / 5801 PSI	20
BJSI G3/8	22	8	17	400 bar / 5801 PSI	25
BJSI G1/2	27	10	19	400 bar / 5801 PSI	51
BJSI G3/4	32	12	21	400 bar / 5801 PSI	79
BJSI G1	40	17	21	400 bar / 5801 PSI	130
BJSI G1 1/4	50	22	23	315 bar / 4568 PSI	198
BJSI G1 1/2	55	24	23	315 bar / 4568 PSI	263

Internal Hex Threaded BSP Plugs ISO 9974

BJSI – Metric Thread ISO 9974



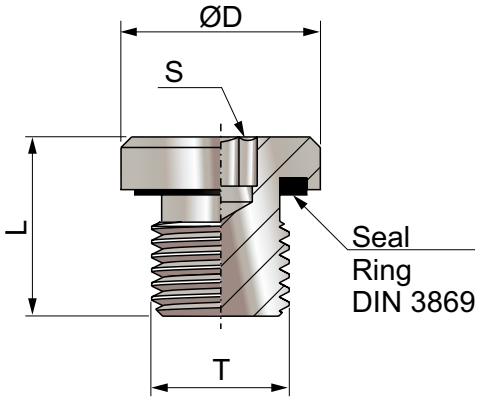

ISO 9974					
Thread Type: T	D	S	L	Working Pressure	Weight (g)
BJSI M10x1-WD	14	5	12	400 bar / 5801 PSI	8
BJSI M12x1,5-WD	17	6	17	400 bar / 5801 PSI	14
BJSI M14x1,5-WD	19	6	17	400 bar / 5801 PSI	20
BJSI M16x1,5-WD	22	8	17	400 bar / 5801 PSI	25
BJSI M18x1,5-WD	24	8	17	400 bar / 5801 PSI	32
BJSI M20x1,5-WD	26	10	19	400 bar / 5801 PSI	42
BJSI M22x1,5-WD	27	10	19	400 bar / 5801 PSI	51
BJSI M26x1,5-WD	32	12	21	400 bar / 5801 PSI	78
BJSI M27x2-WD	32	12	21	400 bar / 5801 PSI	79
BJSI M33x2-WD	40	17	23	400 bar / 5801 PSI	130
BJSI M42x2-WD	50	22	23	315 bar / 4568 PSI	198
BJSI M48x2-WD	55	24	23	315 bar / 4568 PSI	263

Type WD
ISO 1179-2 - BSP Thread
ISO 9974-2 - Metric Thread

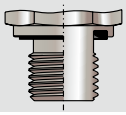

Coding Example:

BJSI 3/8 BSP (Internal Hex Threaded Plug, 3/8 BSP, WD sealing type).

For AISI 316 stainless steel, add the letter I at the end of the code.

For Viton (FKM) or EPDM seals, add the letter V or E at the end of the code.

If you require a different plug configuration not listed in this catalog, please contact our Technical Department.

Internal Hex UNF ISO 11926 Threaded Plugs

BJSI UNF - ISO 11926



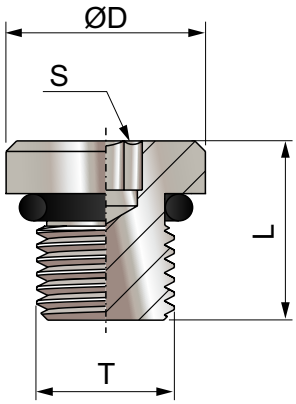

ISO 11926					
Thread Type: T	D	S	L	Working Pressure	Weight (g)
BJSI 3/8-24 UNF	13	1/8	10	420 bar / 6090 PSI	5
BJSI 7/16-20 UNF	14	3/16	12	420 bar / 6090 PSI	7
BJSI 1/2-20 UNF	16	3/16	12	420 bar / 6090 PSI	10
BJSI 9/16-18 UNF	18	1/4	13	420 bar / 6090 PSI	12
BJSI 3/4-16 UNF	22	5/16	15	420 bar / 6090 PSI	26
BJSI 7/8-14 UNF	25	3/8	16	420 bar / 6090 PSI	39
BJSI 1 1/16-12 UNF	32	9/16	19	420 bar / 6090 PSI	64
BJSI 1 3/16-12 UNF	35	9/16	19	380 bar / 5510 PSI	85
BJSI 1 5/16-12 UNF	38	5/8	19	380 bar / 5510 PSI	103
BJSI 1 5/8-12 UNF	48	3/4	19	280 bar / 4060 PSI	165
BJSI 1 7/8-12 UNF	54	3/4	20	210 bar / 3045 PSI	238

Internal Hex Metric Threaded Plugs ISO 6149

BJSI – Metric Thread ISO 6149



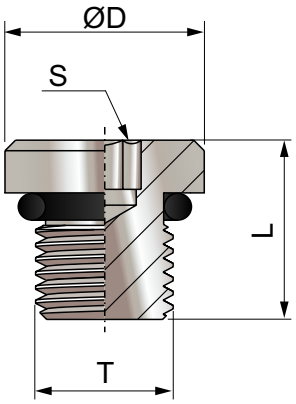

ISO 6149					
Thread Type: T	D	S	L	Working Pressure	Weight (g)
BJSI M8x1-O	12	4	13	630 bar / 9137 PSI	6
BJSI M10x1-O	13	5	13,5	630 bar / 9137 PSI	8
BJSI M12x1,5-O	17	6	15	630 bar / 9137 PSI	14
BJSI M14x1,5-O	19	6	16	630 bar / 9137 PSI	20
BJSI M16x1,5-O	21	8	17,5	630 bar / 9137 PSI	26
BJSI M18x1,5-O	23	8	19	630 bar / 9137 PSI	37
BJSI M22x1,5-O	27	10	20	630 bar / 9137 PSI	58
BJSI M26x1,5-O	31	12	21	400 bar / 5801 PSI	77
BJSI M27x2-O	32	12	23,5	400 bar / 5801 PSI	95
BJSI M33x2-O	38	14	25	400 bar / 5801 PSI	148
BJSI M42x2-O	48	22	25,5	400 bar / 5801 PSI	233
BJSI M48x2-O	55	24	28	400 bar / 5801 PSI	336

Type O
ISO 6149-2 / -3 Metric Thread
ISO 11926-2 / -3 UNF Thread

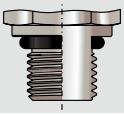

Coding Example:
BJSI 3/8 UNF (Internal Hex Threaded Plug, 3/8 UNF, O-ring sealing type).
For AISI 316 stainless steel, add the letter I at the end of the code.
For Viton (FKM) or EPDM seals, add the letter V or E at the end of the code.
If you require a different plug configuration not listed in this catalog, please contact our Technical Department.



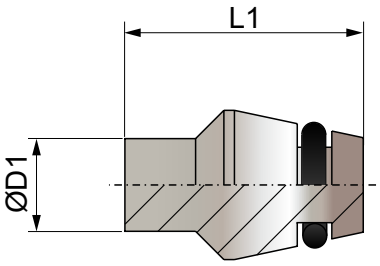

BUTZ					
Code	Series	D1	L1	Working Pressure	Weight (g)
BUTZ-06	L	06	18,5	500 bar / 7250 PSI	6
BUTZ-08	L	08	18,5	500 bar / 7250 PSI	9
BUTZ-10	L	10	20,0	500 bar / 7250 PSI	15
BUTZ-12	L	12	20,5	400 bar / 5800 PSI	21
BUTZ-15	L	15	20,5	400 bar / 5800 PSI	32
BUTZ-18	L	18	22,5	400 bar / 5800 PSI	49
BUTZ-22	L	22	25,0	250 bar / 3625 PSI	80
BUTZ-28	L	28	25,5	250 bar / 3625 PSI	131
BUTZ-35	L	35	30,0	250 bar / 3625 PSI	240
BUTZ-42	L	42	30,0	250 bar / 3625 PSI	343
BUTZ-06	S	06	18,5	800 bar / 11600 PSI	6
BUTZ-08	S	08	18,5	800 bar / 11600 PSI	9
BUTZ-10	S	10	20,0	800 bar / 11600 PSI	15
BUTZ-12	S	12	20,5	630 bar / 9135 PSI	21
BUTZ-14	S	14	22,5	630 bar / 9135 PSI	30
BUTZ-16	S	16	23,5	630 bar / 9135 PSI	40
BUTZ-20	S	20	28,5	420 bar / 6090 PSI	78
BUTZ-25	S	25	29,0	420 bar / 6090 PSI	120
BUTZ-30	S	30	30,5	420 bar / 6090 PSI	180
BUTZ-38	S	38	33,0	420 bar / 6090 PSI	309

Coding Example:

BUTZ 06 (DKO sealing plug size 6, DIN 2353, L Series).

For AISI 316 stainless steel, add the letter I at the end of the code.

For Viton (FKM) or EPDM seals, add the letter V or E at the end of the code.

If you require a different plug configuration not listed in this catalog, please contact our Technical Department.



gepef

Manifold Block Components

Control Piston

EGPFS

D
1/2’’
9/16’’
5/8’’



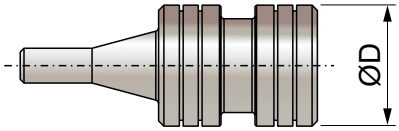

Materials	Treatment
SAE 8620	Customized according to customer requirements

Finish	Dimensions / tolerances
Ground	Customized according to customer requirements

Double Control Piston

EGPFD

D
1/2’’
9/16’’
5/8’’



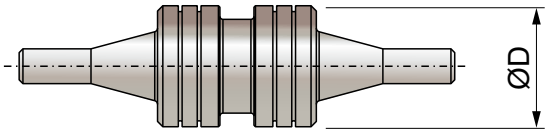

Materials	Treatment
SAE 8620	Customized according to customer requirements

Finish	Dimensions / tolerances
Ground	Customized according to customer requirements

Plain Orifice Disc

DOS

D
1/2”
9/16”
5/8”

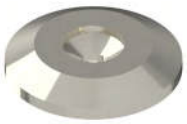

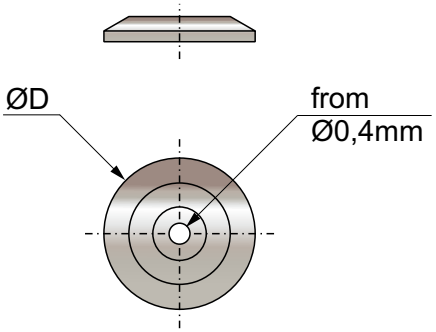

Materials
Carbon Steel

Dimensions / tolerances
Customized according to customer requirements

Hexagonal Unidirectional Orifice Disc

DOUS

D
1/2”
9/16”
5/8”

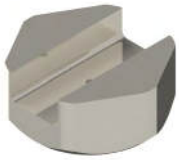

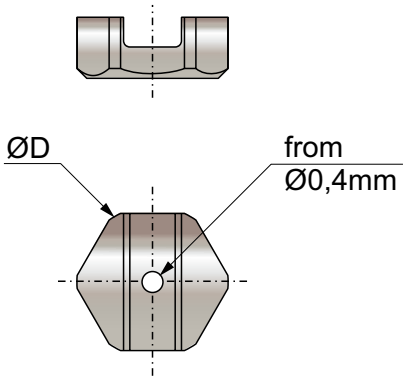

Materials
Carbon Steel

Dimensions / tolerances
Customized according to customer requirements

Square Unidirectional Orifice Disc

DOUQ

D
1/2''
9/16''
5/8''



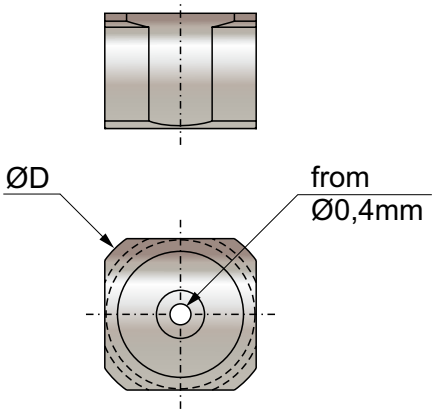

Materials
Carbon Steel

Dimensions / tolerances
Customized according to customer requirements



gepef

Special Test Connectors

QUICK CONNECTORS – INTRODUCTION

Quick Connectors

For pressure testing, functional testing, filling and plugging.
WEH is one of the leading manufacturers of quick connectors for pressure and function testing. For over 40 years, the unique jaw locking mechanism developed by WEH has represented a leap in the efficiency of leak testing.

Extensive connection possibilities

Female or male threads, straight tubes, beads, collars, swages/flares or bores: WEH offers a solution for almost every application where a connection is needed. A suitable testing connector is available for each type of connection. We offer customer-tailored solutions for special applications even from small quantities.



In addition to the benefits the WEH® Jaw locking mechanism offers, you will no longer need pre-mounted coupling systems when using a WEH® Connector. It is not necessary to attach a counterpart to the component to be tested - with the WEH® Connectors you simply connect to the existing ports.

Connections in seconds

Pressure testing of components for leak tightness and function, whether manual, pneumatic or fully automatic, must be simple and time-saving. WEH® Connectors are simply placed onto / over or into the inlet of the test piece and the pressure tight connection is immediate. Laborious thread connections and tightening of pressure test hoses is no longer needed and intricate testing devices are a thing of the past. The WEH® Connectors are designed for pressures up to several 1000 bar depending on connection type and test piece. In comparison to threaded connections there are significant time and cost reductions due to the efficient design of WEH® Connectors.

As a long standing partner to the international automotive, hydraulic and other manufacturing industries, WEH offers advanced solutions to make production processes faster, cost effective and more efficient.

The original WEH® Jaw locking mechanism

A major part of the WEH® Connectors has the unique jaw locking mechanism developed by WEH. Hard wearing jaws clamp securely and safely onto a large variety of different connections, including female and male threads, straight tubes, tube ends and bores among others.
Laborious screwing and unscrewing of hoses is eliminated and the operators‘ joints are spared. The latest sealing technology provides a pressure-tight connection for your application.



QUICK CONNECTORS – INTRODUCTION

Applications

WEH® Quick connectors have become standard in the general industry worldwide. Where all supply lines had to be screwed
on engine test benches, now the innovative WEH® Connectors enable pressure-tight connections in seconds.
Increase your productivity using WEH® Connectors and benefit from the significant advantages:

- Safe and pressure-tight connections
- Reduction of connecting times cost saving
- Ease of operation
- Operators‘ joints are protected from RSI

Connection solutions for hydraulic, pneumatic and fluid applications include testing of pressure vessels, fluid lines, hydraulic aggregates / hydraulic pumps / hydraulic blocks, pneumatic components, air engines, engines, injector pumps, steering racks, cylinder and automotive components.

Examples of use



TW723 | Testing of engines



TW800 | Testing of engines



TW17H | Testing of injection pumps



TW17V | 3 x twin connector for testing of hydraulic pumps

QUICK CONNECTORS – PRODUCTS

Connectors for female threads



TW17



TW19



TW05

Connectors for male threads



TW18

Universal connectors for threads, tubes, beads, etc.



TW800



TW850



TW141



TW221



TW0230



TW01



TW02

QUICK CONNECTORS – POSSIBILITIES

Type	Max. allowable operating pressure bar / psi	Male threads	Female threads	Straight tubes	Holes and bores	Swaged and flared	Beads	Collars	Barbs
				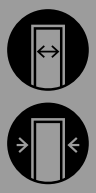					
TW17	350 / 5.000		✓						
TW19	350 / 5.000		✓						
TW05	12 / 175		✓						
TW18	350 / 5.000	✓				✓	✓	✓	✓
TW800	50 / 725	✓				✓	✓	✓	✓
TW850	630 / 9.140	✓				✓	✓	✓	✓
TW141	100 / 1.450			✓					
TW221	3 / 45			✓	✓	✓		✓	✓
TW230	70 / 1.015			✓	✓			✓	✓
TW01	9 / 130		✓	✓	✓	✓	✓	✓	✓
TW02	35 / 510	✓		✓		✓	✓	✓	✓

Possible Actuations: Manual, pneumatic or automated.

TW17 - Characteristics



Features

- Connection in seconds
- No hand tightening required
- WEH® Jaw locking mechanism
- Modified clamping jaws for increased flow
- Ergonomic design
- High-grade materials
- Different actuations
- Automation possible
- Testing devices are eliminated

The WEH® TW17 Quick connector is designed for sealing standardized female thread applications. The higher the test pressure the tighter the WEH® Connector will clamp itself into the thread of the test piece and provides a pressure-tight connection in seconds. The front o-ring reliably seals the connection and no additional clamping devices are required. Time-consuming and expensive testing devices are eliminated.
Bores have been added as standard to the clamping jaws for body sizes 5 - 6 of the WEH® TW17 Connector to increase flow rates.



TW17 with bores
for increased flow

The WEH® TW17 Connector is available with different actuations:
TW17H - Manual actuation via lever
TW17V - Pneumatic actuation via valve head
TW17P - Pneumatic actuation for external manual, semi or fully automatic control systems
The actuation can be easily changed at any time by simply unscrewing the rear part of the connector and replacing it with the chosen actuation.
Special versions, e.g. connectors in longer or shorter versions, as a plug or with hydraulic actuation etc. are possible (see special solutions).

Application
Quick connector for pneumatic and hydraulic pressure and function testing of components with female thread, e.g. engines, cylinders, pressure vessels, hoses, fixtures, etc.

TW17 - Characteristics

Pilot pressure

6 - 12 bar (90 - 175 psi) compressed air

Material

Corrosion resistant stainless steel, anodized aluminium

Max. allowable operating pressure PS

Vacuum up to 350 bar (5,000 psi)

Sealing material

Front seal of NBR

Leak rate

$1x10^{-3}$ mbar x l/s

Temperature range

+5 °C up to +80 °C (+41 °F up to +176 °F)

Actuation

H = manual actuation via lever

V = pneumatic actuation via valve head

P = pneumatic actuation for external manual, semi or fully automatic control systems

Example of use



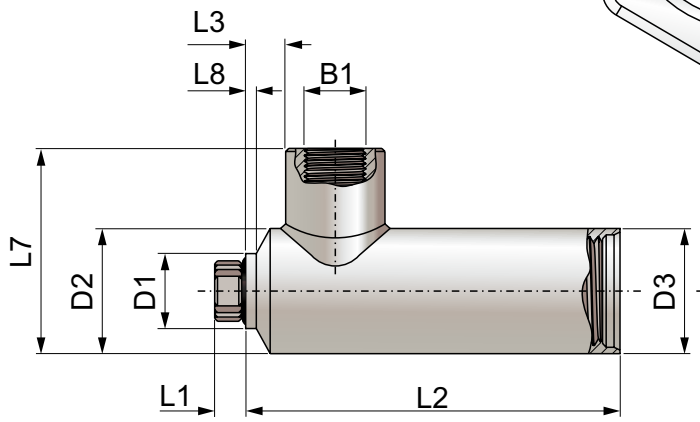

Body size 1 - 4

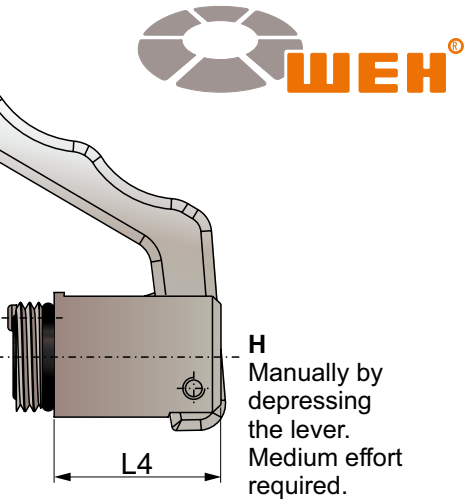

H
Manually by depressing the lever. Medium effort required.

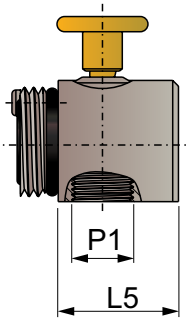

V
Pneumatically by pressing the valve head. Very little effort required.

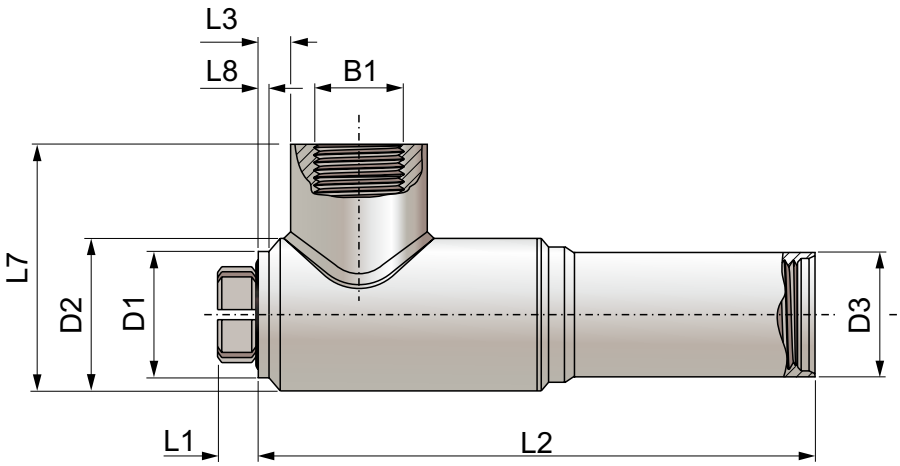

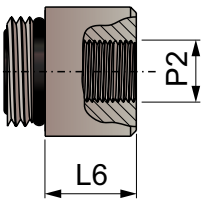

P
Pneumatically for external manual, semi or fully automatic control systems.

Body size 5 - 6

Body size	B1** (female thread)	D1	D1*	D2	D2*	D3	L1	L2	L3	L4	L5	L6	L7	L8	L8*
1	1/8 BSP	15	15	25	25	25	8	75	8	33,5	24	18	44	2,5	2,5
2	1/4 BSP	19	20,5	27	27	27	9	75	9	32	18	18	40	2,5	5
3	3/8 BSP	23	26	32	32	32	12	88	9,5	35	18	18	50	2	4
4	1/2 BSP	27	29	37	37	37	12	88	8,0	35	18	18	55	3	4
5	3/4 BSP	33	40,5	40	45	32	14	145	8,0	35	18	18	68,5	3	8
6	1 BSP	40	46,5	49	49	32	14	168	18	35	18	18	77	3	5

* applies to SAE J1926
** metric threads (G) available on request

Metric Female

Metric Female DIN 3852

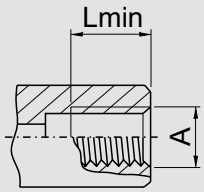

Dimensions			
Code	Body size	Thread A (female thread)	L min.*
TW17...-W9031-021	1	M10x1,0	7
TW17...-W9033-041	2	M12x1,0	9,5
TW17...-W9034-041	2	M12x1,5	9,5
TW17...-W9035-041	2	M14x1,5	9,5
TW17...-W9036-061	3	M16x1,5	10,5
TW17...-W9037-061	3	M18x1,5	10,5
TW17...-W9038-081	4	M20x1,5	10,5
TW17...-W9039-081	4	M22x1,5	10,5
TW17...-W9040-121	5	M24x1,5	11
TW17...-W9043-121	5	M26x1,5	11

* Lmin: minimum thread length
Other connection sizes on request

Metric Female

Metric Female ISO 6149-1

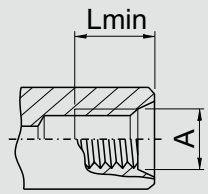

Dimensions			
Code	Body size	Thread A (female thread)	L min.*
TW17...-W9082-021	1	M10x1,0	7
TW17...-W9083-041	2	M12x1,5	9,5
TW17...-W9084-041	2	M14x1,5	9,5
TW17...-W9085-061	3	M16x1,5	10,5
TW17...-W9086-061	3	M18x1,5	10,5
TW17...-W9133-081	4	M20x1,5	10,5
TW17...-W9087-081	4	M22x1,5	10,5
TW17...-W9092-121	5	M27x2,0	11

* Lmin: minimum thread length
Other connection sizes on request

UNF Thread

Female Thread SAE J1926 / ISO 11926

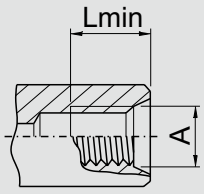

Dimensions			
Code	Body size	Thread A (female thread)	L min.*
TW17...-W9047-041	1	-4 (7/16-20)	7
TW17...-W9048-041	2	-5 (1/2-20)	9,5
TW17...-W9049-041	2	-6 (9/16-18)	9,5
TW17...-W9052-061	3	-8 (3/4-16)	10,5
TW17...-W9053-081	4	-10 (7/8-14)	10,5
TW17...-W9055-121	5	-12 (1 1/16-12)	11
TW17...-W9056-161	6	-16 (1 5/16-12)	11

* Lmin: minimum thread length
Other connection sizes on request

Whitworth Thread

Female Thread DIN 3852 / ISO 228-1

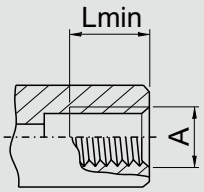

Dimensions			
Code	Body size	Thread A (female thread)	L min.*
TW17...-W9000-021	1	G1/8	7
TW17...-W9001-041	2	G1/4	9,5
TW17...-W9002-061	3	G3/8	10,5
TW17...-W9003-081	4	G1/2	10,5
TW17...-W9005-121	5	G3/4	11
TW17...-W9006-161	6	G1	12,5

* Lmin: minimum thread length
Other connection sizes on request

BSPT Thread

Female Thread DIN 3852

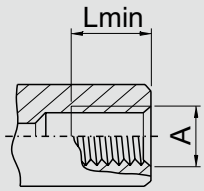

Dimensions			
Code	Body size	Thread A (female thread)	L min.*
TW17...-W9024-021	1	1/8 BSTP	7
TW17...-W9025-041	2	1/4 BSTP	9,5
TW17...-W9026-061	3	3/8 BSTP	10,5
TW17...-W9027-081	4	1/2 BSTP	10,5
TW17...-W9029-121	5	3/4 BSTP	11
TW17...-W9030-161	6	1 BSTP	12,5

* Lmin: minimum thread length
Other connection sizes on request

NPT Thread

Female Thread ANSI / ASME B1.20.1

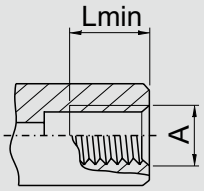

Dimensions			
Code	Body size	Thread A (female thread)	L min.*
TW17...-W9007-021	1	1/8 NPT	7
TW17...-W9008-041	2	1/4 NPT	9,5
TW17...-W9009-061	3	3/8 NPT	10,5
TW17...-W9010-081	4	1/2 NPT	10,5
TW17...-W9012-121	5	3/4 NPT	11
TW17...-W9013-161	6	1 NPT	12,5

* Lmin: minimum thread length
Other connection sizes on request

Special Solutions

Examples:



TW17P with extension



TW17V twin connector

Coding Example:	
TW17H-W9031-021 / HP (Connector)	
• Actuation type is specified after the connector code (H, V or P).	
• Add LP at the end of the code for low-pressure version (up to 50 bar / 725 psi) or HP for high-pressure version (up to 350 bar / 5,000 psi).	
Standard Thread Profiles Available	
021	1/8” NPT 025 = G1/8”
041	1/4” NPT 045 = G1/4”
061	1/4” NPT 045 = G1/4”
081	1/2” NPT 085 = G1/2”*
121	3/4” NPT 125 = G3/4”
161	1” NPT 165 = G1”
* G 1/2” is compatible with 1/2” NPT.	
If another type of quick connector not listed in this catalog is required, please contact our technical department.	

TW19 - Characteristics





Features

- Connection in seconds
- No hand tightening required
- WEH® Jaw locking mechanism
- High-grade materials

The WEH® TW19 Quick connector is especially designed for sealing hydraulic components with female thread in high and low pressure applications.
The clamping lever actuated connector safely grips into the test piece, even in case of high lateral forces, e.g. heavy or rigid hoses. The higher the test pressure the tighter the WEH® Connector will clamp itself into the thread of the test piece.
The front o-ring reliably seals the connection and no additional clamping devices are required.
Having only one seal in the interior of the connector, ease of maintenance is provided.

Application

Quick connector for pneumatic and oil-hydraulic pressure and function testing of components with female thread, e.g. hydraulic aggregates.

Max. allowable operating pressure PS
Vacuum up to 350 bar (5,000 psi)

Actuation
Manual actuation via clamping lever

Temperature range
+5 °C up to +80 °C (+41 °F up to +176 °F)

Material
Corrosion resistant stainless steel

Leak rate
$1x10^{-3}$ mbar x l/s

Sealing material
Front seal of NBR

Other designs on request
Note: Please contact us when using corrosive media or water!

Example of use:



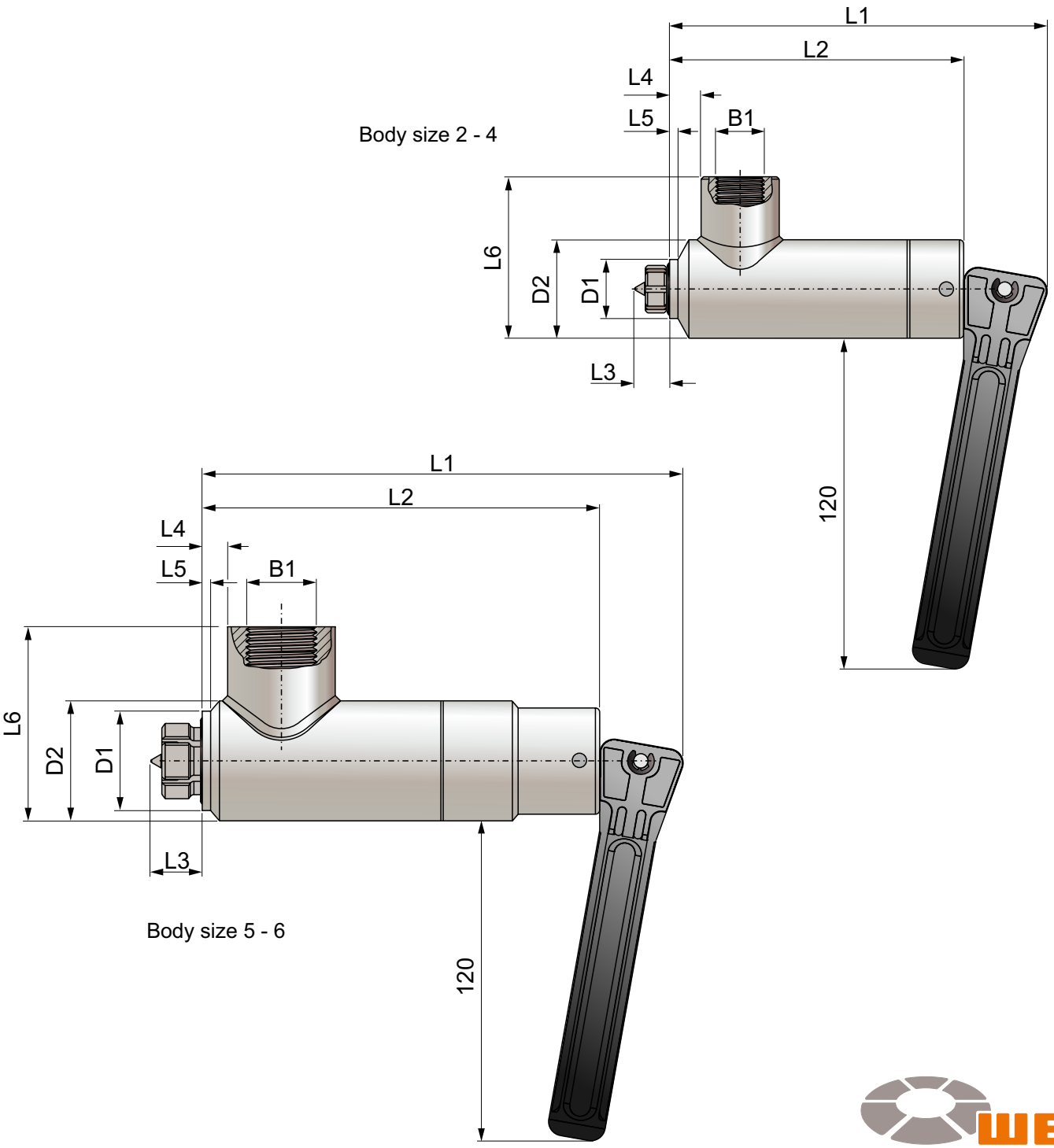

Body size	B1** (female thread)	D1	D1*	D2	D2*	L1	L2	L3	L4	L5	L5*	L6
2	1/4 BSP	19	20,5	27	27	118	88,5	13	9	2,5	5	40
3	3/8 BSP	23	26	32	32	131	101,5	16	9,5	2	4	50
4	1/2 BSP	27	29	37	37	131	101,5	17	8	3	4	55
5	3/4 BSP	33	40,5	40	45	146	117	19,5	8	3	8	69
6	1 BSP	40	46,5	49	49	170	140	17	18	3	8	74

* applies to SAE J1926
** metric threads (G) available on request

Metric Female

Metric Female DIN 3852

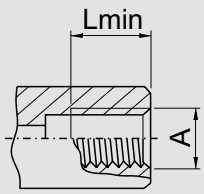

Dimensions			
Code	Body size	Thread A (female thread)	L min.*
C1-124801	2	M12x1,5	9,5
C1-124802	2	M14x1,5	9,5
C1-16862	3	M16x1,5	10,5
C1-32257	3	M18x1,5	10,5
C1-48676	4	M20x1,5	10,5
C1-124803	4	M22x1,5	10,5
a pedido	5	M24x1,5	11
C1-60458	5	M26x1,5	11

* Lmin: minimum thread length
Other connection sizes on request

Metric Female

Metric Female ISO 6149-1

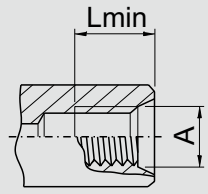

Dimensions			
Code	Body size	Thread A (female thread)	L min.*
C1-16287	2	M12x1,5	9,5
C1-16288	2	M14x1,5	9,5
C1-16289	3	M16x1,5	10,5
C1-16290	3	M18x1,5	10,5
a pedido	4	M20x1,5	10,5
C1-16291	4	M22x1,5	10,5
C1-36110	5	M27x2,0	11

* Lmin: minimum thread length
Other connection sizes on request

UNF Thread

Female Thread SAE J1926 / ISO 11926

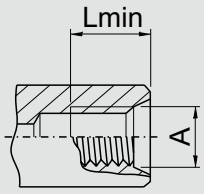

Dimensions			
Code	Body size	Thread A (female thread)	L min.*
C1-16267	2	-5 (1/2-20)	9,5
C1-16268	2	-6 (9/16-18)	9,5
C1-16269	3	-8 (3/4-16)	10,5
C1-16270	4	-10 (7/8-14)	10,5
C1-15839	5	-12 (1 1/16-12)	11
C1-16272	6	-16 (1 5/16-12)	11

* Lmin: minimum thread length
Other connection sizes on request

Whitworth Thread

Female Thread DIN 3852

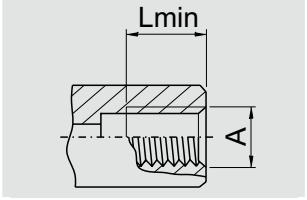

Dimensions			
Code	Body size	Thread A (female thread)	L min.*
C1-16277	2	G1/4	9,5
C1-16278	3	G3/8	10,5
C1-16279	4	G1/2	10,5
C1-16174	5	G3/4	11
C1-16281	6	G1	12,5

* Lmin: minimum thread length
Other connection sizes on request

BSPT Thread

Female Thread DIN 3852

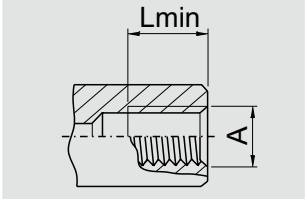

Dimensions			
Code	Body size	Thread A (female thread)	L min.*
C1-16282	2	1/4 BSTP	9,5
C1-16283	3	3/8 BSTP	10,5
C1-16-284	4	1/2 BSTP	10,5
C1-16179	5	3/4 BSTP	11
C1-16286	6	1 BSTP	12,5

* Lmin: minimum thread length
Other connection sizes on request

NPT Thread

Female Thread ANSI / ASME B1.20.1

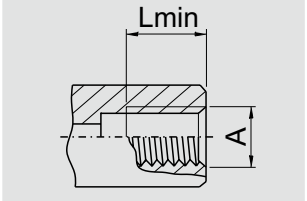

Dimensions			
Code	Body size	Thread A (female thread)	L min.*
C1-16262	2	1/4 NPT	9,5
C1-16263	3	3/8 NPT	10,5
C1-16264	4	1/2 NPT	10,5
C1-72167	5	3/4 NPT	11
C1-16266	6	1 NPT	12,5

* Lmin: minimum thread length
Other connection sizes on request

TW05 - Characteristics





Features

- Connection in seconds
- No hand tightening required
- WEH® Jaw locking mechanism
- Simple seal replacement
- Ergonomic design
- Compact design
- High-grade materials
- Automation possible

With the WEH® TW05 Quick connector pneumatic components are tested faster than ever before. Connecting and pressure impacting of the test piece is accomplished in one operation by simple actuation of the sliding sleeve. In this way, costly testing times are shortened and the quick connector pays for itself in a very short time.

Application

Quick connector for pneumatic pressure and function testing of components with female thread, e.g. cylinders, valves, fixtures, pivot drives etc.

Note

For using the WEH® Connectors with pneumatic actuation and clamping jaws in an automated system please observe the technical.

Max. allowable operating pressure PS
12 bar / 175 PSI

Sealing material
Front seal of NBR

Temperature range
+5 °C up to +80 °C (+41 °F up to +176 °F)

Leak rate
$1x10^{-3}$ mbar x l/s

Material
Clamping jaws: corrosion-resistant stainless steel
Outer parts: anodized aluminium

Other designs on request

Example of use



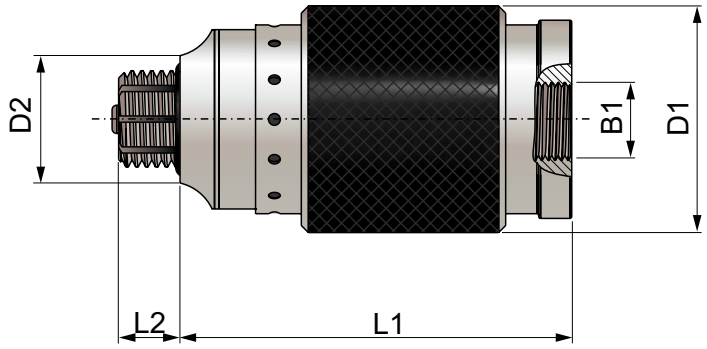

Body size	B1** (female thread)	D1	D2	D3	L1	L2
1	1/4 BSP	38	15	-	78,5	6
2	1/4 BSP	38	19	-	78,5	6
3	1/2 BSP	48	23,5	-	82,5	6,5
4	1/2 BSP	48	27	-	82,5	6

*metric threads (G) available on request

Whitworth Thread

Female Thread DIN 3852

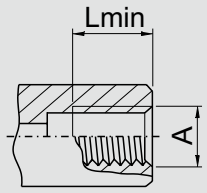

Dimensions

Code	Body size	Thread A (female thread)	L min.*
TW05-W8000-041	1	G1/8	7
TW05-W8001-041	2	G1/4	9,5
TW05-W8002-081	3	G3/8	10,5
TW05-W8003-081	4	G1/2	10,5

* Lmin: minimum thread length
Other connection sizes on request

NPT Thread

Female Thread ANSI / ASME B1.20.1

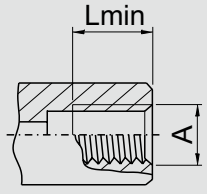

Dimensions

Code	Body size	Thread A (female thread)	L min.*
TW05-W8006-041	1	1/8NPT	7
TW05-W8007-041	2	1/4NPT	9,5
TW05-W8008-081	3	3/8NPT	10,5
TW05-W8009-081	4	1/2NPT	10,5

* Lmin: minimum thread length
Other connection sizes on request

Coding Example:

TW05-W8006-041 (Connector)

Thread type (B1) is defined by the part number

Standard thread profiles available

041	1/4" NPT 045 = G1/4"
081	1/2" NPT 085 = G1/2"*

*G 1/2" is compatible with 1/2" NPT.

If another type of quick connector not listed in this catalog is required, please contact our technical department.

TW18 - Characteristics



Features

- Connection in seconds
- No hand tightening required
- WEH® Jaw locking mechanism
- Ergonomic design
- High-grade materials
- Different actuations
- Automation possible
- Testing devices are eliminated

The WEH® TW18 Quick connector establishes pressure-tight connections to components with male thread within seconds. Only place the connector onto the thread of the test piece, the clamping jaws grip on the thread and a pressure tight connection is made.

Application

Quick connector for pneumatic and hydraulic pressure and function testing of components with male thread, e.g. engines, cylinders, pressure vessels, hoses, fixtures, etc.

Note

For using the WEH® Connectors with pneumatic actuation and clamping jaws in an automated system please observe the technical .

Pilot pressure
6 - 12 bar (90 - 175 psi) compressed air

Material
Corrosion resistant stainless steel, anodized aluminium

Max. allowable operating pressure PS
Vacuum up to 350 bar (5,000 psi)

Sealing material
Front seal of NBR

Leak rate
$1x10^{-3}$ mbar x l/s

Temperature range
+5 °C up to +80 °C (+41 °F up to +176 °F)

Actuation
H = manual actuation via lever
V = pneumatic actuation via valve head
P = pneumatic actuation for external manual, semi or fully automatic control systems

Other designs on request

Example of use



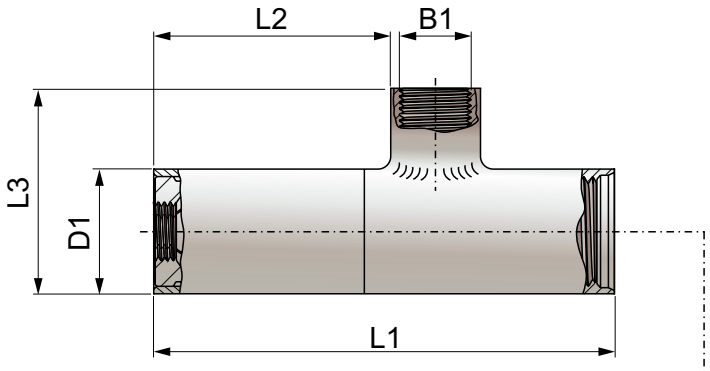

Body size 1 - 2

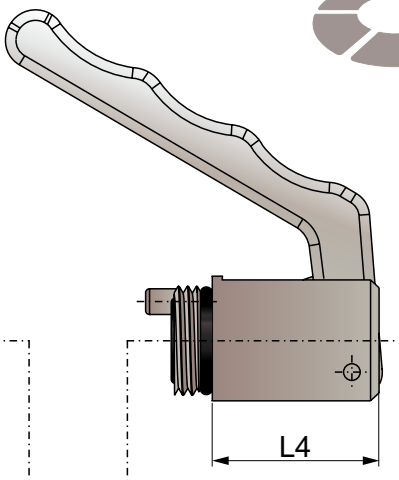

H
Manually by depressing the lever. Medium effort required.

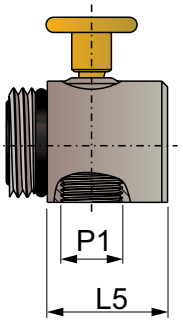

V
Pneumatically by pressing the valve head. Very little effort required.

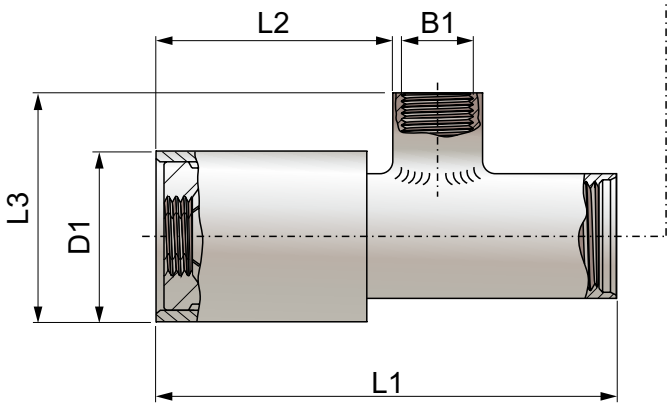

Body size 3

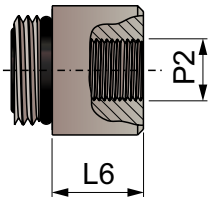

P
Pneumatically for external manual, semi or fully automatic control systems

Body size	B1* (female thread)	D1	D2	L1	L2	L3	L4	L5	L6
1	G1/2*	32	-	134	65	57,5	25	18	18
2	G1/2*	39	-	142	71	64,5	32	18	18
3	G1/2*	52	39	142	70,5	64,5	32	18	18

* G1/2“ is compatible to 1/2“ NPT

Metric Thread

Male thread ISO 8434-1

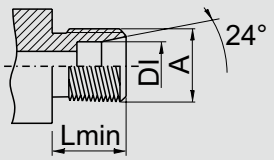

Dimensions

Code	Body size	Thread A (male thread)	Max. operating pressure PS**	DI max.	Serie	L min.*
TW18...-W8134-081	1	M10x1,0	100 bar / 1450 PSI	6	LL	8
TW18...-W8135-081	1	M12x1,0	100 bar / 1450 PSI	8	LL	9
TW18...-W8136-081	1	M12x1,5	250 bar / 3600 PSI	6	L	10
TW18...-W8137-081	1	M14x1,5	250 bar / 3600 PSI	8	L	10
TW18...-W8138-081	1	M16x1,5	250 bar / 3600 PSI	10	L	11
TW18...-W8139-081	2	M18x1,5	250 bar / 3600 PSI	12	L	11
TW18...-W8140-081	2	M22x1,5	250 bar / 3600 PSI	15	L	12

* Lmin: minimum thread length
** acc. to ISO 8434-1
Other connection sizes on request

Whitworth Thread

Male thread DIN EN ISO 228-1

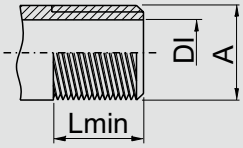

Dimensions

Code	Body size	Thread A (male thread)	DI max.	L min.*
TW18...-W8130-081	2	G1/2	14,5	12
TW18...-W8131-081	3	G3/4	18	12

* Lmin: minimum thread length
Other connection sizes on request

NPT Thread

Male thread SAE J476a

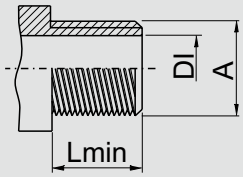

Dimensions

Code	Body size	Thread A (male thread)	DI max.	L min.*
TW18...-W8208-081	1	1/8 NPT	5	10
TW18...-W8207-081	1	1/4 NPT	7	14
TW18...-W8209-081	1	3/8 NPT	10,5	14
TW18...-W8210-081	2	1/2 NPT	14	19

* Lmin: minimum thread length
Other connection sizes on request

Jic 45°

Male thread SAE J513

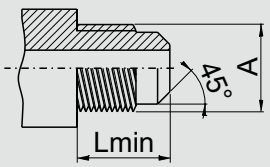

Dimensions

Code	Body size	Thread A (male thread)	L min.*
On request	On request	On request	On request

* Lmin: minimum thread length

Jic 37°

Male thread SAE J514

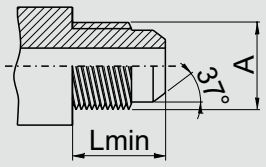

Dimensions

Code	Body size	Thread A (male thread)	L min.*
TW18...-W8119-081	1	-4 (7/16-20)	14
TW18...-W8120-081	1	-5 (1/2-20)	14
TW18...-W8121-081	1	-6 (9/16-18)	14,5
TW18...-W8122-081	2	-8 (3/4-16)	17
TW18...-W8123-081	2	-10 (7/8-14)	19,5

* Lmin: minimum thread length
Other connection sizes on request

Special Solutions

Example



TW18Z with pneumatic actuation,
central flow and
lateral pressure support

Coding Example:
TW18-W8134-081/HP (Connector)
Actuation type is specified after the connector code (H, V or P).
Add LP at the end of the code for low-pressure version (up to 50 bar / 725 psi) or HP for high-pressure version (up to 350 bar / 5,000 psi).
If another type of quick connector not listed in this catalog is required, please contact our technical department.

TW800 - Characteristics



Features

- Connection in seconds
- No hand tightening required
- WEH® Jaw locking mechanism
- High-grade materials
- Special versions possible

The WEH® TW800 Quick connector simplifies work procedures, shortens test times and improves productivity. Therefore the
connector is ideal for pressure and function testing of components with a bead, rim, collar, flange, stub or male thread.
In the automotive industry WEH® TW800 is also used for testing of fuel connections, connections for cold and hot water and other supply lines as well as air conditioning components.
By using high quality stainless steel the connectors meet the stringent requirements of industrial testing. The TW800 quick connector is designed for a pressure range up to max. 50 bar (725 psi).

Application

Quick connector for pressure and function testing of components with bead, rim, collar, flange, stub or male thread, e.g. pressure vessels, compressors, heat exchangers, measuring devices, hoses, tubes, tanks, etc.

Note

For using the WEH® Connectors with pneumatic actuation and clamping jaws in an automated system please observe the technical

Material
Corrosion resistant stainless steel

Sealing material
Front seal of NBR

Max. allowable operating pressure PS*
Vacuum up to 50 bar (725 psi)

Temperature range
+5 °C up to +80 °C (+41 °F up to +176 °F)

Leak rate
$1x10^{-3}$ mbar x l/s

Example of use



* Depending on application
Other designs on request

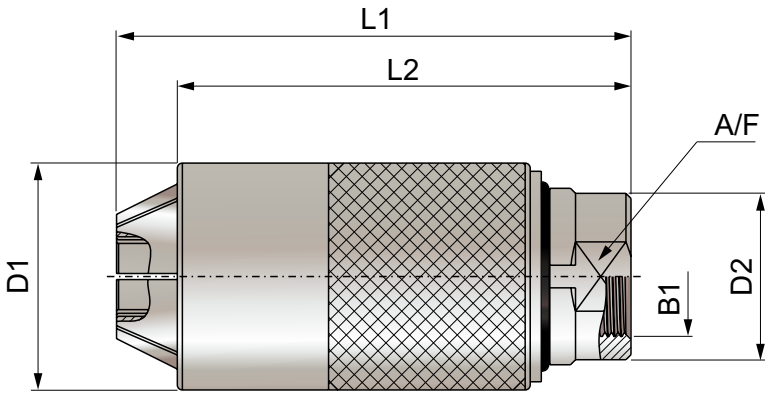

Body size	B1* (female thread)	D1	D2	D3	L1
1	1/8 BSP	22	14	74	13
2	1/8 BSP	25	17	75	15
3	1/4 BSP	30	22	74	19
4	3/8 BSP	35	27	79	24
5	1/2 BSP	40	30	79	27
6	3/4 BSP	45	33	90	30

* metric threads (G) available on request
Other body sizes on request

Tube

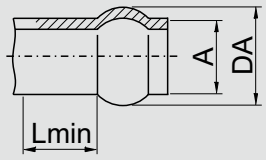

Dimensions					
Code	Body size	External tube ØA	Max. operating pressure (PS)	DA +0,5 / -0	L min.*
On request	On request	On request	On request	On request	On request

* Lmin: min. required length after bead for clamping

BSP Thread

Male thread DIN EN ISO 228-1

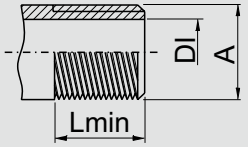

Dimensions					
Code	Body size	Thread A (male thread)	Max. operating pressure (PS)	DI max.	L min.*
TW800G...-W8375-081	5	G1/2	20 bar / 290 PSI	14,5	12
TW800G...-W8376-121	6	G3/4	20 bar / 290 PSI	20	12

* Lmin: minimum thread length
Other connection sizes on request

Jic 37°

Male thread SAE J514

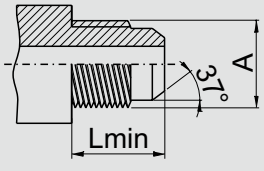

Dimensions				
Code	Body size	Thread A (male thread)	Max. operating pressure (PS)	L min.*
TW800G...-W8320-021	2	-4 (7/16-20)	50 bar / 725 PSI	14
TW800G...-W8321-041	3	-5 (1/2-20)	50 bar / 725 PSI	14
TW800G...-W8322-041	3	-6 (9/16-18)	50 bar / 725 PSI	14,5
TW800G...-W8323-081	5	-8 (3/4-16)	50 bar / 725 PSI	17
TW800G...-W8324-081	5	-10 (7/8-14)	50 bar / 725 PSI	19,5

* Lmin: minimum thread length
Other connection sizes on request

Coding Example:
TW800G-W8375-081 (Connector)
Thread type (B1) is defined by the part number
Standard thread profiles available

081= 1/2 NPT	085 = G1/2*
121 = 3/4 NPT	085 = G3/4

*G 1/2” is compatible with 1/2” NPT.

If another type of quick connector not listed in this catalog is required, please contact our technical department.

TW850 - Characteristics



Features

- Connection in seconds
- No hand tightening required
- WEH® jaw locking mechanism
- High-grade materials
- Special versions possible

The WEH® TW850 Quick connector simplifies work procedures, shortens test times and improves productivity. Therefore the connector is ideal for high pressure and function testing of components with a bead, rim, collar, flange, stub or male thread.
By using high quality stainless steel the connectors meet the stringent requirements of industrial testing. The TW850 quick connector is designed for a pressure range up to max. 630 bar (9,140 psi).

Application

Quick connector for pressure and function testing of components with bead, rim, collar, flange, stub or male thread, e.g. pressure vessels, compressors, heat exchangers, measuring devices, hoses, tubes, tanks, etc.

Note

For using the WEH® Connectors with pneumatic actuation and clamping jaws in an automated system please observe the technical.

Material	Sealing material
Corrosion resistant stainless steel	Front seal of NBR

Max. allowable operating pressure PS*	Temperature range
Vacuum up to 630 bar (9,140 psi)	+5 °C up to +80 °C (+41 °F up to +176 °F)

Leak rate
$1x10^{-3}$ mbar x l/s

* Depending on application
Other designs on request

Example of use



TW850

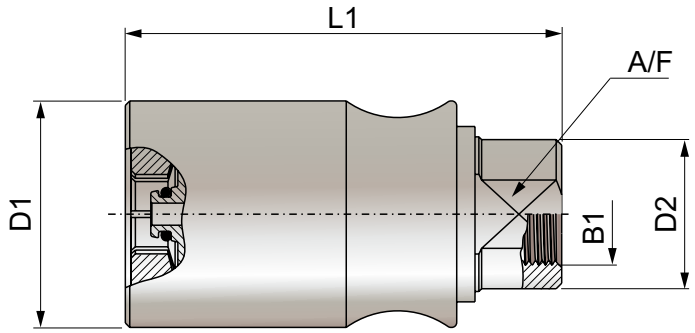

Body size	B1* (female thread)	D1	D2	L1	A/F
1	1/8 BSP	36	22	75	19
2	3/8 BSP	41	27	80	24
3	3/8 BSP	46	30	80	27
4	1/2 BSP	52	33	120	30

*metric threads (G) available on request
Other body sizes on request

Metric Threads

Male thread ISO 8434-1

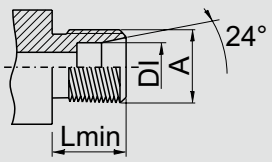

Dimensions

Code	Body size	Thread A (male thread)	Operating pressure PS**	DI max.	Serie	L min.*
On request	On request	On request	On request	On request	On request	On request

* Lmin: minimum thread length
** acc. to ISO 8434-1

TW141 - Characteristics

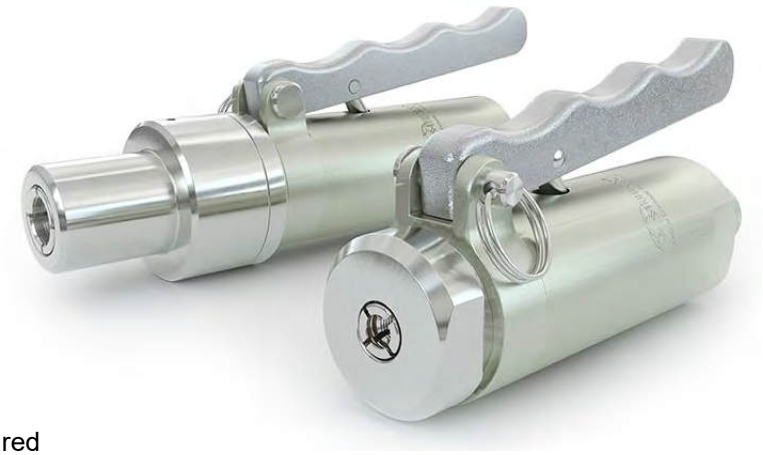

Features

- Connection in seconds
- No hand tightening required
- For connection onto straight tubes, sealing on the external diameter
- No lateral forces generated on connection
- WEH® Jaw locking mechanism
- Ergonomic design
- High-grade materials

The WEH® TW141 Quick connector provides pressure-tight connections on straight tubes of copper, steel or aluminium and has earned a reputation for ease of operation.
The TW141 is a lever-actuated connector, which creates no lateral forces that can distort the test piece or filling port when connecting and disconnecting. WEH® TW141 is fitted with an internal safety feature which prevents the connector from being removed until a pressure lower than 5 bar (75 psi) is attained.

The WEH® TW141 is equipped with a NBR front seal. Other sealing materials on request. It is the customer‘s responsibility to clarify the media compatibility.

Application

Quick connector for pressure and function testing of components with straight tube connection (sealing on external tube diameter), as for example leak testing of heat exchangers, air conditioning components and tube assemblies.
Filling of closed cooling circuits with refrigerants.

Max. allowable operating pressure PS
Vacuum up to 100 bar (1,450 psi)

Nominal bore (DN)
3 to 5 mm, acc. to design

Temperature range
-10 °C up to +80 °C (+14 °F up to +176 °F)

Leak rate
$1x10^{-3}$ mbar x l/s

Sealing material
Front seal of NBR

Material
Clamping jaws: corrosion resistant stainless steel
Housing: anodized aluminium

Max. allowable surface finish of test piece
Rz8 µm

Max. allowable material hardness of test piece
28 HRC

Other designs on request

Example of use

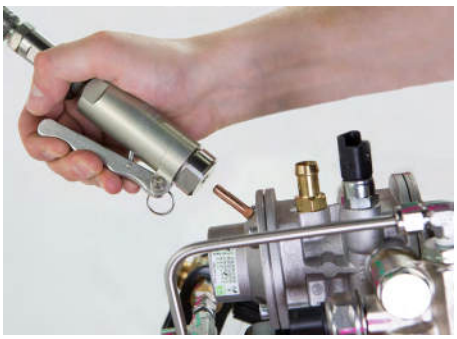

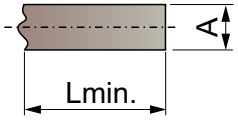

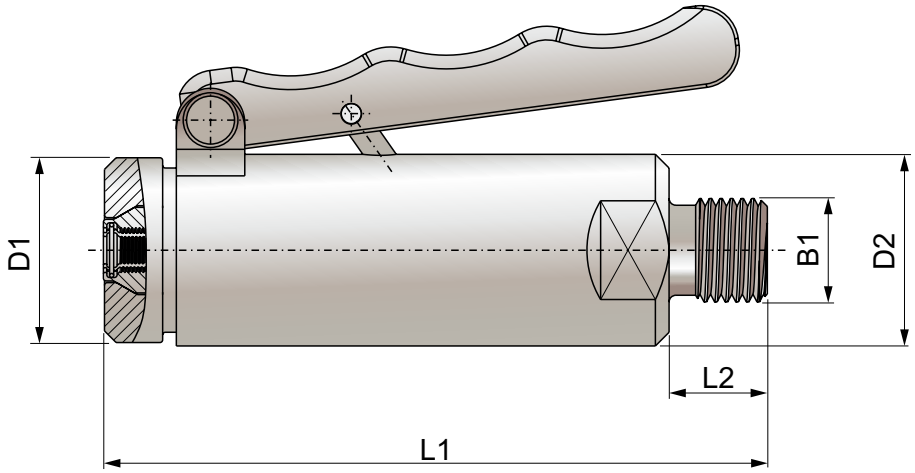

Body size 1

Code	Body size	Sealing range external tube Ø A	Tol.	B1 (male thread)	D1	D2	L1	L2	L min.*
C1-14967	1	6	±0,2	1/4 NPT	27	28	100	15	19
C1-17606	1	6,35 (1/4)	±0,2	1/4 NPT	27	28	100	15	19
C1-17750	1	7,9 (5/16)	±0,2	1/4 NPT	27	28	100	15	19
C1-14968	1	8	±0,2	1/4 NPT	27	28	100	15	19

* Lmin: minimum insertion length of test piece
Other connection sizes on request

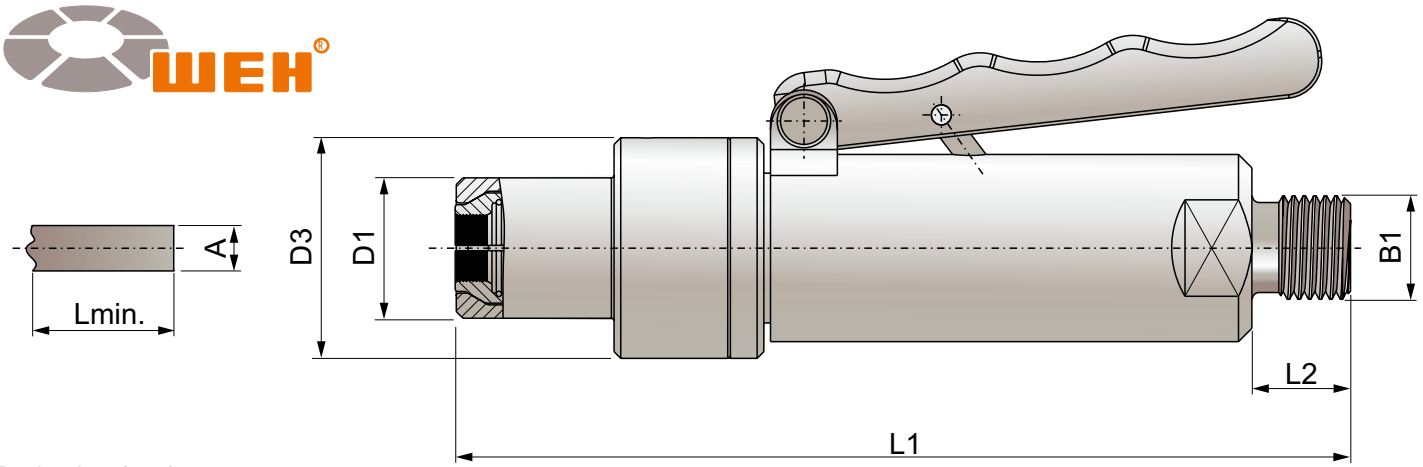

Body size 2 + 3

Code	Body size	Sealing range external tube Ø A	Tol.	B1 (male thread)	D1	D2	D3	L1	L2	L min.*
C1-17536	2	9,5 (3/8)	±0,1	1/4 NPT	21	28	33	134	15	19
C1-16773	2	10	±0,1	1/4 NPT	19	28	33	134	15	15
C1-16774	2	12	±0,1	1/4 NPT	21	28	33	134	15	15
C1-17751	2	12,7 (1/2)	±0,1	1/4 NPT	24	28	33	134	15	15
C1-16775	2	15	±0,1	1/4 NPT	24	28	33	134	15	15
C1-17959	3	15,9 (5/8)	±0,1	1/4 NPT	32	28	49	134	15	15
C1-16776	3	16	±0,1	1/4 NPT	32	28	49	134	15	15
C1-16777	3	18	±0,1	1/4 NPT	34	28	49	134	15	15
C1-18006	3	19,05 (3/4)	±0,1	1/4 NPT	34	28	49	134	15	15
C1-16778	3	22	±0,1	1/4 NPT	38	28	49	134	15	15
C1-17939		22,2 (7/8)	±0,1	1/4 NPT	38	28	49	134	15	15

* Lmin: minimum insertion length of test piece
Other connection sizes on request

TW141 - Anchor Plate

Anchor plate

WEH offers an anchor plate to create a safe, secure attachment for the TW141 and which can be used for all sealing ranges





Code	Description
E29-45285	Anchor plate for TW141

TW221 - Characteristics



Features

- Connection in seconds
- No hand tightening required
- For connection into straight tubes and bores
- No seal adjustment required
- Wide range of tube tolerances
- High-grade materials

The WEH® TW221 Quick connector provides a pressure-tight connection to bores and straight tubes of copper, steel or aluminium within seconds. The connector is suitable for pressure and vacuum testing with oil free air or gaseous media. The manually operated connector is secured to the component by its connection seal. In this case it is important that during testing, the test piece and seals have to remain absolutely dry to ensure proper functioning and sealing.
The WEH® TW221 is equipped with a SBR front seal. It is the customer‘s responsibility to clarify the media compatibility.

Application

Quick connector for pressure and vacuum testing of straight tubes and bores (sealing the internal tube diameter), as for example pressure vessels, valves, transducers, compressors, condensers, tubing systems etc.

Max. allowable operating pressure PS
3 bar / 45 PSI

Nominal bore (DN)
2 to 4 mm, acc. to design

Temperature range
+5 °C up to +80 °C (+41 °F up to +176 °F)

Leak rate
$1x10^{-3}$ mbar x l/s

Sealing material
Sealing material

Material
Anodized aluminium

Other designs on request

Example of use



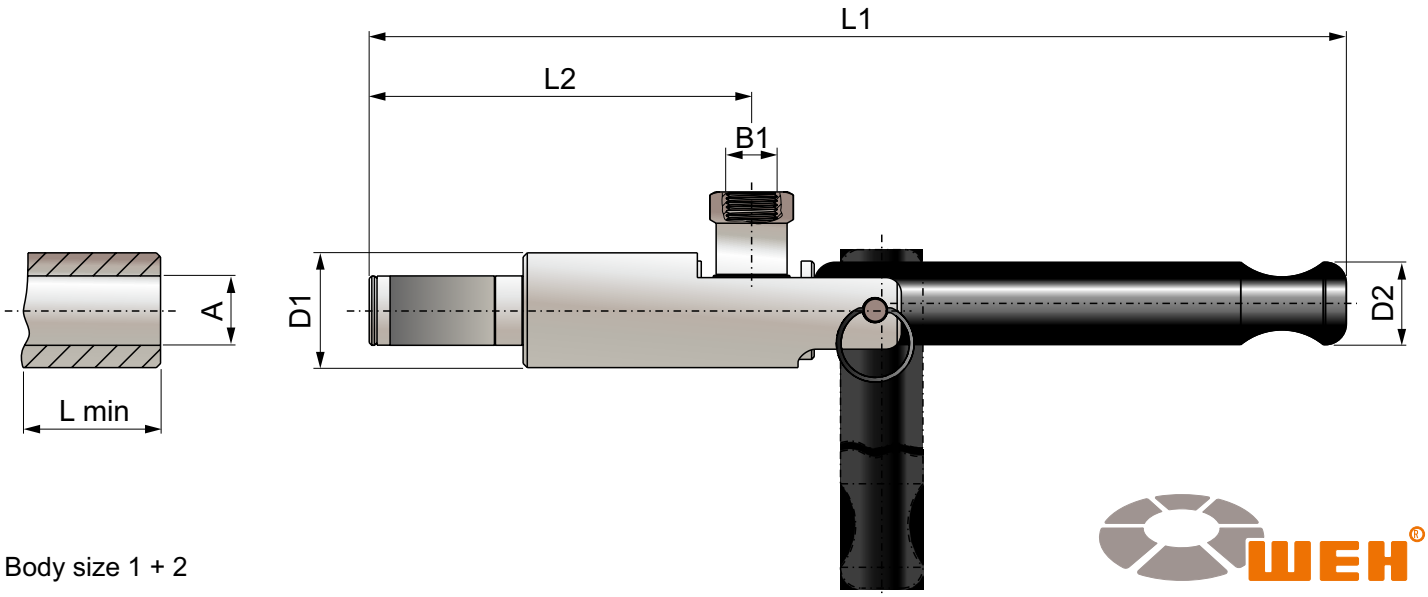

Body size 1 + 2

Code	Body size	Sealing range internal tube Ø A	B1 (female thread)	D1	D2	L1	L2	L min.*	Replacement seal set**
C1-82309	1	9,5 - 10,4	G 1/8	22	16	176	86	16	B200B-89775
C1-82814	1	10,5 - 11,4	G 1/8	22	16	176	86	16	B200B-97248
C1-82305	1	11,5 - 12,4	G 1/8	22	16	176	86	16	B200B-90418
C1-82304	1	12,5 - 13,4	G 1/8	22	16	176	86	16	B200B-89774
C1-84246	2	13,5 - 14,4	G 1/8	22	16	186	96	29	B200B-91391
C1-84247	2	14,5 - 15,4	G 1/8	22	16	186	96	29	B200B-132009
C1-84248	2	15,5 - 16,4	G 1/8	22	16	186	96	29	B200B-90420
C1-84249	2	16,5 - 17,4	G 1/8	22	16	186	96	29	B200B-98586
C1-84251	2	17,5 - 18,4	G 1/8	22	16	186	96	29	B200B-95777
C1-82300	2	18,5 - 19,4	G 1/8	22	16	186	96	29	B200B-90416
C1-84252	2	19,5 - 20,4	G 1/8	22	16	186	96	29	B200B-90442
C1-82307	2	20,5 - 21,4	G 1/8	22	16	186	96	29	B200B-135789
C1-82308	2	21,5 - 22,4	G 1/8	22	16	186	96	29	B200B-95700
C1-84253	2	22,5 - 23,4	G 1/8	22	16	186	96	29	B200B-95894
C1-83865	2	23,5 - 24,4	G 1/8	22	16	186	96	29	B200B-84806

* Lmin: minimum insertion length of test piece
** Replacement seal sets for body size 2 with a sealing range > 13.5 mm always include 10 front seals
Note: required roundness of internal tube diameter max. 0.25 mm
Other connection sizes on request

For other connection or tube sizes, please consult our technical department.

TW230 - Characteristics



Features

- Connection in seconds
- No hand tightening required
- For connection into straight tubes and bores
- WEH® Jaw locking mechanism
- No seal adjustment required
- Wide range of tube tolerances up to ± 0.25 mm
- High-grade materials

With the WEH® TW230 Quick connector straight tubes of copper, steel or aluminium can be easily tested for leak tightness in just seconds. The radial sealing system reliably seals inside tube and bore diameters from 9.5 mm to 22.2 mm and brig-
des
tube tolerances of up to ± 0.25 mm.
Connection to the straight tube is established by manual actuation of the clamping lever. Thanks to the WEH® Jaw locking mechanism the connector is securely located in the straight tube and the wear of the test piece is minimized as surface pressure is very low.
The TW230 is also suited for underwater, pressure decay and helium tests.
The WEH® TW230 is equipped with a NBR front seal. Other sealing materials on request. It is the customer‘s responsibility to clarify the media compatibility.

Application

Quick connector for pressure and vacuum testing of straight tubes and bores (sealing the internal tube diameter), as for ex ample heat exchangers, pressure vessels, valves, transducers, compressors, condensers, evaporation coils, component and tubing systems, air conditioners, heating systems etc.

Max. allowable operating pressure PS
Vacuum up to 70 bar (1,015 psi)

Nominal bore (DN)
2 to 5 mm, acc. to design

Temperature range
+5 °C up to +80 °C (+41 °F up to +176 °F)

Leak rate
$1x10^{-3}$ mbar x l/s

Sealing material
Front seal of NBR

Material
Clamping jaws: corrosion-resistant stainless steel, hardened
Housing: anodized aluminium

Max. allowable surface finish of test piece
Rz8 µm

Max. allowable material hardness of test piece
28 HRC

Other designs on request

Example of use



TW230

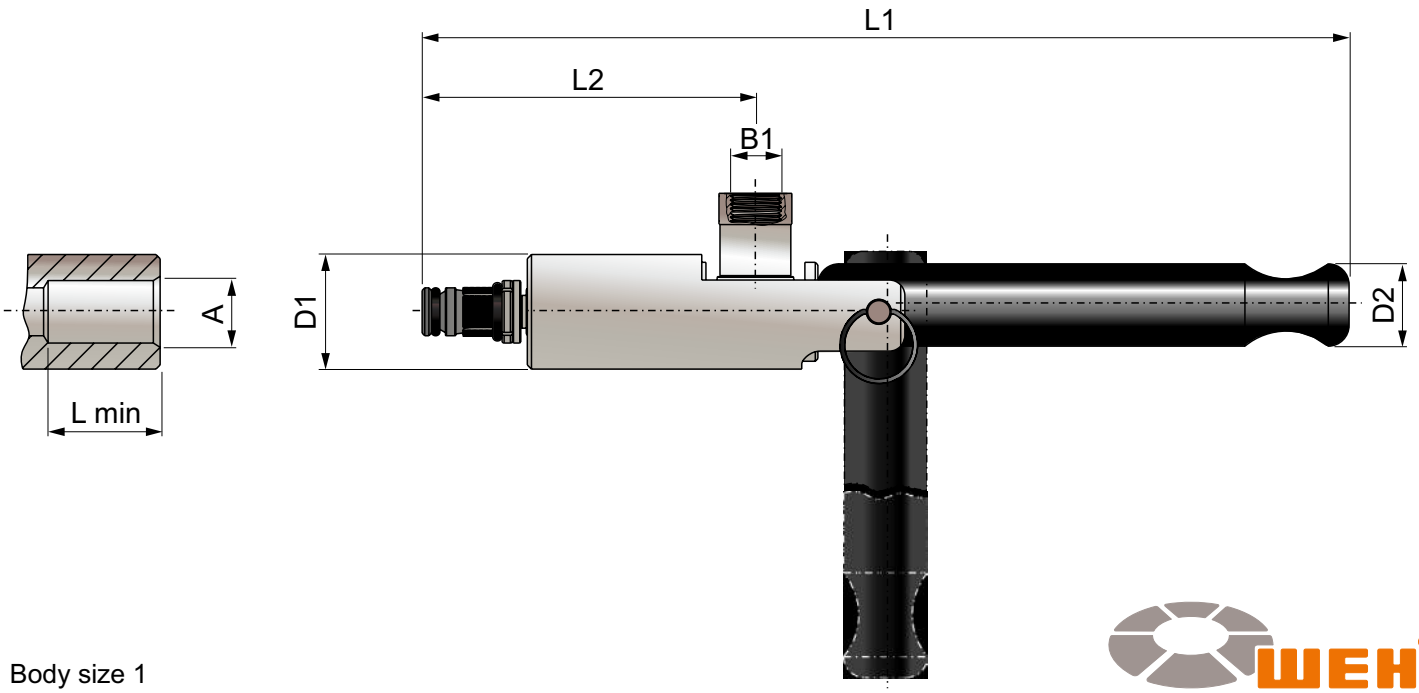

Body size 1

Code	Body size	Sealing range internal tube Ø A ± 0,25	B1 (female thread)	D1	D2	L1	L2	L min.*	Replacement seal set
C1-128668	1	9,5 (3/8)	G 1/8	22	16	178	87,5	13,5	B200B-129358
C1-128734	1	10	G 1/8	22	16	178	87,5	13,5	B200B-129364
C1-128742	1	11 (7/16)	G 1/8	22	16	178	87,5	13,5	B200B-129373
C1-128750	1	12	G 1/8	22	16	178	87,5	13,5	B200B-129381
C1-128756	1	12,7 (1/2)	G 1/8	22	16	178	87,5	13,5	B200B-129387
C1-128758	1	13	G 1/8	22	16	178	87,5	13,5	B200B-129389
C1-128767	1	14	G 1/8	22	16	178	87,5	13,5	B200B-129398

* Lmin: minimum insertion length of test piece
When ordering, please state if testing reinforced fibre glass or plastic test pieces.
Other connection sizes on request

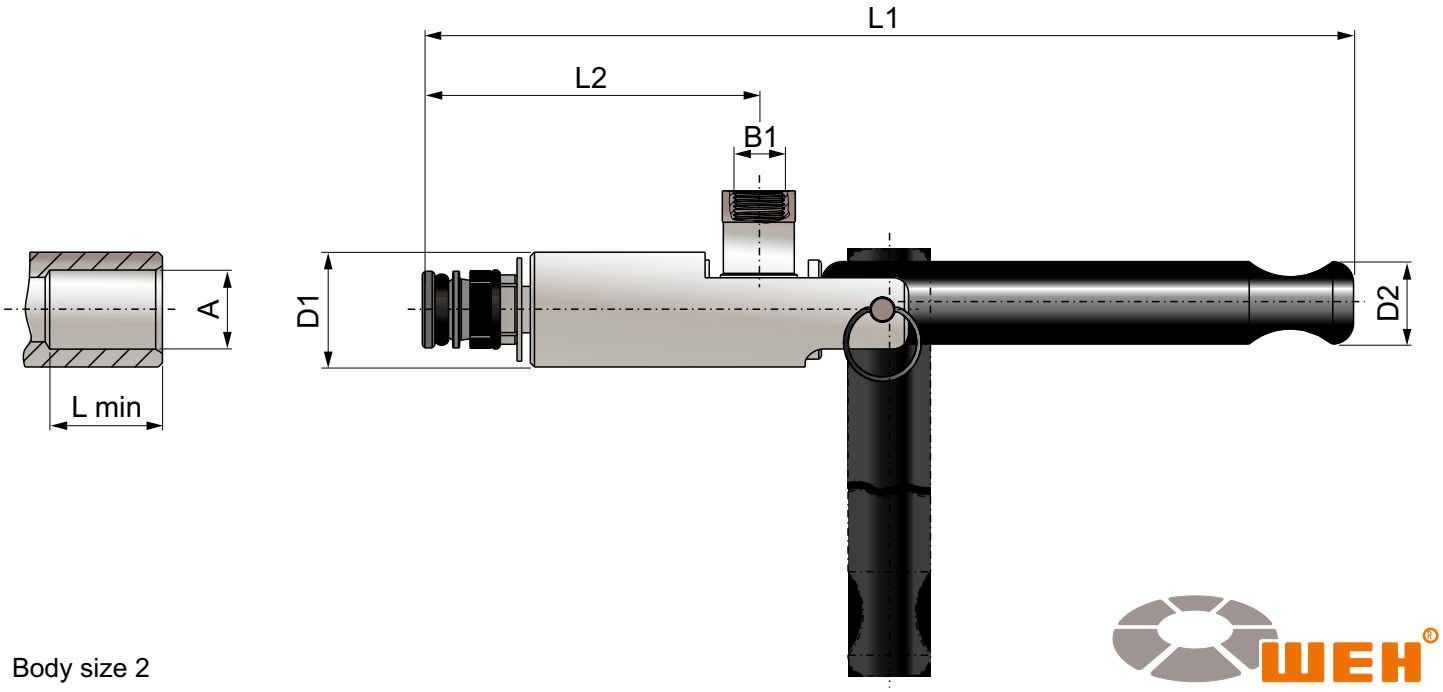

Body size 2

Code	Body size	Sealing range internal tube Ø A ± 0,25	B1 (female thread)	D1	D2	L1	L2	L min.*	Replacement seal set**
C1-128774	2	15	G 1/8	22	16	178,5	88	16	B200B-129405
C1-128778	2	15,5	G 1/8	22	16	178,5	88	16	B200B-129409
C1-128782	2	15,9 (5/8)	G 1/8	22	16	178,5	88	16	B200B-129414
C1-128783	2	16	G 1/8	22	16	178,5	88	16	B200B-129415
C1-128789	2	16,5	G 1/8	22	16	178,5	88	16	B200B-129421
C1-128792	2	17	G 1/8	22	16	178,5	88	16	B200B-129424
C1-128798	2	18	G 1/8	22	16	178,5	88	16	B200B-129436
C1-128805	2	19,05 (3/4)	G 1/8	22	16	178,5	88	16	B200B-129445
C1-128810	2	20	G 1/8	22	16	178,5	88	16	B200B-129450
C1-218820	2	22	G 1/8	22	16	178,5	88	16	B200B-129460
C1-128821	2	22,2 (7/8)	G 1/8	22	16	178,5	88	16	B200B-129461

* Lmin: minimum insertion length of test piece
** Replacement seal sets for body size 2 with a sealing range < 15.9 mm only contain 1 retaining ring for the clamping jaws
When ordering, please state if testing reinforced fibre glass or plastic test pieces.
Other connection sizes on request

Other connection types on request.

TW01 - Characteristics



Features

- Connection in seconds
- No hand tightening required
- Sealing irregular or rough surfaces
- Stroke limitation
- Simple seal replacement
- Ergonomic design
- High-grade materials

The WEH® TW01 Quick connector reliably and quickly seals inside bores, irregular or rough holes and female threaded components. Fitted with elastomer seals ideal for sealing out of round and rough surfaces and clearing large tolerances on the test piece. The connector only clamps itself firmly over the sealing rubber of the test piece, but does not have any retaining function. Therefore a fixture must be used.

As a standard WEH® TW01 is equipped with a stroke limitation.
Because of the pneumatic actuation, the connector is particularly well suited for automation of test procedures.
A number of accessories are available for manual actuation of the pilot pressure,
e.g. hand slide valve or pneumatic coupling with control/venting fitting (see accessories).

For WEH® TW01 Connectors standard shaft extensions of 1“ (25.4 mm) or 2“ (50.8 mm) are available to seal surfaces which are inaccessible to standard TW01 connectors.
Special versions, e.g. twin connectors for sealing ports in close proximity to each other are available on request.



TW01 with
hand slide valve

Application

Quick connector for pressure and vacuum testing of straight tubes and bores (sealing the internal tube diameter).
Leak testing: pressure decay, underwater / helium tests.
Other applications: filling, pressure and function tests, flushing, etc.
Components: vessels, plastic vessels, medical components, valves, pumps, filter, pressure vessels, tube connections, etc.

Max. allowable operating pressure PS
Vacuum up to 9 bar (130 bar)

Pilot pressure
Body size 01: 6 - 9 bar (90 - 175 psi) compressed air
Body size 1 - 8: 6 - 12 bar (90 - 175 psi) compressed air

Temperature range
+5 °C up to +80 °C (+41 °F up to +176 °F)

Sealing material
Main seal of chloroprene / o-rings of NBR
Urethane seals for high-wear applications are optional.

Other designs on request

Material
Housing, piston and spacer: aluminium

Leak rate
$1x10^{-3}$ mbar x l/s

Example of use



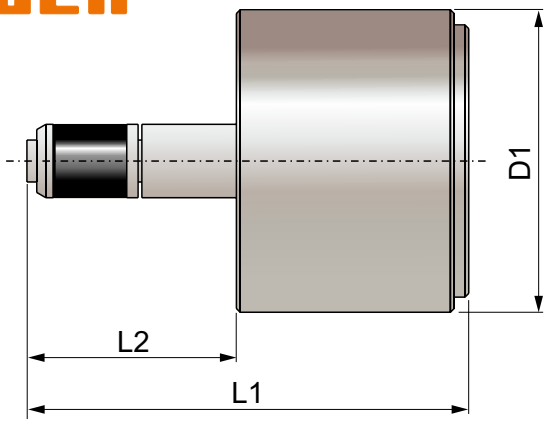

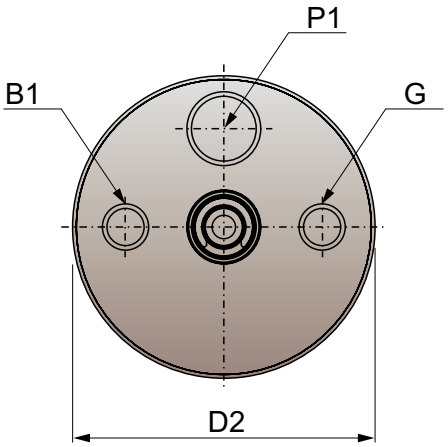

Body size	B1 (female thread)	P1 (female thread)	G**	D1	D2	L1	L2
01	M5	M5	M5	32	20,5	55,5	22
1	G1/8	G1/8	M6	40	26	70,5	28
2	G1/8	G1/8	M6	40	26	66,5	23,5
3	G1/8	G1/8	M6	60	41	74,5	40
4	G1/8	G1/8	M6	60	41	71,5	37
5	G1/2	G1/8	M6	89	60	106,5	59,5
6	G1/2	G1/8	M6	89	60	101	54
7	G3/4	G1/8	M6	107	76,5	94	57,5
8	G3/4	G1/8	M6	107	76,5	94	57,5

* on request
** thread for fixturing device

Straight tube, internal diameter

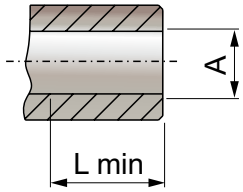

Code	Part no. Main seal set	Part no. Replacement seals	Body size	Sealing range internal tube ØA	L min*
C1-139903	B200B-141363	B200B-141298	01	7,7 - 8,3	13,5
C1-141179	B200B-141364	B200B-141299	01	8,4 - 10	13,5
C1-141180	B200B-141365	B200B-141300	1	10 - 12	15
C1-141181	B200B-141366	B200B-141301	1	12 - 14	15
C1-141182	B200B-141367	B200B-141302	1	14 - 16	15
C1-141183	B200B-141369	B200B-141303	2	16 - 18	15
C1-141184	B200B-141370	B200B-141304	2	18 - 20	15
C1-141185	B200B-141371	B200B-141305	2	20 - 22	15
C1-141186	B200B-141372	B200B-141306	3	22 - 24	28
C1-141187	B200B-141373	B200B-141307	3	24 - 26	28
C1-141188	B200B-141374	B200B-141308	3	26 - 28	28
C1-141189	B200B-141375	B200B-141309	4	28 - 30	28
C1-141190	B200B-141376	B200B-141310	4	30 - 32	28
C1-141191	B200B-141377	B200B-141312	4	32 - 34	28
C1-141192	B200B-141378	B200B-141313	5	34 - 37	41
C1-141193	B200B-141379	B200B-141314	5	37 - 40	41
C1-141194	B200B-141380	B200B-141315	5	40 - 43	41
C1-141195	B200B-141381	B200B-141316	6	43 - 47	41
C1-141196	B200B-141383	B200B-141317	6	47 - 51	41
C1-141197	B200B-141386	B200B-141318	6	51 - 55	41
C1-141198	B200B-141387	B200B-141319	7	55 - 58,5	41,5
C1-141199	B200B-141391	B200B-141321	7	58,5 - 62,1	41,5
C1-141200	B200B-141392	B200B-141322	7	62,1 - 65,6	41,5
C1-141201	B200B-141393	B200B-141323	8	65,6 - 69,2	41,5
C1-141202	B200B-141394	B200B-141324	8	69,2 - 72,7	41,5
C1-141203	B200B-141395	B200B-141325	8	72,7 - 76	41,5

* Lmin: minimum insertion length of test piece
Other connection sizes on request

Other connection types on request.

TW01 Extension

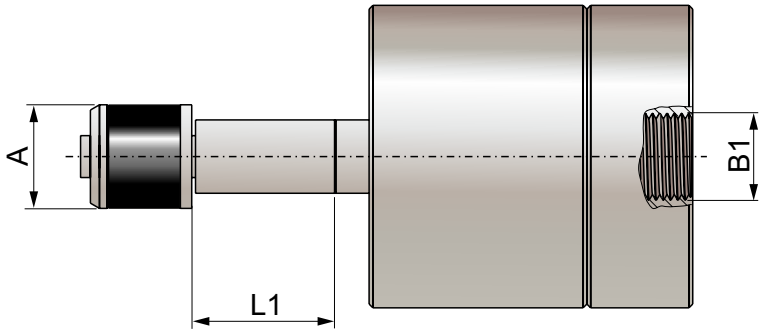



Code	Description	A	B1	L1
On request	TW01 with 1“ extension	On request	On request	25,4
On request	TW01 with 2“ extension	On request	On request	50,8

Shaft extensions in other lenghts on request

TW02 - Characteristics



Features

- Connection in seconds
- No hand tightening required
- Sealing irregular or rough surfaces
- Simple seal replacement
- Ergonomic design
- High-grade materials

The WEH® TW02 Quick connector reliably and quickly seals tubes, hoses and male threaded components. Fitted with elastomer seals, the TW02 is ideal for sealing out of round and rough surfaces and clearing large tolerances on the test piece.
The connector only clamps itself firmly over the sealing rubber of the test piece, but does not have any retaining function. Therefore a fixture must be used.
When using hose connections, WEH® TW02 is additionally equipped with a counterholder.
Because of the pneumatic actuation, the connector is particularly well suited for automation of test procedures.
A number of accessories are available for manual actuation of the pilot pressure, e.g. hand slide valve or pneumatic coupling with control/venting fitting (see accessories).
Special versions, e.g. twin connectors for sealing ports in close proximity to each other are available on request.

Application

Quick connector for pressure and vacuum testing of straight tubes, hoses and components with bead or collar (sealing on external tube diameter).

Max. allowable operating pressure PS
Vacuum up to 35 bar (510 psi)

Temperature range
+5 °C up to +80 °C (+41 °F up to +176 °F)

Pilot pressure
6 - 12 bar (90 - 175 psi) compressed air

Material
Housing, piston and seal housing: aluminium

Sealing material
Main seal of chloroprene / o-rings of NBR
For body size 001 main seal and o-rings of NBR.
Urethane seals for high-wear applications are optional.

Leak rate
$1x10^{-3}$ mbar x l/s

Example of use

Other designs on request

Note: For pressurized applications the TW02 must be secured by a fixturing device.
On vacuum applications the TW02 does not need to be secured. For operating pressures above 10 bar (145 psi) we recommend urethane seals.



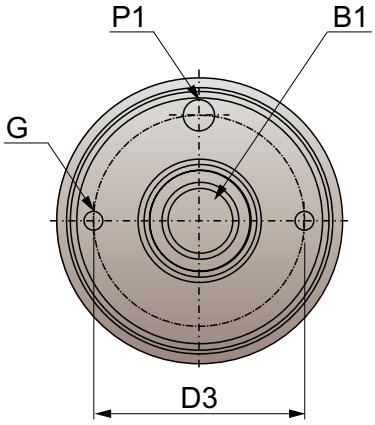

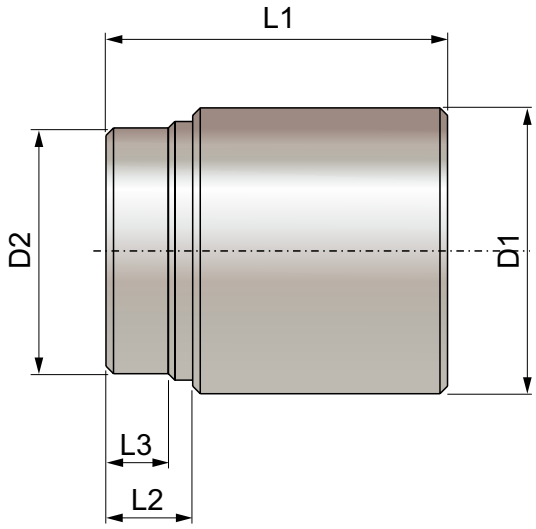

Body size 001 - 3: 2 threads ‘G‘ for fixturing device

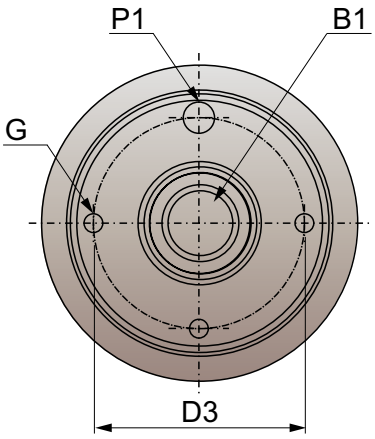

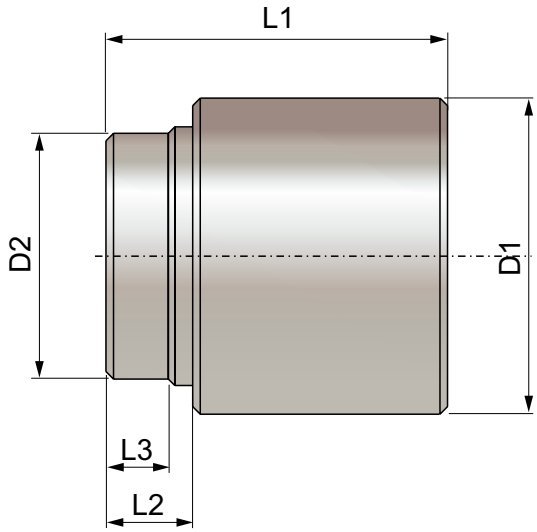

Body size 4 - 6: 3 threads ‘G‘ for fixturing device

Body size	B1 (female thread)	P1 (female thread)	G**	D1	D2	D3	L1	L2	L3
001*	G 1/8	M5	M3	21,5	-	16	44	-	-
01	G 1/8	M5	M5	38	32,5	28	52,5	10	9
1	G 1/4	G 1/8	M6	56,5	47	41,5	69,5	10	8,5
2	G 1/2	G 1/8	M6	79	69	63,5	89	23	14,5
3	G1	G 1/8	M6	107,5	91	82,5	114	38	29,5
4	G1 1/2	G 1/8	M6	139,5	122	108	117	38	28
5	G2	G 1/8	M10	177,5	162	140	117	35,5	35,5
6	G2 1/2	G 1/8	M10	190	174,5	155,5	126,5	35,5	35,5

* for body size 001, ‘P1‘ is located on the diameter of the connector instead of on the face
** thread for fixturing device

Straight tube, external diameter

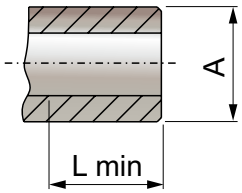

Code	Part no. Main seal set	Replacement seals	Body size	Sealing range external tube ØA	L min*
C1-141938	B200B-142085	B200B-142358	001	0,8 - 1,3	4
C1-141948	B200B-142090	B200B-142359	001	1,3 - 2	4
C1-141949	B200B-142091	B200B-142360	001	2 - 3,3	4
C1-141950	B200B-142092	B200B-142361	01	2,5 - 4,6	15
C1-141952	B200B-142094	B200B-142362	01	4,6 - 6,6	15
C1-141953	B200B-142095	B200B-142363	01	6,6 - 8,6	15
C1-141954	B200B-142096	B200B-142364	01	8,6 - 10,7	15
C1-141955	B200B-142097	B200B-142365	01	10,7 - 13	15
C1-141956	B200B-142098	B200B-142366	1	11 - 13	15,5
C1-141957	B200B-142099	B200B-142367	1	13 - 15	15,5
C1-141958	B200B-142100	B200B-142368	1	15 - 17	15,5
C1-141959	B200B-142101	B200B-142369	1	17 - 19	15,5
C1-141960	B200B-142102	B200B-142370	1	19 - 21	15,5
C1-141964	B200B-142120	B200B-142371	2	20 - 22	27
C1-141966	B200B-142121	B200B-142372	2	22 - 24	27
C1-141967	B200B-142122	B200B-142373	2	24 - 26	27
C1-141968	B200B-142123	B200B-142374	2	26 - 28	27
C1-141969	B200B-142124	B200B-142375	2	28 - 30	27
C1-141970	B200B-142125	B200B-142376	2	30 - 32	27
C1-141971	B200B-142126	B200B-142377	2	32 - 34	27
C1-141972	B200B-142127	B200B-142378	2	34 - 36	27
C1-141973	B200B-142128	B200B-142379	2	36 - 38	27
C1-141974	B200B-142129	B200B-142380	3	38 - 41	42
C1-141975	B200B-142130	B200B-142381	3	41 - 44	42
C1-141976	B200B-142131	B200B-142382	3	44 - 47	42
C1-141977	B200B-142132	B200B-142383	3	47 - 49,8	42
C1-141978	B200B-142133	B200B-142384	4	49,8 - 53	42
C1-141980	B200B-142134	B200B-142385	4	53 - 56	42
C1-141981	B200B-142135	B200B-142386	4	56 - 59	42
C1-141982	B200B-142136	B200B-142387	4	59 - 62	42
C1-141983	B200B-142137	B200B-142388	4	62 - 65	42
C1-141984	B200B-142138	B200B-142389	4	65 - 68	42
C1-141985	B200B-142139	B200B-142390	4	68 - 71	42
C1-141986	B200B-142140	B200B-142391	4	71 - 74	42
C1-141987	B200B-142141	B200B-142392	4	74 - 77	42

* Lmin: minimum insertion length of test piece
Other connection sizes on request

Other connection types on request..

Special Solutins

Example:
TW02 for rubber hose testing





gepef

Hydrogen refueling connectors

WEH® H_2 Fueling components

Excellent quality for maximum reliability

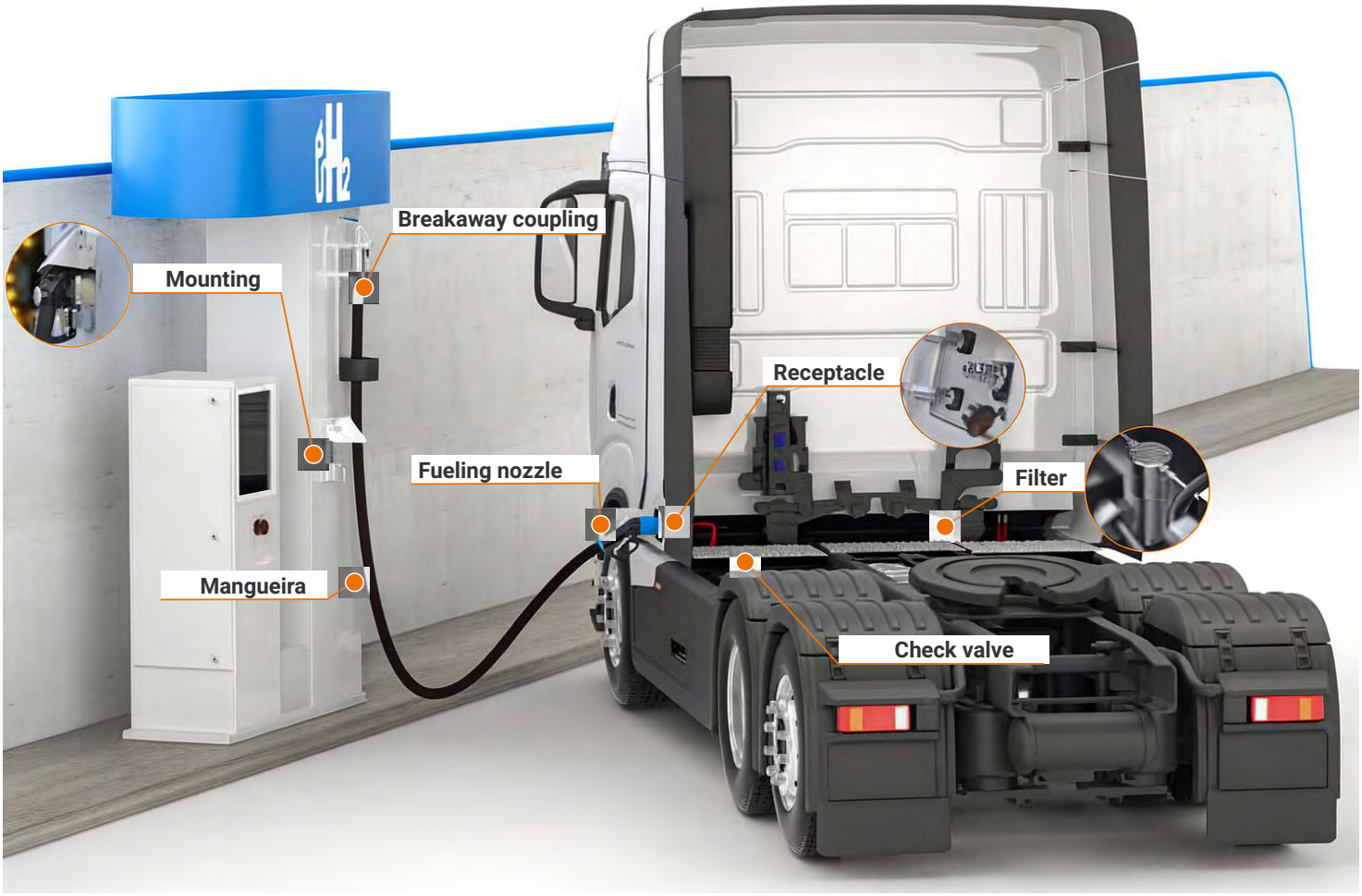



1.1 Introduction

WEH recognized early on that the regenerative energy source hydrogen has a future and developed the first hydrogen refueling components more than 25 years ago.
As a pioneer, WEH set international standards.
Today, hydrogen fueling stations and fuel cell vehicles all over the world are almost exclusively equipped with WEH® refueling components.

We are a reliable partner to many industries
Thanks to intensive research and development, WEH has become a reliable and highly valued partner to the automotive industry in this cutting-edge technology.
Our products can easily withstand pressures of up to 1,000 bar. Because high pressure has always been our passion.
WEH high-pressure components also impress with their reliability and safety in many other sectors, such as mechanical engineering, the chemical and gas industry, refrigeration and air conditioning technology.

Everything from a single source with WEH
Today, WEH develops, produces and distributes a complete product line for hydrogen refueling. From filling couplings, breakaway couplings, filling hoses and filters at the filling station to tank nipples and non-return valves in the vehicle.
WEH‘s innovative refueling solutions have contributed to a much better acceptance in society. Our product solutions are a healthy mix of innovation and tradition and ensure that the driver has a familiar refueling experience.

We focus on the future
Driven by our passion, intensive research and extensive investments, we continue to work on Innovative products for the future market of hydrogen refueling.



Our **mission**

For more than 25 years, we have been developing future-oriented H_2 refueling technology solution. Pioneering is deep in our DNA, so when it comes to hydrogen: we lead at the frontier.

Our **Goal**

We strive to meet (and delightfully exceed) our customers' expectations--from design to service. By consistently delivering high-quality, safe and user-friendly products, this goal has grown to become our promise.



Innovate H_2 Products for real-world applications

Our product solutions touch all aspects of the refueling process. Receptacles, check valves and filters for vehicles. H2 systems, 'up to fueling' nozzles, breakaway couplings, filters, check valves and hoses for fueling stations. Whatever your hydrogen need, we have you covered.

WEH® H_2 Components Your benefits

- Balanced design
- Unique user-friendliness
- Highest functionality and safety
- Reliability & efficiency
- High flow rate
- Short filling times
- Optimum protection for operators and components
- Minimal downtime
- Low maintenance requirements
- Robust & durable

Your Application

Our Core Competencies

Global Sales Network
Active in 60+ countris

Passion for High-Pressure
Components for multiple industries

World-Class Engineering
To meet specific product needs on request

In-house Teste Center
Extensive testing during development

Pioneers – We set the Standard
Trailblazing product solutions

Goods Issue Inspection
We inspect each product individually

50+ years Experience
More than 25 of those spent innovating in the hydrogen sector

Quality – Made in Germany
ISO 9001:2015
ISO 14001:2015
Pressure Equipment Directive 2014/68/EU Annex III, Module H

Environmental Management
Sustainable products and actions

Service & Maintenance
Directly from the manufacturer

Maximum Safety
Through exceptional products and high-quality materials

Sophisticated systems
for a demanding application
The WEH® hydrogen product line was developed to meet the requirements of high pressures in the refueling area. All components are designed to with stand extreme flow rates and temperature conditions.

Test laboratory
Modern testing facilities guarantee comprehensive testing of our products from the design phase through to series production. Our 100 % quality assurance is second to none.

Unique jaw locking mechanism
All filling couplings have the jaw locking mechanism developed by WEH. The collets are insensitive to contamination and the low surface pressure minimizes wear.

More safety through filter technology
Our integrated dirt filter prevents dirt particles ingress of dirt particles from the outside in order to leaks as far as possible.

The right decision with certainty
WEH® hydrogen products have a high safety standard. This is the only way self-service operation is even possible.

FUELING NOZZLES / BREAKAWAY COUPLINGS

And their common uses:

Overview fueling nozzles			
Product family	Page	Car	Bus/truck
TK20-S1 H_2 70 MPa ENR	14	✓	✓
TK20-S1 H_2 70 Mpa	20	✓	
TK20-S2 H_2 35 MPa ENR	40	✓	
TK20-S2 H_2 35 Mpa	46	✓	
TK20-S3 H_2 35 MPa ENR Medium-Flow	52		✓
TK20-S3 H_2 35 MPa Medium-Flow	58		✓
TK16 H_2 35 MPa EN	64	✓	
TK16 H_2 35 MPa	68	✓	
TK16 H_2 High-Flow with data interface	72		✓
TK16 H_2 High-Flow	76		✓
TK25 H_2	90		✓

Overview defueling nozzles		
Product family	Page	Discharging of H_2 fuel tanks - car
TK6 H_2	130	✓

Overview breakaway couplings					
Product family	Page	Car	Car - Inline	Bus/truck	Bus/truck fueling station
TSA30-S1 H_2 70 MPa	26	✓			
TSA31-S1 H_2 70 MPa	30		✓		✓
TSA1 H_2	80	✓		✓	
TSA2 H_2	86		✓		✓
TSA5 H_2	94			✓	
TSA6 H_2	98				✓

FILTERS

Overview filters					
Product family	Page	Car	Bus/truck	Car fueling station	Bus/truck fueling station
TSF2 H_2	122	✓	✓	✓	✓
TSF2 H_2 Koaleszenz	126	✓	✓	✓	✓
TSF4 H_2	128	✓	✓	✓	✓

PRESSURE RANGE / CODING

All WEH® Fueling nozzles and receptacles have a coding for gas type and the pressure range thus not allowing connection to natural gas vehicles and other pressure ranges. The following connection possibilities are given:

OVERVIEWI	Receptacle	TN1 H25	TN9-S2 H35 TN1 H35	TN9-S3 H35 Medium-Flow TN1 H35 High-Flow	TN9-S1 H70	TN5 H35
Fueling nozzle	Pressão PN	25 MPa	35 MPa	35 MPa	70 MPa	35 MPa
TK16 H_2	25 MPa	✓	✓	✓	✓	
TK16 H_2 35MPa TK16 H_2 35 MPa ENR**	35 MPa		✓	✓	✓	
TK16 H_2 Alto fluxo TK16 H_2 Alto fluxo com IR*	35 MPa			✓		
TK20-S2 H_2 35 MPa TK20-S2 H_2 35 MPa ENR**	35 MPa		✓	✓	✓	
TK20-S3 H_2 35 MPa Fluxo Médio TK20-S3 H_2 35 MPa ENR** Fluxo Médio	35 MPa			✓		
TK20-S1 H_2 70 MPa TK20-S1 H_2 70 MPa ENR**	70 MPa				✓	
TK25 H_2	35 MPa					✓

* IR = Infrarot-Datenschnittstelle / ** ENR = austauschbare Infrarot-Datenschnittstelle

Note on ISO 17268-1:2025 Standard:
With the publication of ISO 17268-1:2025, the designation and coding of the H35 High-Flow receptacles and nozzles will change. The applicable coding for each product is specified in the respective article.
Our new products, the TK20 Fueling nozzle and TN9 Receptacle, already comply with the updated coding according to ISO 17268-1:2025.
For the TK16 Fueling nozzle and TN1 Receptacle, the coding is still based on ISO 17268:2012.
If you have any questions, our Sales Team will be happy to assist you.

INTERNATIONAL STANDARDS AND APPROVALS

The following overview shows the standards for which WEH® Products can be certified. For detailed information see respective product.

- Regulation (EC) No. 79/2009*
- ISO 17268
- SAE J2601
- TEX, NEC, KTL, CC

* All products with EC79 approval are also suitable for use in stationary systems.
When using the products in stationary systems, please check the necessity of a conformity assessment procedure acc. to the Pressure Equipment Directive 2014/68/EU and contact us if corresponding documentation is required.
Please also refer to the note on page 116, Explanation on the Pressure Equipment Directive.

For reasons of precaution, we'd like to point out that

a) regarding the delivery of each article acc. to the respective order confirmation - in particular concerning ECE / EC79 articles - WEH does not confirm the fulfilment of additional requirements of the concerned end customer,

b) WEH is not subject to any external reporting obligation with regard to external change management (see page 114) and

c) WEH does not confirm the replacement of the product in the form of a regular series delivery.
Exclusions acc. to a) - c) can be agreed with the conclusion of a customer-specific project with corresponding special conditions.

CERTIFIED QUALITY MANAGEMENT

Our high quality standards are achieved by a practiced quality management and confirmed by certification according to international quality standards.

- **Quality Management System DIN EN ISO 9001:2015**
- **Environmental Management System DIN EN ISO 14001:2015**

MEMBERSHIPS

WEH is a member of the German Hydrogen and Fuel Cell Association and the Hydrogen.Bavaria Center (H2.B).

OUR COMMITMENT TO AN EMISSION-FREE FUTURE

Today, WEH is the global market leader with its refueling systems and a partner to the automotive industry. In addition, WEH is involved in numerous national and international projects worldwide to promote alternative drives and is therefore also a driving force for a mobile society with a future.

We present three of these exciting projects here. They are examples of numerous inquiries and our commitment, which we are happy to continue.



Full throttle on the race track
We are involved in numerous projects around the world to promote alter native fuels in order to realize a climate-neutral future and environmentally friendly mobility.

Among other things, we support the Forze racing team of the Dutch University of Delft with 70 MPa components for a hydrogen-powered powered racing car.



Hydrogen on the water
The Dutch HydroMotion team at Delft University has developed the first hydrogen boat “Flying Hydrogen Boat”. As a leading manufacturer of refueling components for hydrogen, we were delighted to support the student project.

We have provided these WEH® products free of charge:

- **WEH® Check Valve TVR1 H_2**
- **WEH® Receptacle TN1 H_2**

The Yacht Club has awarded the HydroMotion team the “Next Generation Prize” for this innovative and progressive project.



With pressure on the rails
The world‘s first hydrogen train for regional transportation was unveiled in 2016. It runs near Bremerhaven.

The “Coradia iLint” train developed by the French train manufacturer Alstom is equipped with WEH® TN1 H2
35 MPa receptacle. On the roof of
the train, the fuel cells convert the hydrogen carried in the tank
hydrogen into electrical energy and thus provide the propulsion. The train is of course refueled using the WEH® TK16 H2
35 MPa fueling nozzle.

Description



Features
- Type C nozzle acc. to SAE J2600 resp. ISO 17268
- Very high flow rate
- Easy operation / single-handed operation
- Max. allowable operating pressure (MAWP according to ISO 19880-1:2020)
- Exchangeable data interface (ENR)
- Integrated purging line for nitrogen flushing
- Prepared for dispenser mounting with purging system
- WEH® EASY-TURN 250° swivel joint
- Protecion against impact and cold
- Plastic thermal protection
- Hand grip with magnet
- Compatible with pressure stage H70 according to ISO 17268 (see table below)

new

The WEH® TK20-S1 H_2 70 MPa ENR Fueling nozzle with exchangeable data interface (ENR = exchangeable nozzle receiver) was developed for fast filling of cars with compressed, gaseous hydrogen (CGH2). Through to the larger nominal width, refueling with 90 g/s or higher is possible. In addition, this filling coupling is designed for a maximum operating pressure of 96.25 MPa (= MAWP according to ISO 19880-1:2020)

In addition, the new TK20-S1 H_2 70 MPa ENR has the same tried and tested features as the already well-known TK17 H2 70 MPa ENR.
The fueling nozzleis additionally equipped with a purging line that allows purging with nitrogen during and after refueling process. This can prevent ingress of moisture and the formation of ice crystals during filling with precooled.

The WEH® TK20-S1 H_2 70 MPa ENR offers optimum safety for the operator thanks to the locking mechanism. The Fueling nozzle remains connected to the receptacle until the locking mechanism is released by the operator.

TN H_2 (Except TN5 H_2)

TK20-S1 H_2 70 MPa ENR	25 MPa	35 MPa	35 MPa MF*	35 MPa HF**	70 MPa
70 MPa					✓

*MF = Medium-Flow acc. to ISO 17268-1:2025
** HF = High-Flow acc. to ISO 17268:2012

Application
Fueling nozzle for hydrogen fast filling of cars at self-service fueling stations.

Technical data

Characteristics	Basic version
Flushing line male / female thread	6/4 mm
Nominal pressure	PN = 70 MPa
Max. Allowable Operating Pressure	MAWP = 96.25 MPa according to ISO 17268 (PS = 962.5 bar)
Media Temperature Range	-40 °C up to +85 °C
Ambient Temperature Range	-40 °C up to +85 °C
Material	Corrosion resistant
Sealing Material	Hydrogen resistant
Nozzle Type	Type C acc. to SAE J2600:2015 and previous resp. ISO 17268:2020 and previous
Coding	H70 Grade D acc. to ISO 17268-1:2025
Design	With plastic thermal protection, cold protection, hand grip with magnet, exchangeable data interface acc. to SAE J2799 and integrated purging line
Weight	Approx. 2.65 kg
Medium for Purging*	Nitrogen or compressed air
Media Temperature Range Purging Medium*	-40°C to +85°C (most effective above 0°C)
Hydrogen flow rate	90 g/s at 8 MPa pressure drop (F90-P8) Pressure drop values for 120 g/s on request
Flow Rate During Purging	500 Nl/h at max. 12 bar purging pressure
Conformity / Tests / Approvals	IR data interface: SAE J2799 and ATEX, NEC, KTL or CCC Design validation based on ISO 17268-1:2025

* The efficiency of the purging line has been successfully tested in compliance with the freezing test 7,26 from ISO 17268

Ordering - WEH® TK20-S1 H_2 70 MPa ENR Fueling nozzle

approx. dimensions (mm)

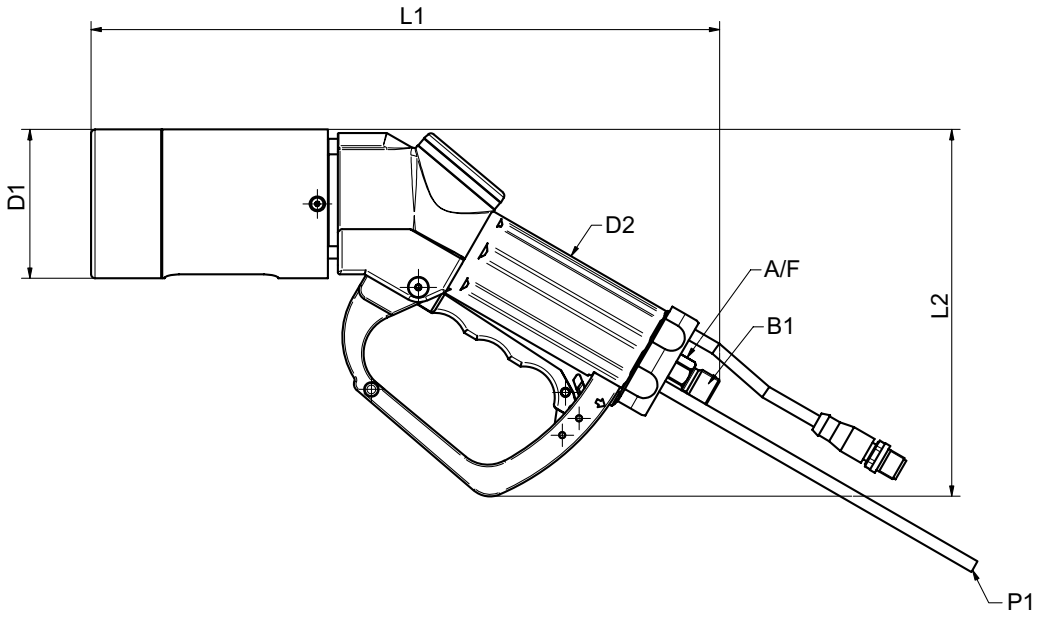

Part no.	Description	Pressure (MAWP)	B1 (male thread)	P1	L1	L2	D1	D2	A/F
C1-188722	TK20-S1H_2 70MPa ENR	96.25 MPa	UNF 9/16"–18 *	Ø 6	304	177	72	46	15

* 60° inner cone
Fueling assemblies consisting of fueling nozzle, hose set and breakaway coupling are available on request.

Accessories

The following accessories are available for the WEH® TK20-S1 H_2 70 MPa ENR Fueling nozzle:

Complete set consisting of Fueling nozzle TK20-S1, Breakaway coupling TSA30-S1 and Hose set.

The TK20-S1 Complete set set new standards: thanks to improved flow characteristics, it offers a 40 % lower pressure drop at a flow rate of 90 g/s.

Part. no.	Description
On request	Complete set TK20-S1



*Values may vary depending on the test setup (e.g. Hose length, receptacle).

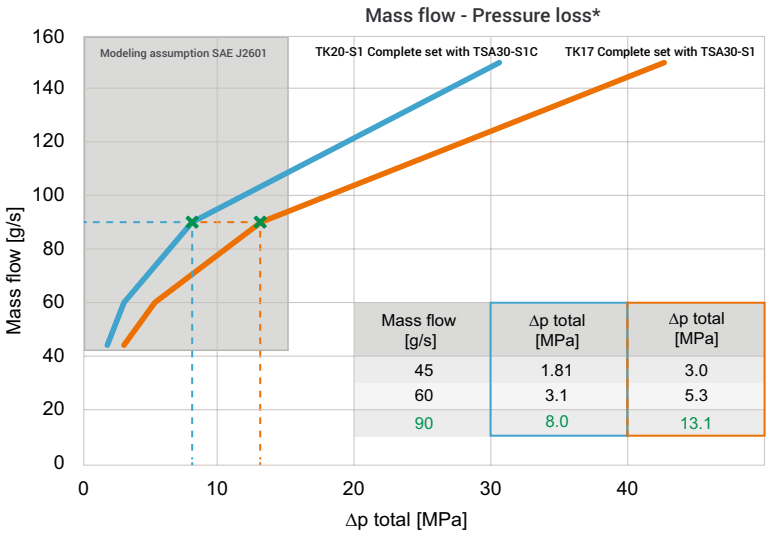

Hose set

Hose set for connecting fueling nozzle and TSA30 H_2 70 MPa breakaway coupling, complete with filling hose, data cable, purging line and braided protection hose as cover.
Design filling hose: max. operating pressure PS: 96.25 MPa / nominal bore fitting (TNW): 4.5 mm / media temperature range: -40 °C up to +85 °C



Part no.	B1/B2 (female thread)	P1 / P2	Hose length
E68-161886	UNF 9/16“-18*	Ø6	3 m
E68-161887	UNF 9/16“-18*	Ø6	4 m
E68-161888	UNF 9/16“-18*	Ø6	5 m

* DKJ 58°

Dispenser mounting

The fueling nozzle can also be used with a dispenser mounting, which is installed on the fuel dispenser.
Advanced dispenser mounting for fueling nozzles
With inductive sensor and M12x1 connector, explosion-proof according to ATEX

approx. dimensions (mm)



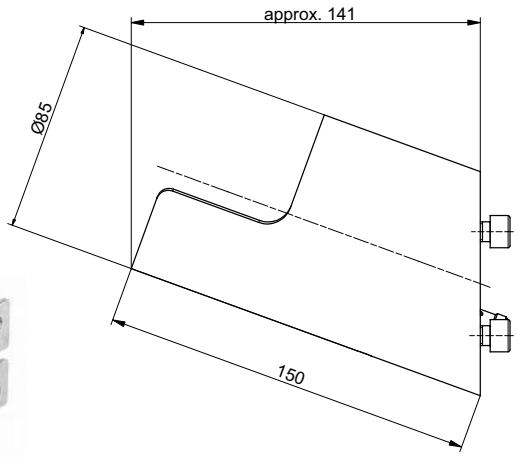

mounting bracket

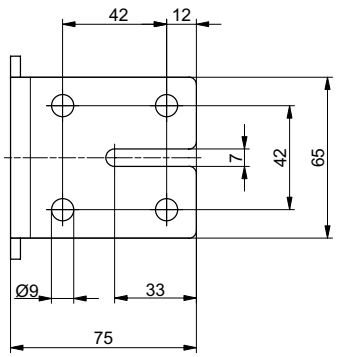

Part no.	Description
C1-190361	Dispenser mounting for TK20 H_2 (Including mounting bracket, installable in three different designs)

Classic dispenser mounting for fueling nozzles

With magnetic field sensor and 2 m cable, explosion-proof according to ATEX

approx. dimensions (mm)



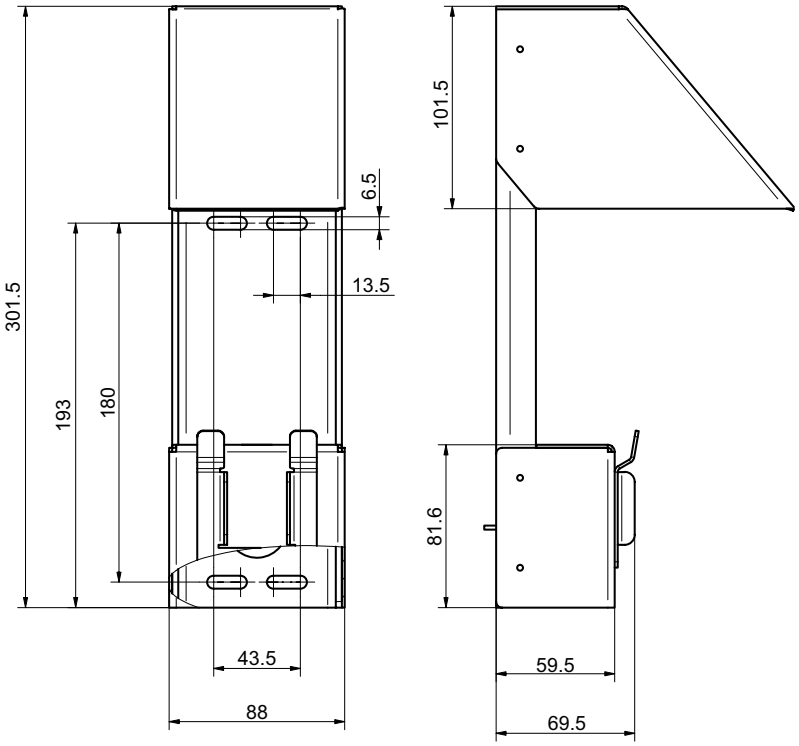

Part No.	Description
C1-191367	Dispenser mounting for TK20 H_2

Service receptacle WEH® TNS1 H_2

To prevent damage in the fueling nozzle while leak testing during maintenance in the course of which pressure is applied, we recommend the use of a service receptacle. The receptacle also protects the fueling nozzle from dirt ingress whilst not in use.



Part no.	Description	Pressure (MAWP)
C1-148079	TNS1 H_2 Service receptacle incl. protection cap	87,5 MPa

WEH® Breakaway coupling

For the suitable TSA30-S1 H_2 70 MPa breakaway coupling, please see page 26.

Data cable

Part no.	Description	Hose length
E68-96194	Data cable suitable for 4 m hose set	4,45m
E68-96193	Data cable for connecting with the converter	3,45m

Other lengths on request

Spare parts

Various parts are available as spares for the WEH® TK20-S1 H_2 70 MPa ENR Fueling nozzle.



Position	Part No.	Description
1	W186127	Impact protection sleeve
2	W172310	IR data interface ATEX, NEC, KTL or CCC
3	E80-84030	Locking lever
4	E69-161748	Logo cap
5	W124542	Hand grip
6	E80-59738	Logo plate
7	W186082	Clamping nut for protective hose
8	E69-157491	Label
10	C1-161187	Handle protector
	On request	Maintance spray

When ordering please specify the part no. engraved on the fueling nozzle.

Description



Features
- Type C nozzle acc. to SAE J2600 resp. ISO 17268
- Very high flow rate
- Easy operation / single-handed operation
- Max. allowable operating pressure 96.25 MPa (MAWP according to ISO 19880-1:2020)
- Integrated purging line for nitrogen flushing
- WEH® EASY-TURN 250° swivel joint
- Optimized impact protection
- Plastic thermal protection
- Hand grip with magnet
- Compatible with pressure stage H70 according to ISO 17268-1:2025 (see table below)

new

The WEH® TK20-S1 H_2 70 MPa Fueling nozzle was developed for fast filling of cars with compressed, gaseous hydrogen (CGH2). Through to the larger nominal width, refueling with 90 g/s or higher is possible. In addition, this filling nozzle is designed for a maximum operating pressure of 96.25 MPa (= MAWP according to ISO 19880-1:2020).

I n addition, the new TK20-S1 H2 70 MPa has the same tried and tested features as the already well-known TK17 H2 70 MPa.

The fueling nozzle is additionally equipped with a purging line that allows purging with nitrogen during and after refueling process. This can prevent ingress of moisture and the formation of ice crystals during filling with precooled hydrogen.

The WEH® TK20-S1 H_2 70 MPa offers optimum safety for the operator thanks to the locking mechanism. The Fueling nozzle remains connected to the receptacle until the locking mechanism is released by the operator.

TN H_2 (Except TN5 H_2)

TK20-S1 H_2 70 MPa	25 MPa	35 MPa	35 MPa MF*	35 MPa HF**	70 MPa
70 MPa					✓

*MF = Medium-Flow acc. to ISO 17268-1:2025
**HF = High-Flow acc. to ISO 17268:2012

Application
Fueling nozzle for hydrogen fast filling of cars at self-service fueling stations.

Technical data

Characteristics	Basic version
Purging line Outer / inner diameter	6/4 mm
Nominal Pressure	PN = 70 MPa
Max. Allowable Operating Pressure	MAWP = 96.25 MPa according to ISO 17268 (PS = 962.5 bar)
Medium*	Hydrogen
Media Temperature Range	-40 °C up to +85 °C
Ambient Temperature Range	-40 °C up to +85 °C
Material	Corrosion resistant
Sealing Material	Hydrogen resistant
Nozzle Type	Type C acc. to SAE J2600:2015 and previous resp. ISO 17268:2020 and previous
Coding	H70 according to ISO 17268-1:2025
Design	With plastic thermal protection / Optimized impact protection / Integrated purging line / Hand grip with magnet
Weight	Approx. 2.65 kg
Medium for Purging	Nitrogen or compressed air
Media Temperature Range Purging Medium	-40°C to +85°C (most effective >0°C)
Hydrogen flow rate	90 g/s at 1.3 MPa pressure drop (F90-P1,3)
Flow Rate During Purging	500 Nl/h at max. 12 bar purging pressure
Conformity / Tests / Approvals	Design validation based on ISO 17268-1:2025

* Suitable for pre-cooled hydrogen

Ordering - WEH® TK20-S1 H_2 70 MPa Fueling nozzle

approx. dimensions (mm)

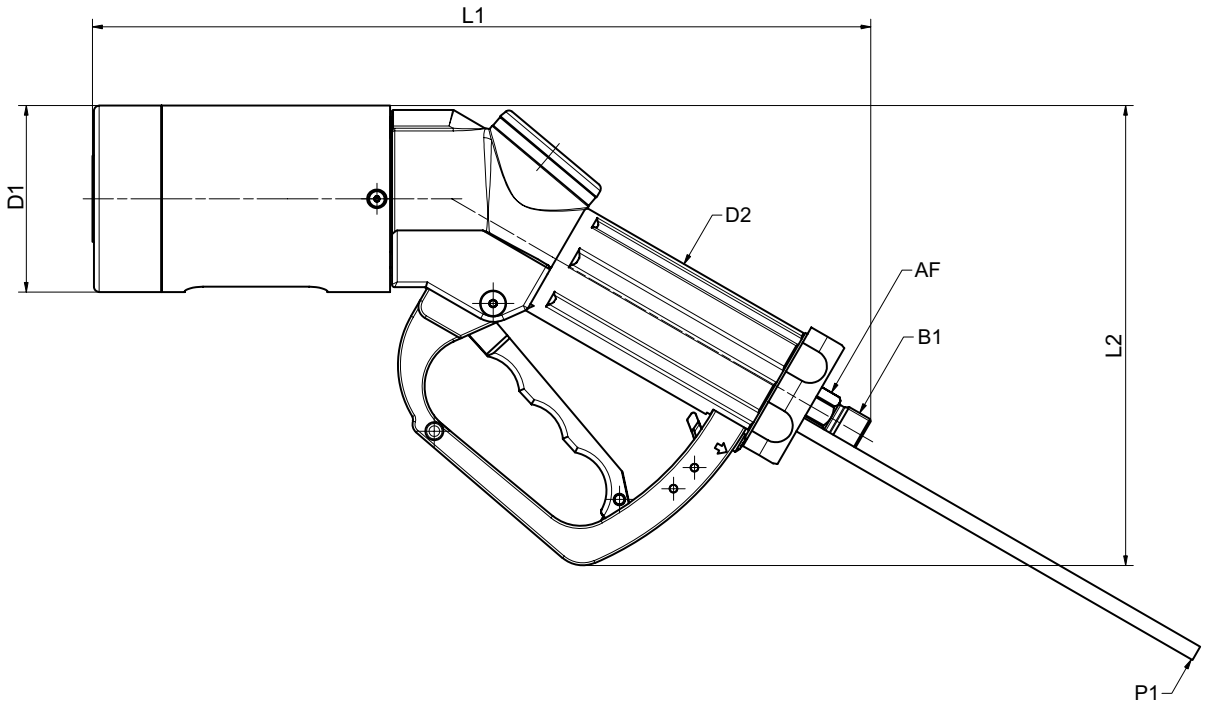

Part no.	Description	Pressure (MAWP)	B1 (male thread)	P1	L1	L2	D1	D2	A/F
C1-188782	TK20-S1H_2 70MPa	96.25 MPa	UNF 9/16"–18 *	6/4	300	178	72	46	15

* 60° inner cone
Fueling assemblies consisting of fueling nozzle, hose set and breakaway coupling are available on request.

Accessories

The following accessories are available for the WEH® TK20-S1 H_2 70 MPa Fueling nozzle:

Fueling assembly consisting of Fueling nozzle TK20-S1, Breakaway coupling TSA30-S1 and Hose set

The TK20-S1 Fueling assembly set new standards: thanks to improved flow characteristics, it offers a 40 % lower pressure drop at a flow rate of 90 g/s.

Part. no.	Description
On request	Fueling assembly TK20-S1



*Values may vary depending on the test setup (e.g. Hose length, receptacle).

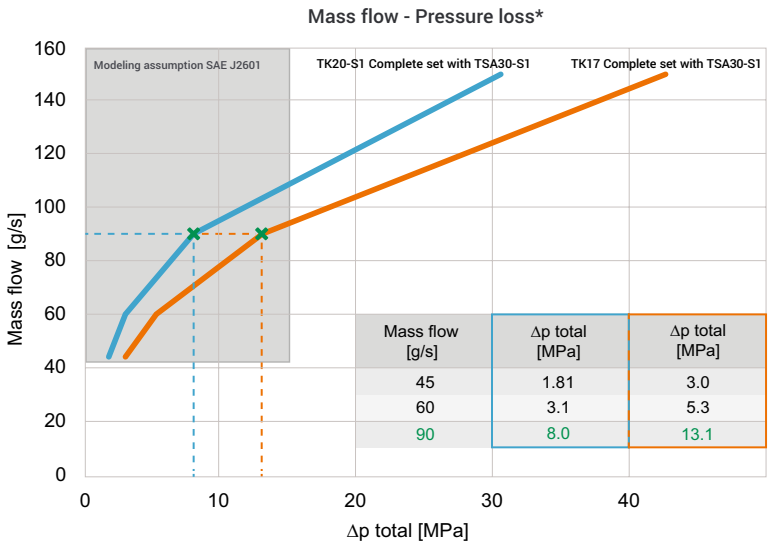

Mass flow [g/s]	Δp total [MPa]	Δp total [MPa]
45	1.81	3.0
60	3.1	5.3
90	8.0	13.1

Hose set

Hose set for connecting fueling nozzle and TSA30 H_2 70 MPa breakaway coupling, complete with filling hose, data cable, purging line and braided protection hose as cover.

Design filling hose: max. operating pressure PS: 96.25 MPa / nominal bore fitting (TNW): 4.5 mm / media temperature range: -40 °C up to +85 °C



Part no.	B1/B2 (female thread)	P1 / P2	Hose length
C1-189992	UNF 9/16“-18*	Ø6	3 m
C1-189993	UNF 9/16“-18*	Ø6	4 m
C1-189994	UNF 9/16“-18*	Ø6	5 m

* DKJ 58°

Dispenser mounting

The fueling nozzle can also be used with a dispenser mounting, which is installed on the fuel dispenser.
Advanced dispenser mounting for fueling nozzles
With inductive sensor and M12x1 connector, explosion-proof according to ATEX

approx. dimensions (mm)



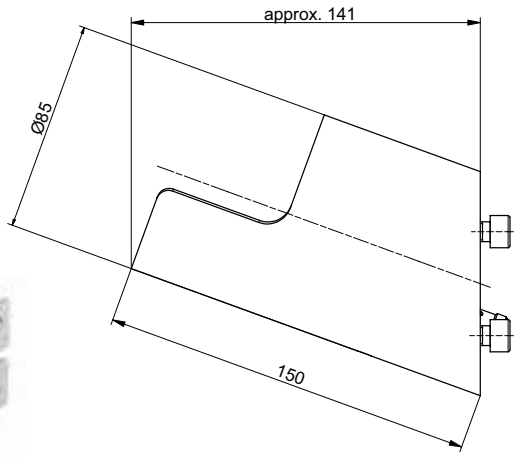

mounting bracket

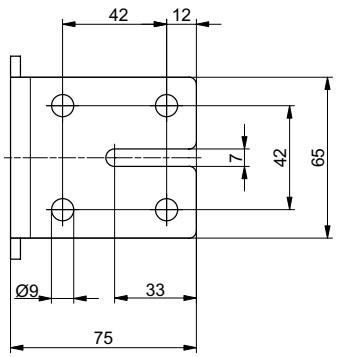

Part no.	Description
C1-190361	Dispenser mounting for TK20 H_2 (Including mounting bracket, installable in three different designs)

Classic dispenser mounting for fueling nozzles

With magnetic field sensor and 2 m cable, explosion-proof according to ATEX

approx. dimensions (mm)



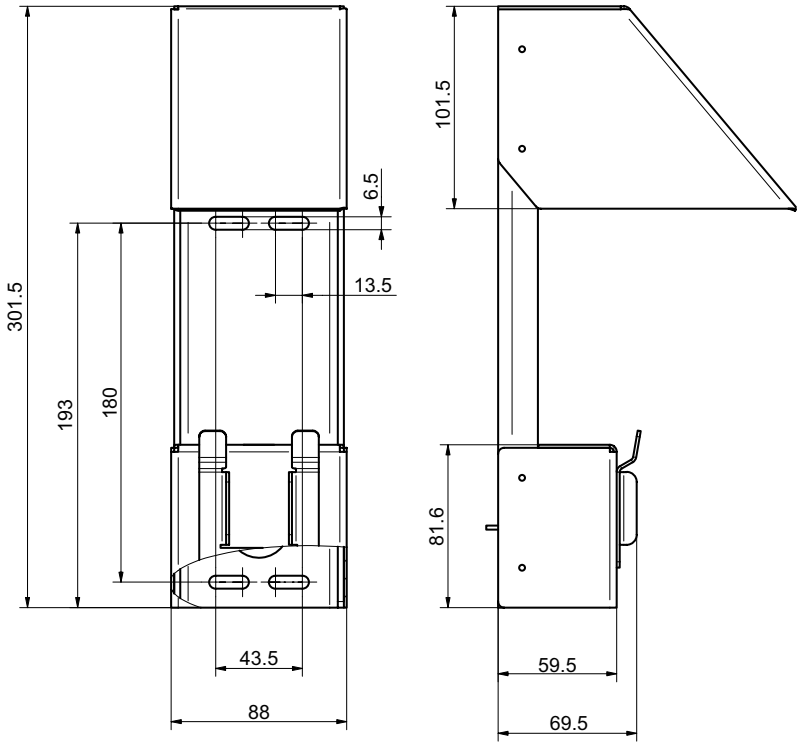

Part No.	Description
C1-191367	Dispenser mounting for TK20 H_2

Service receptacle WEH® TNS1 H_2

To prevent damage in the fueling nozzle while leak testing during maintenance in the course of which pressure is applied, we recommend the use of a service receptacle. The receptacle also protects the fueling nozzle from dirt ingress whilst not in use.



Part no.	Description	Pressure (MAWP)
C1-148079	TNS1 H_2 Service receptacle incl. protection cap	87,5 MPa

WEH® Breakaway coupling

The suitable TSA30 H_2 70 MPa breakaway coupling, please see page 26.

Spare Parts

Various parts are available as spares for the WEH® TK20-S1 H_2 70 MPa Fueling nozzle.

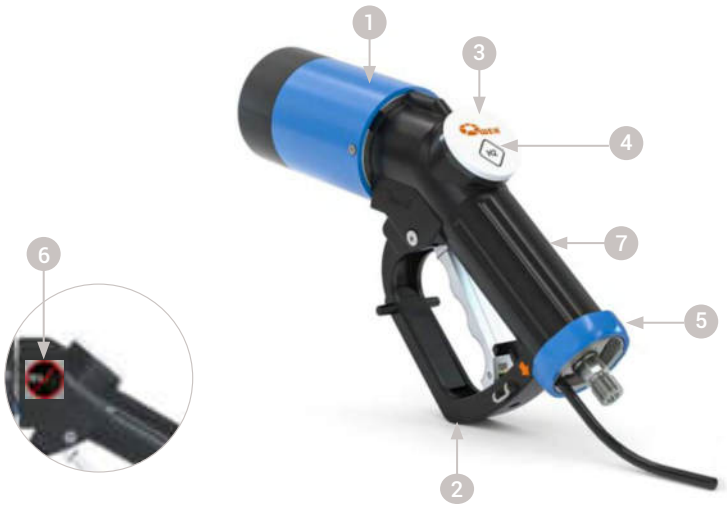

Position	Part No.	Description
1	C1-189534	Impact protection sleeve (incl. screws)
2	C1-189537	Hand grip (incl. locking lever, clamp and screws)
3	C1-161748	Logo cap
4	C1-59738	Logo plate
5	C1-186082	Clamping nut for protective hose
6	C1-157491	Label
7	C1-189538	Handle protector (incl. screws)
	On request	Maintance spray

When ordering please specify the part no. engraved on the fueling nozzle.

Breakaway Coupling

TSA30-S1- H_2 70 MPa

Description

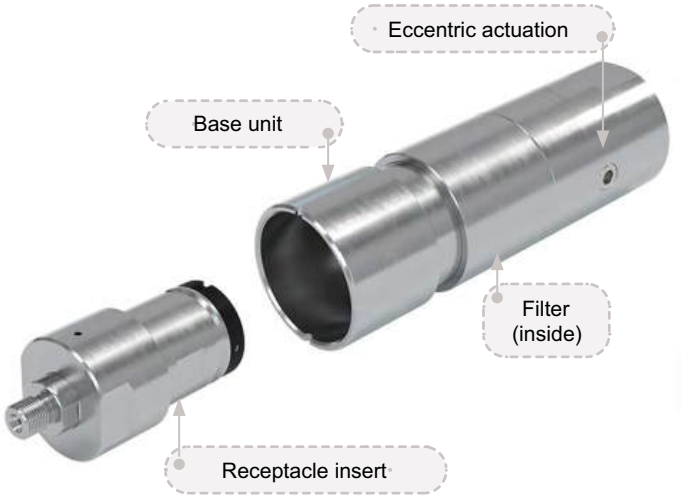

Features
- Enhanced safety → operating pressure up to max. 96.25 MPa
- Integrated filter (5 µm) → for clean filtered hydrogen
- Short and compact design
- Enhanced breakaway force acc. to ISO 19880-3
- Base unit can be reused after breakaway → no factory servicing necessary
- Receptacle insert available as a spare part → no downtime after a breakaway
- Easy installation directly on the dispenser

new

More safety at hydrogen fueling stations with the new WEH® TSA30-S1 H_2 70 MPa Breakaway coupling.
The breakaway coupling is installed directly on the dispenser. In the event of unexpected tensile forces, such as a vehicle driving away with a connected fueling nozzle, the TSA30-S1 H_2 70 MPa separates the connection between the dispenser and hose in a controlled manner. Both sides are sealed pressure-tight directly after breakaway and therefore damage to the vehicle and the dispenser can be prevented as far as possible.

The max. operating pressure of 96.25 MPa offers even more safety. If there is a malfunction, the safety valve of the dispenser opens at a pressure of 96.25 MPa. This high pressure can also reach the breakaway coupling, but the TSA30-S1 H_2 70 MPa can withstand this pressure perfectly.

In the event of a breakaway, the base unit can be reused - no factory servicing is necessary. Only the receptacle insert needs to be replaced or serviced. Therefore we offer a replacement receptacle insert, to avoid downtime at the dispenser.
The WEH® Breakaway coupling consists of a base unit and a receptacle insert. The integrated filter ensures clean filtered hydrogen and thus prevents damage caused by dirt ingress.
The TSA30-S1 H_2 70 MPa is suitable for use with pre-cooled hydrogen.

Application
Breakaway coupling for hydrogen fueling stations for direct installation at the dispenser.

Technical data

Characteristics	Basic version
Nominal Pressure	PN = 70 MPa
Max. allowable operating Pressure	MAWP = 96.25 MPa according to ISO 19880-1 (PS = 962.5 bar)
Media temperature range	−40 °C up to +85 °C
Ambient temperature range	−40 °C up to +85 °C
Breakaway force	220 – 1.000 N
Material	Corrosion resistant stainless steel
Sealing material	Hydrogen resistant
Design	With filter (5 µm)
Conformity / Tests / Approvals	Design validation based on ISO 19880-3

Other designs on request

Ordering - WEH® TSA30-S1 H_2 70 MPa Breakaway coupling

approx. dimensions (mm)

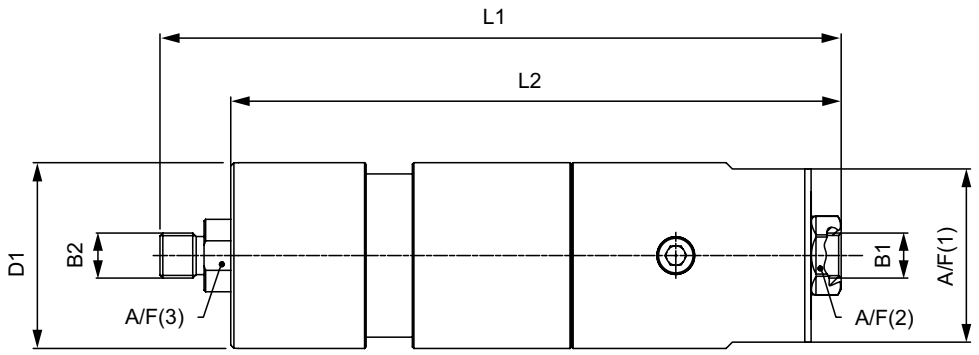

Part No.	Description	TNW	Pressure (MAWP)	B1 (female thread)	B2 (male thread)	L1	L2	D1	A/F (1)	A/F (2)	A/F (3)
C1-163690	TSA30-S1H_2 70MPa	3,5mm	96.25 MPa	UNF 9/16"–18 *	UNF 9/16"–18 **	216	194	59	55	22	21

* MP-fitting, 60° inner cone
** 60° inner cone

Accessories

The following accessories are available for the WEH® TSA30-S1 H_2 70 MPa Breakaway coupling:

Dispenser mounting

Mounting for safe attachment of the breakaway coupling to the dispenser. An integrated guide ring in the mounting ensures a straight breakaway force.

approx. dimensions (mm)

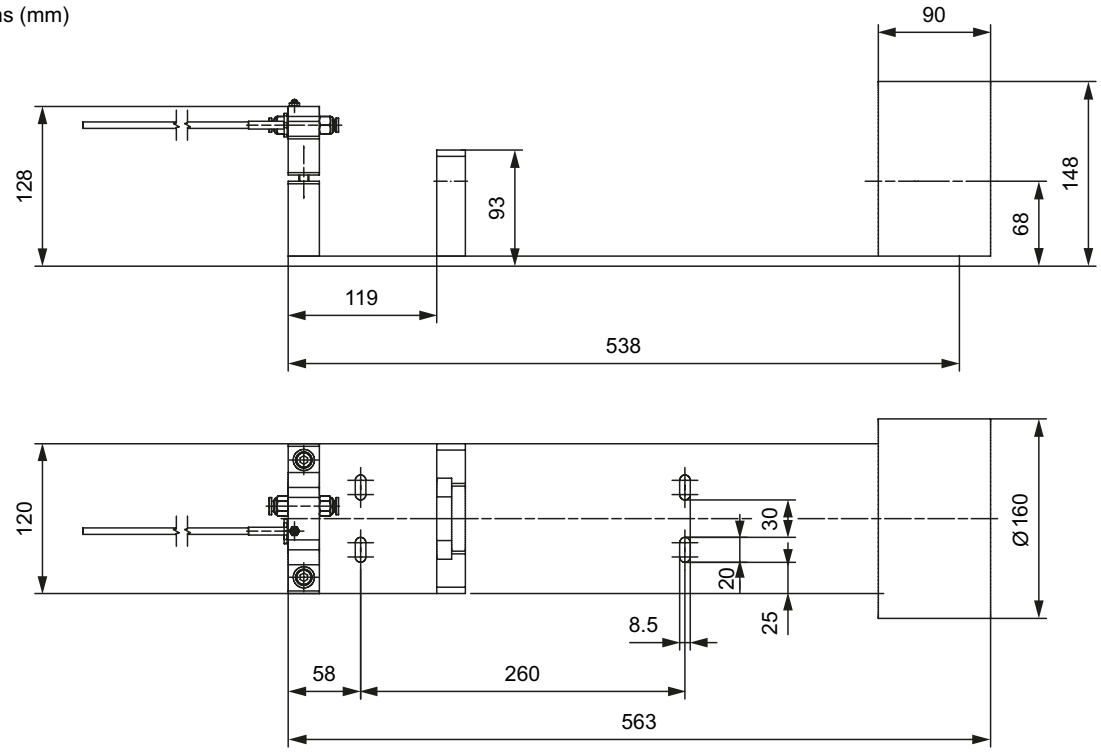

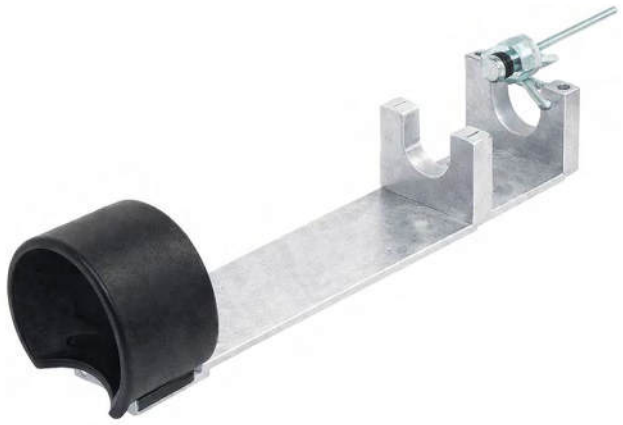

Part no.	Description
C1-183156	Dispenser mounting for TSA30-S1 H_2 70 MPa incl. data cable

Hoses

Suitable hoses for the TSA30-S1 H_2 70 MPa breakaway coupling are available on request.

Spare Parts

Various parts are available as spares for the WEH® TSA30-S1 H_2 70 MPa Breakaway coupling.

Part No.	Description
C1-168931	Receptacle insert for TSA30-S1 H_2 70 MPa

Description

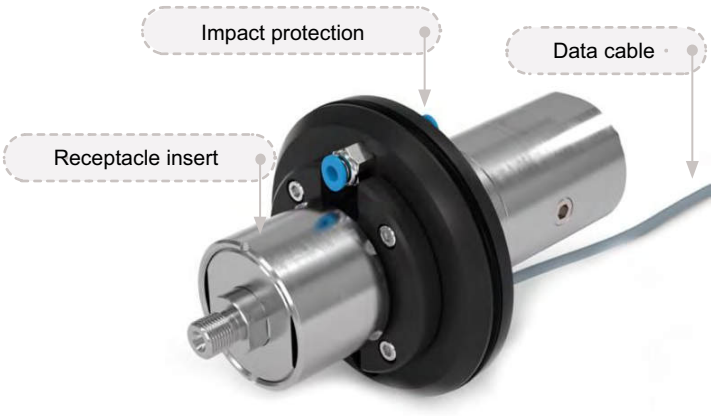

Features
- Higher safety → operating pressure up to máx. 96,25 MPa
- Integrated filter (5 µm) → for clean filtered hydrogen
- Short and compact design
- Increased breakaway force in accordance with ISO 19880-3
- Base unit can be reused after demolition → no factory servicing necessary
- Receptacle insert available as a spare part → no downtime after a tear-off
- Easy assembly within the hose set guarantees axial force transmission without additional support

More safety at hydrogen fueling stations with the new WEH® TSA31-S1 H_2 70 MPa breakaway coupling.
The breakaway coupling is installed directly between the filling hose to the fueling nozzle and the filling hose to the filling station. If unexpected tensile forces occur, e.g. when a vehicle with a connected fueling nozzle drives away, the TSA31-S1 H_2 70 MPa disconnects the connection between the dispenser and hose in a controlled manner. Both sides are sealed pressure-tight directly after breakaway and therefore damage to the vehicle and the dispenser can be prevented as far as possible.

The max. operating pressure of 96.25 MPa offers even more safety. If there is a malfunction, the safety valve of the dispenser opens at a pressure of 96.25 MPa. This high pressure can also reach the breakaway coupling, but the TSA31-S1 H_2 70 MPa can withstand this pressure perfectly.

In the event of a breakaway, the base unit can be reused - no factory servicing is necessary. Only the receptacle insert needs to be replaced or serviced. Therefore we offer a replacement receptacle insert, to avoid downtime at the dispenser.

The WEH® breakaway coupling consists of the base unit, the receptacle insert and a holding flange, which contains the plug-in couplings for the data cable and purging cable. The integrated filter ensures clean filtered hydrogen and thus prevents damage caused by dirt ingress. The TSA31-S1 H_2 70 MPa is suitable for use with pre-cooled hydrogen.

Application
Breakaway coupling for hydrogen filling stations for installation between two filling hoses.

Dados técnicos

Características	Versão básica
Pressão nominal	PN = 70 MPa
Pressão máx. admissível	(MAWP) 96,25 MPa conforme ISO 19880-1
Faixa de temperatura do fluido	−40 °C a +85 °C
Faixa de temperatura ambiente	−40 °C a +85 °C
Força de desacoplamento	220 – 1.000 N
Material	Aço inoxidável resistente à corrosão
Material de vedação	Resistente ao hidrogênio
Projeto	Com filtro (5 µm)
Conformidade / Ensaios	Validação de projeto conforme ISO 19880-3

Outras versões sob consulta.

Ordering - WEH® TSA31-S1 H_2 70 MPa Breakaway coupling

approx. dimensions (mm)

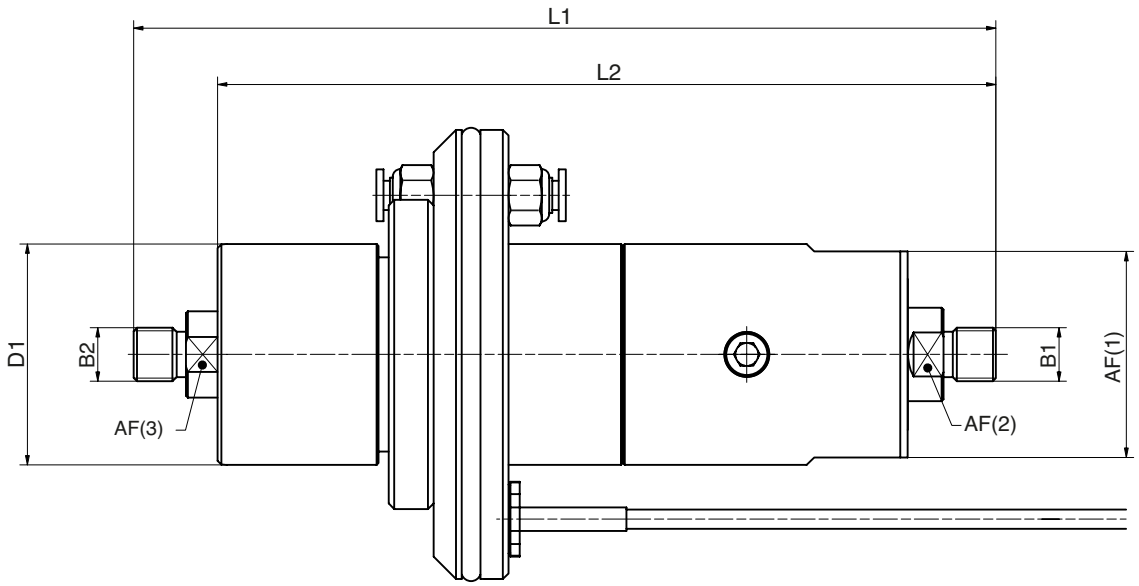

Part No.	Description	DN	Pressure (MAWP)	B1 (male thread)	B2 (male thread)	L1	L2	D1	D2	A/F (1)	A/F (2)	A/F (3)
C1-188029	TSA31-S1H_2 70MPa	3,5mm	96.25 MPa	UNF 9/16"–18 *	UNF 9/16"–18 *	320	207	59	120	55	22	21

* 60° inner cone, type M

Accessories

The following accessories are available for the WEH® TSA31-S1 H_2 70 MPa breakaway coupling:

Hose set between dispenser and breakaway coupling:

Part No.	Description	Hose length
C1-112185	Pressure hose H_2 70 MPa	0,5m

Hose set from the breakaway coupling to the fueling nozzle:

Part No.	Description	Hose length
C1-167804	Hose set H_2 70 MPa	2,5m
C1-189699	Hose set H_2 70 MPa	3,5m
C1-189702	Hose set H_2 70 MPa	4,5m

Spare parts

Various parts are available as spares for the WEH® TSA31-S1 H_2 70 MPa breakaway coupling.

Part No.	Description
C1-168931	Receptacle insert for TSA31-S1 H_2 70 MPa

Receptacle

TN9-S1- H_2 70 MPa

Description



Features
- High flow rate of up to 90 g/s for fast refueling
- 10-µm metal wire mesh filter, customizable
- Certified according to ISO 17268:2020 for maximum safety
- Low-noise refueling thanks to optimized inner shape
- Seal-friendly design: Robust, durable and easy to maintain
- Coding for pressure range / gas type (acc. to table below)

The WEH® TN9-S1 H_2 70 MPa receptacle was specially developed for refueling vehicles with hydrogen in the 700 bar pressure range.

The aerodynamically optimized inner shape of the receptacle ensures a virtually silent filling process and guarantees a maximum flow rate of up to 90 g/s. The seal-friendly design effectively protects internal seals from damage and ensures a long service life.

Thanks to its robustness and minimal maintenance requirements, the TN9-S1 H_2 70 MPa is particularly reliable and helps to reduce downtimes. It is also equipped with an integrated check valve and offers maximum safety and compatibility in accordance with ISO 17268:2020 thanks to the coding for pressure stage/gas type.

More safety thanks to integrated self-cleaning particle filter
The integrated filter cartridge with a pore size of 10µm, custom-made for the TN9, offers reliable protection against dirt particles and impurities. Its multi-layer wire mesh enables outstanding filter performance by effectively removing even long fibers and the smallest particles.This filter not only prevents leaks at the receptacle, but also ensures that operation remains safe and reliable even under difficult environmental conditions. The filter can also be flexibly adapted to different degrees of purity to meet your specific requirements.

TK H_2 (Except TK25 H_2)

TN9-S1 H_2 70 MPa	25 MPa	35 MPa	35 MPa MF*	35 MPa HF**	70 MPa
70 MPa	✓	✓			✓

*MF = Medium-Flow acc. to ISO 17268-1:2025
** HF = High-Flow acc. to ISO 17268:2012

Application
Receptacle for hydrogen refueling / filling of trucks, buses, vans, cars and for industrial applications suitable for the WEH® fueling nozzle according to the table below.

Technical data

Characteristics	Basic version
Technical nominal size (TNW)	4mm
Nominal pressure	PN = 70 MPa
Max. allowable operating pressure	MOP 87,5 MPa (PS = 875 bar)
Temperature range	−40 °C up to +85 °C
Material	Corrosion resistant
Sealing material	Hydrogen resistant
Design	With protection cap, integrated particle filter and integrated check valve
Coding	H70 Grade D according to ISO 17268-1:2025
Conformity / Tests / Approvals	Certified according to ISO 17268:2020

Other designs on request

Ordering - WEH® TN9-S1 H_2 70 MPa Receptacle with male thread

approx. dimensions (mm)



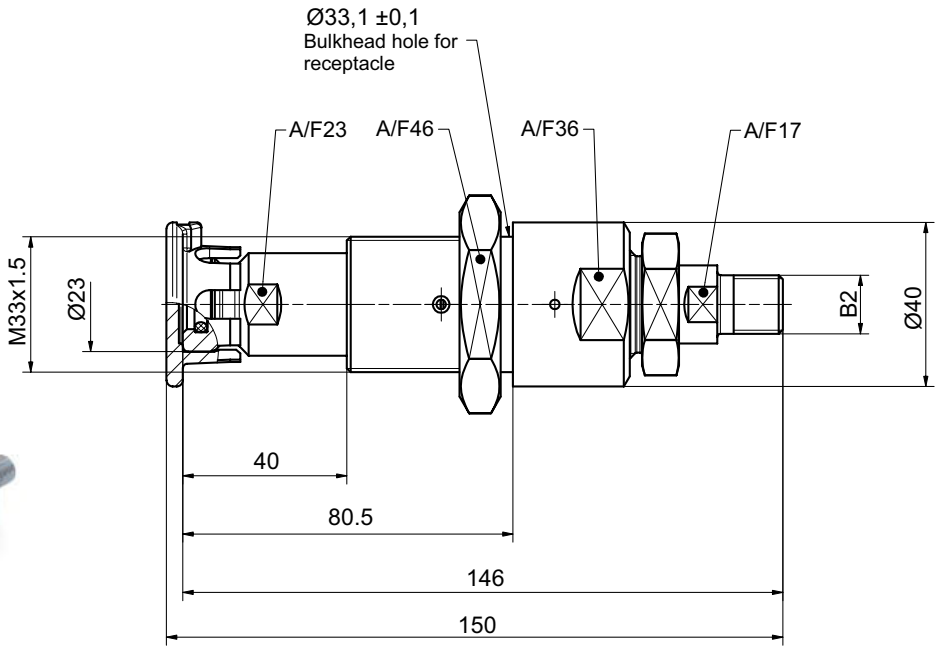

Part No.	Description	Mesh size filter	Pressure (MOP)	B2 (male thread)
C1-185258	TN9-S1H_2 70 MPa	10 µm	87.5 MPa	UNF 9/16"–18 *

* Connection geometry: MP fitting, 60° internal cone

Ordering - WEH® TN9-S1 H_2 70 MPa Receptacle with female thread

approx. dimensions (mm)



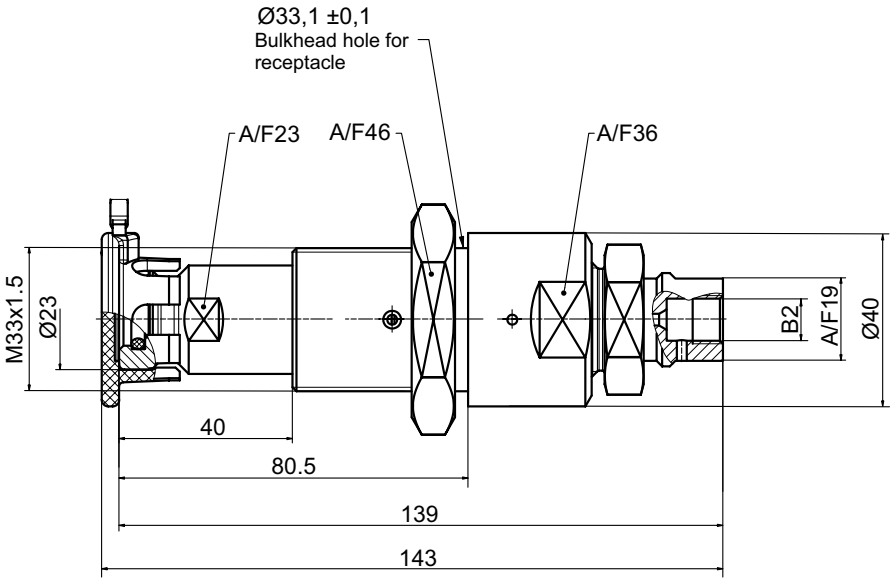

Part No.	Description	Mesh size filter	Pressure (MOP)	B2 (female thread)
C1-188769	TN9-S1H_2 70 MPa	10 µm	87.5 MPa	UNF 7/16“-20*

* Connection geometry: MP fitting, 60° internal cone

Ordering - WEH® TN9-S1 H_2 70 MPa Receptacle with male thread

approx. dimensions (mm)



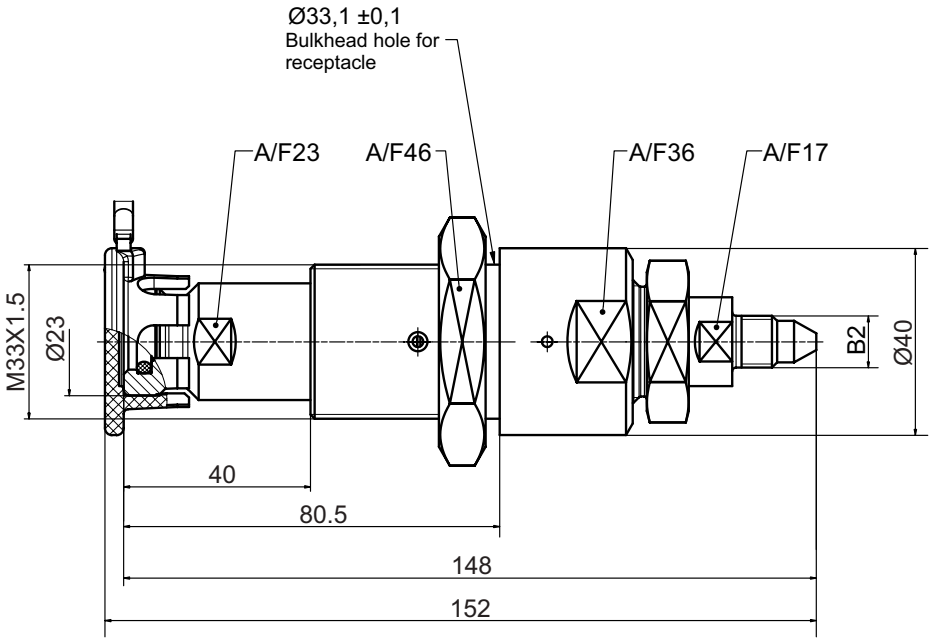

Part No.	Description	Mesh size filter	Pressure (MOP)	B2 (male thread)
C1-188771	TN9-S1H_2 70 MPa	10 µm	87.5 MPa	UNF 7/16“-20*

* Connection geometry: MP fitting, 59° internal cone
Other connections (e.g. O-Lok Face Seal or VOSSLok[40] or ISO 18418) on request.

Accessories

The following accessories are available for the WEH® TN9-S1 H_2 70 MPa Receptacle:
Infrared data interface incl. holder for TN9

Application example:





Part No.	Description
C1-188500	Infrared data interface incl. holder for TN9 (Input signal RS485, output signal J2799 Infrared)
C1-188941	Mounting nut (for IR interface)

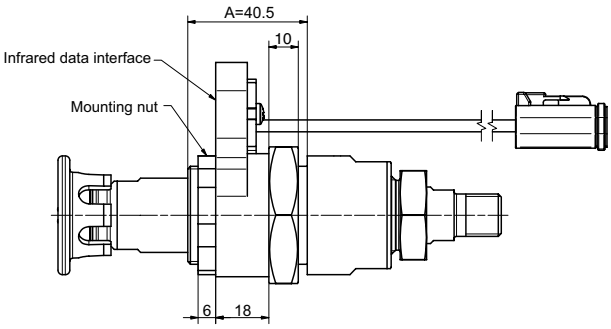

Note: The WEH® receptacle is designed to accommodate an attached data interface in area “A.”
When installing the WEH® receptacle, ensure that the permissible installation space A of 40.5 mm is not exceeded.

Take into account the sheet thickness, nut height, and data interface, including the mounting element.

When using data interface C1-188500 and mounting nut C1-188941, the sheet metal thickness must not exceed 6 mm.

Spare parts

Various parts are available as spares for the WEH® TN9-S1 H_2 70 MPa Receptacle.

Protection cap / Nut

Protection cap with a strap to protect the receptacle from dirt ingress.



Part No.	Description
W85984	Protection cap for receptacles
C1-185122	TN9-H70 Nut M33x1.5 for receptacle mounting

Check valve

TVR1- H_2 70 MPa

Description





Features
- Robust construction
- Low-noise opening and closing
- Corrosion resistant stainless steel
- High leak tightness

With the TVR1 H_2 70 MPa WEH offers a high-performance check valve for use in hydrogen cars or hydrogen fueling stations of the latest generation.
The WEH® TVR1 H_2 70 MPa check valves provide a reliable function wherever hydrogen should only flow in one direction within a pipe system and must be prevented from a return flow.

The seals in the valve are arranged to prevent them from being damaged by dirt particles in the gas flow. The WEH® TVR1 H_2 70 MPa Check valve is made of corrosion-resistant stainless steel achieving a very durable unit due to its robust internal structure

Application
Check valve for cars, also suitable for installation in hydrogen fueling stations.
The WEH® TVR1 H_2 70 MPa product family is offered as a return flow prevention acc. to DIN EN 736-1 for installation in H2 systems and pipelines.

Technical data

Characteristics	Basic version
Technical nominal size (TNW)	Depending on design
Nominal Pressure	PN = 70 MPa
Max. allowable operating Pressure	MAWP = 87.5 MPa according to ISO 17168 (PS = 875 bar)
Temperature range	−40 °C up to +85 °C
Material	Corrosion resistant stainless steel
Sealing material	Hydrogen resistant
Design	With or without integrated particle filter (20 µm)
Conformity / Tests / Approvals	e1 00 0009 (Regulation (CE) n.º 79/2009)

Other designs on request

Ordering - WEH® TVR1 H_2 70 MPa Check valve with male thread on both sides (Face Seal on both sides)

approx. dimensions (mm)



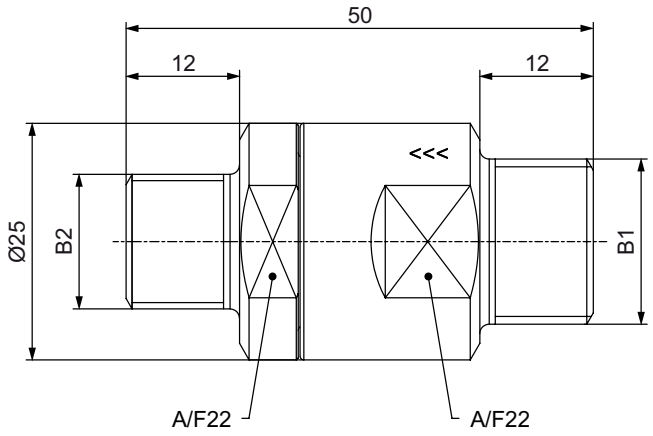

Part No.	Description	TNW	Pressure (MAWP)	B1 (male thread)	B2 (male thread)
C1-76959-X1	TVR1 H_2 70 MPa (EC79)	4mm	87.5 MPa	UN 11/16“-16 for sealing with O-Lok® Face Seal* for tube Ø 10 (3/8“)	UNF 9/16“-18 for sealing with O-Lok® Face Seal* for tube Ø 6 (1/4“)

* Face Seal acc. to SAE J1453

Ordering - WEH® TVR1 H_2 70 MPa Check valve with female thread / male thread and filter (20 µm)

approx. dimensions (mm)



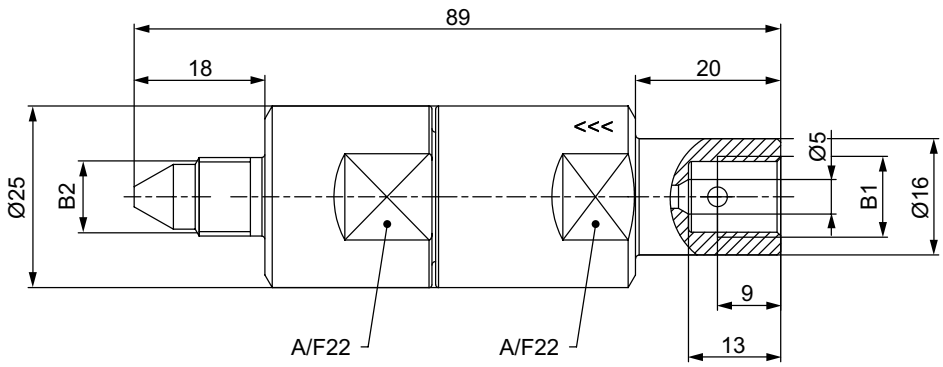

Part No.	Description	TNW	Pressure (MAWP)	B1 (female thread)	B2 (male thread)
C1-87743	TVR1 H_2 70 MPa (EC79)	2,5mm	87.5 MPa	UNF 7/16“-20*	UNF 7/16“-20**

* MP-fitting, 60° inner cone
** MP-fitting, 59° outer cone

Other connection sizes and types (e.g. Cone and Thread Fittings or VOSSLok[40]) on request.

TK20-S2 H_2 35 MPa ENR

Description



Features
- Type C nozzle acc. to SAE J2600 resp. ISO 17268
- Very high flow rate
- Easy operation / single-handed operation
- Max. allowable operating pressure 48.125 MPa (MAWP according to ISO 19880-1:2020)
- Exchangeable data interface (ENR)
- Integrated purging line for nitrogen flushing
- WEH® EASY-TURN 250° swivel joint
- Optimized impact protection to protect the data interface
- Plastic thermal protection
- Hand grip with magnet
- Compatible with pressure stage H35 according to ISO 17268-1:2025 (see table below)

The WEH® TK20-S2 H_2 35 MPa ENR Fueling nozzle with exchangeable data interface (ENR = exchangeable nozzle re ceiver) was developed for fast filling of cars with compressed, gaseous hydrogen (CGH2). Through to the larger nominal width, refueling with 90 g/s or higher is possible. In addition, this filling nozzle is designed for a maximum operating pressure of 48.125 MPa (= MAWP according to ISO 19880-1:2020).

In addition, the new TK20-S2 H_2 35 MPa ENR has the same tried and tested features as the already well-known TK17 H_2 70 MPa ENR.
The fueling nozzle is additionally equipped with a purging line that allows purging with nitrogen during and after refueling process. This can prevent ingress of moisture and the formation of ice crystals during filling with precooled hydrogen.

The WEH® TK20-S2 H_2 35 MPa ENR offers optimum safety for the operator thanks to the locking mechanism. The Fueling nozzle remains connected to the receptacle until the locking mechanism is released by the operator.

TN H_2 (Except TN5 H_2)

TK20-S2 H_2 35 MPa ENR	25 MPa	35 MPa	35 MPa MF*	35 MPa HF**	70 MPa
35 MPa		✓	✓	✓	✓

*MF = Medium-Flow acc. to ISO 17268-1:2025
** HF = HF = High-Flow acc. to ISO 17268:2012

Application
Fueling nozzle for hydrogen fast filling of cars at self-service fueling stations.

Technical data

Characteristics	Basic version
Purging line Outer / inner diameter	6/4 mm
Nominal Pressure	PN = 35 MPa
Max. Allowable Operating Pressure	MAWP = 48.125 MPa according to ISO 17268 (PS = 481.25 bar)
Medium*	Hydrogen
Media Temperature Range	-40 °C up to +85 °C
Ambient Temperature Range	-40 °C up to +85 °C
Material	Corrosion resistant
Sealing Material	Hydrogen resistant
Nozzle Type	Type C acc. to SAE J2600:2015 and previous resp. ISO 17268:2020 and previous
Coding	H35 according to ISO 17268-1:2025
Design	With plastic thermal protection / Optimized impact protection to protect the data interface / Exchangeable data interface acc. to SAE J2799 / Integrated purging line / Hand grip with magnet
Weight	Approx. 2.65 kg
Medium for Purging	Nitrogen or compresed air
Media Temperature Range Purging Medium	-40°C to +85°C (most effective >0°C)
Flow Rate During Purging	500 Nl/h at max. 12 bar purging pressure
Conformity / Tests / Approvals	IR data interface: SAE J2799 and ATEX, NEC, KTL, CCC Design validation based on ISO 17268-1:2025

* Suitable for pre-cooled hydrogen

Ordering - WEH® TK20-S2 H_2 35 MPa ENR Fueling nozzle

approx. dimensions (mm)

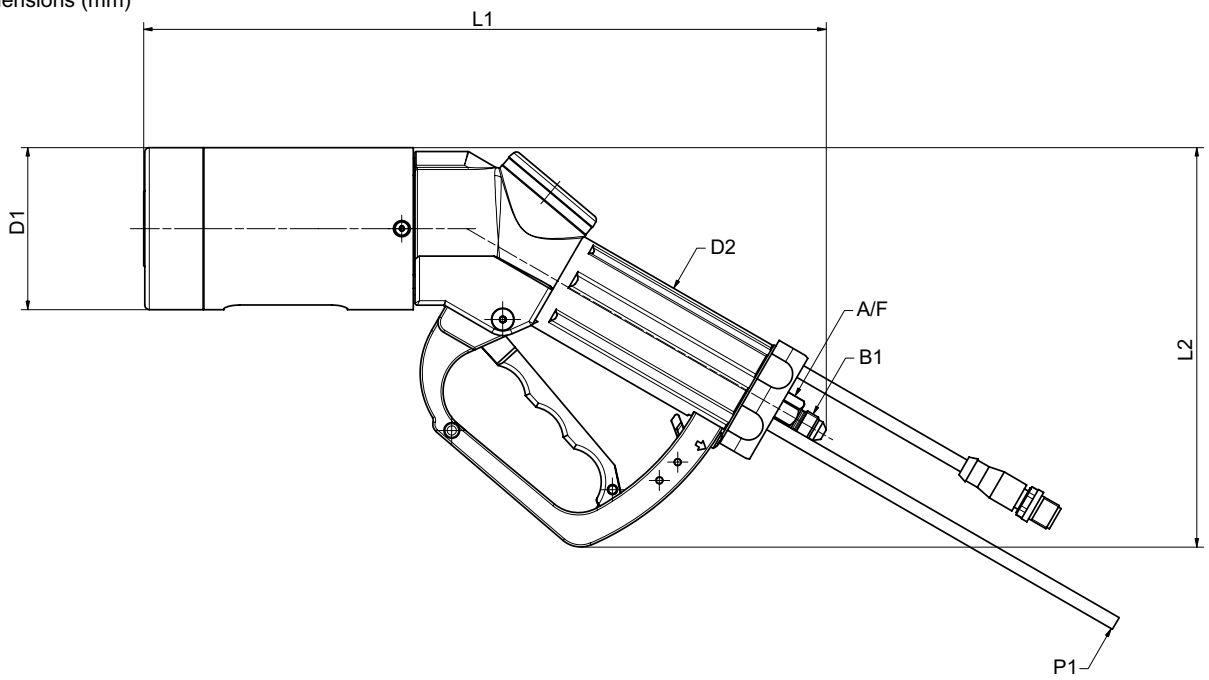

Part no.	Description	Pressure (MAWP)	B1 (male thread)	P1	L1	L2	D1	D2	A/F
C1-188780	TK20-S2H_2 35MPa ENR	48.125 MPa	UNF 7/16“-20*	6/4	289	178	72	46	15

* according to SAE J514 with 37° outer cone
Fueling assemblies consisting of fueling nozzle, hose set and breakaway coupling are available on request.

Accessories

The following accessories are available for the WEH® TK20-S2 H_2 35 MPa ENR Fueling nozzle:

Hose set

Hose set for connecting fueling nozzle and TSA1 H_2 breakaway coupling, complete with filling hose, data cable, purging line and braided protection hose as cover.
Design filling hose: max. operating pressure PS: 49 MPa / nominal bore fitting (TNW): 4.5 mm / media temperature range: -40 °C up to +85 °C



Part no.	B1/B2 (female thread)	P1 / P2	Hose length
E68-174299	UNF 7/16“-20*	Ø6	3 m
E68-174300	UNF 7/16“-20*	Ø6	4 m
E68-174301	UNF 7/16“-20*	Ø6	5 m

* according to SAE JIC, 37° sealing cone

Dispenser mounting

The fueling nozzle can also be used with a dispenser mounting, which is installed on the fuel dispenser.
Advanced dispenser mounting for fueling nozzles
With inductive sensor and M12x1 connector, explosion-proof according to ATEX

approx. dimensions (mm)

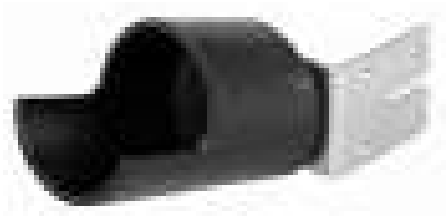

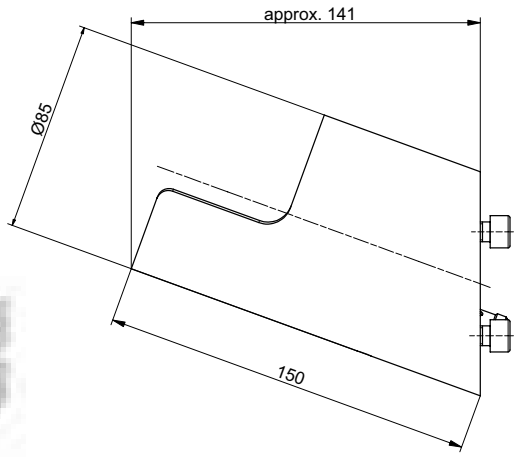

mounting bracket

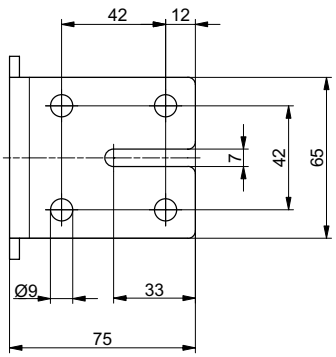

Part no.	Description
C1-190361	Dispenser mounting for TK20 H_2 (Including mounting bracket, installable in three different designs)

Classic dispenser mounting for fueling nozzles

With magnetic field sensor and 2 m cable, explosion-proof according to ATEX

approx. dimensions (mm)



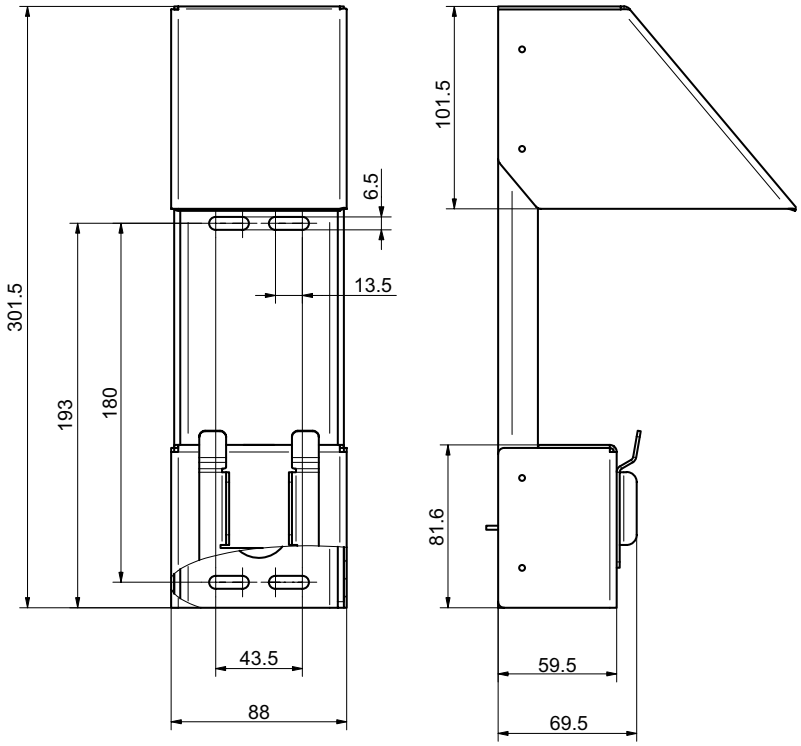

Part No.	Description
C1-191367	Dispenser mounting for TK20 H_2

WEH® TNS1 H_2 Service receptacle

To prevent damage in the fueling nozzle while leak testing during maintenance in the course of which pressure is applied, we recommend the use of a service receptacle. The receptacle also protects the fueling nozzle from dirt ingress whilst not in use.

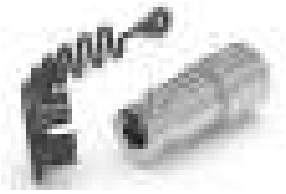

Part no.	Description
C1-148079	TNS1 H_2 Service receptacle incl. protection cap

WEH® Breakaway coupling

The suitable TSA1 H_2 breakaway coupling, please see page 80.

Data cable

Part no.	Description	Hose length
E68-96194	Data cable suitable for 4 m hose set	4,45m
E68-96193	Data cable for connecting with the converter	3,45m

Other lengths on request

Spare parts

Various parts are available as spares for the WEH® TK20-S2 H_2 35 MPa ENR Fueling nozzle.



Position	Part No.	Description
1	C1-189533	Impact protection sleeve (incl. screws)
2	C1-189535	IR data interface ATEX, NEC, KTL, CCC (incl. O-ring and screws)
3	C1-189537	Hand grip (incl. locking lever, clamp and screws)
4	C1-161748	Logo cap
5	C1-59738	Logo plate
6	C1-186082	Clamping nut for protective hose
7	C1-157491	Label
8	C1-189538	Handle protector (incl. screws)
	Sob consulta	Maintance spray

When ordering please specify the part no. engraved on the fueling nozzle.

Description



Features
- Type C nozzle acc. to SAE J2600 resp. ISO 17268
- Very high flow rate
- Easy operation / single-handed operation
- Max. allowable operating pressure 48.125 MPa (MAWP according to ISO 19880-1:2020)
- Integrated purging line for nitrogen flushing
- WEH® EASY-TURN 250° swivel joint
- Optimized impact protection Plastic thermal protection
- Hand grip with magnet
- Compatible with pressure stage H35 according to ISO 17268-1:2025 (see table below)

The WEH® TK20-S2 H_2 35 MPa Fueling nozzle was developed for fast filling of cars with compressed, gaseous hydrogen (CGH2). Through to the larger nominal width, refueling with 90 g/s or higher is possible. In addition, this filling nozzle is designed for a maximum operating pressure of 48.125 MPa (= MAWP according to ISO 19880-1:2020).

In addition, the new TK20-S2 H_2 35 MPa has the same tried and tested features as the already well-known TK17 H2 70 MPa.
The fueling nozzle is additionally equipped with a purging line that allows purging with nitrogen during and after refueling process. This can prevent ingress of moisture and the formation of ice crystals during filling with precooled hydrogen.

The WEH® TK20-S2 H_2 35 MPa offers optimum safety for the operator thanks to the locking mechanism. The Fueling nozzle remains connected to the receptacle until the locking mechanism is released by the operator.

TN H_2 (Except TN5 H_2)

TK20-S2 H_2 35 MPa	25 MPa	35 MPa	35 MPa MF*	35 MPa HF**	70 MPa
35 MPa		✓	✓	✓	✓

MF* = Medium-Flow acc. to ISO 17268-1:2025
** HF = High-Flow acc. to ISO 17268:2012

Application
Fueling nozzle for hydrogen fast filling of cars at self-service fueling stations.

Technical data

Characteristics	Basic version
Purging line Outer / inner diameter	6/4 mm
Nominal Pressure	PN = 35 MPa
Max. Allowable Operating Pressure	MAWP = 48.125 MPa according to ISO 17268 (PS = 481.25 bar)
Medium*	Hydrogen
Media Temperature Range	-40 °C up to +85 °C
Ambient Temperature Range	-40 °C up to +85 °C
Material	Corrosion resistant
Sealing Material	Hydrogen resistant
Nozzle Type	Type C acc. to SAE J2600:2015 and previous resp. ISO 17268:2020 and previous
Coding	H35 according to ISO 17268-1:2025
Design	With plastic thermal protection / With plastic thermal protection Integrated purging line / Hand grip with magnet
Weight	Approx. 2.65 kg
Medium for Purging	Nitrogen or compressed air
Media Temperature Range Purging Medium	-40°C to +85°C (most effective >0°C)
Flow Rate During Purging	500 Nl/h at max. 12 bar purging pressure
Conformity / Tests / Approvals	Design validation based on ISO 17268-1:2025

* Suitable for pre-cooled hydrogen

Ordering - WEH® TK20-S2 H_2 35 MPa Fueling nozzle

approx. dimensions (mm)

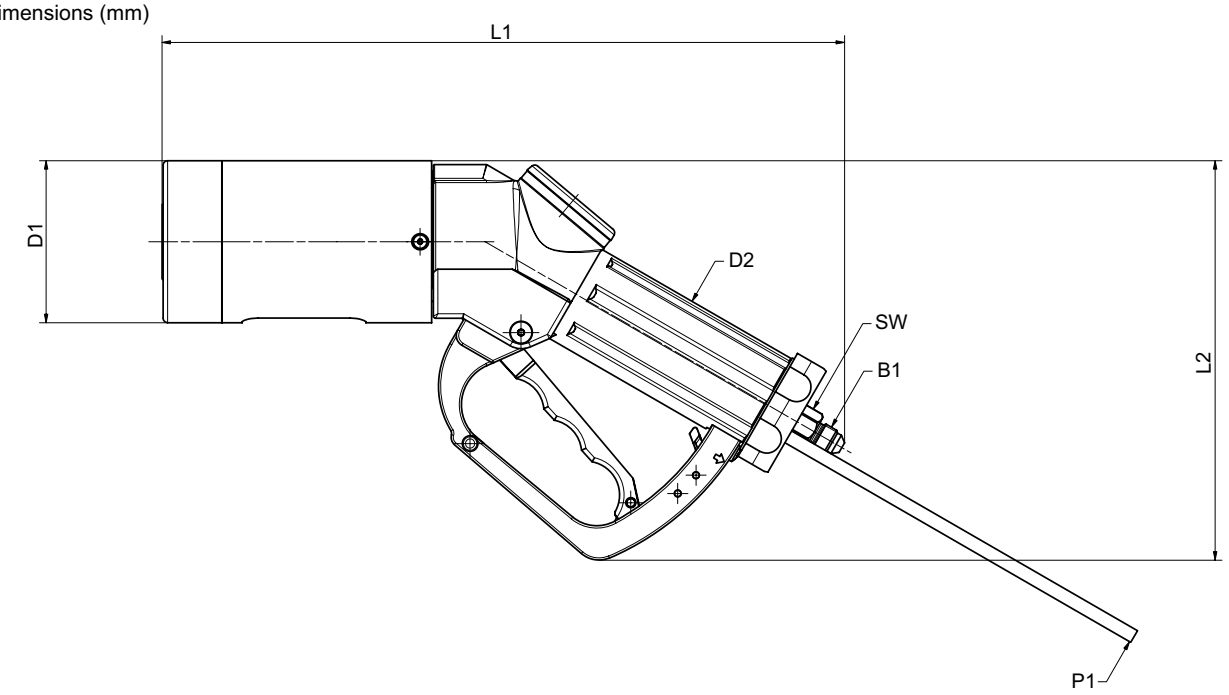

Part no.	Description	Pressure (MAWP)	B1 (male thread)	P1	L1	L2	D1	D2	A/F
C1-188783	TK20-S2H_2 35MPa	48.125 MPa	UNF 7/16“-20*	6/4	289	178	72	46	15

* according to SAE J514 with 37° outer cone
Fueling assemblies consisting of fueling nozzle, hose set and breakaway coupling are available on request.

Accessories

The following accessories are available for the WEH® TK20-S2 H_2 35 MPa Fueling nozzle:

Hose set

Hose set for connecting fueling nozzle and TSA1 H2 breakaway coupling, complete with illing hose, purging line and braided protection hose as cover.
Design filling hose: max. operating pressure PS: 49 MPa / nominal bore fitting (TNW): 4.5 mm / media temperature range: -40 °C up to +85 °C



Part no.	B1/B2 (female thread)	P1 / P2	Hose length
C1-189989	UNF 7/16“-20*	Ø6	3 m
C1-189990	UNF 7/16“-20*	Ø6	4 m
C1-189991	UNF 7/16“-20*	Ø6	5 m

* according to SAE JIC, 37° sealing cone

Dispenser mounting

The fueling nozzle can also be used with a dispenser mounting, which is installed on the fuel dispenser.
Advanced dispenser mounting for fueling nozzles
With inductive sensor and M12x1 connector, explosion-proof according to ATEX

approx. dimensions (mm)

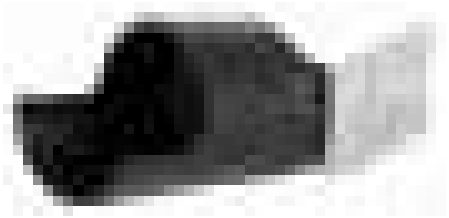

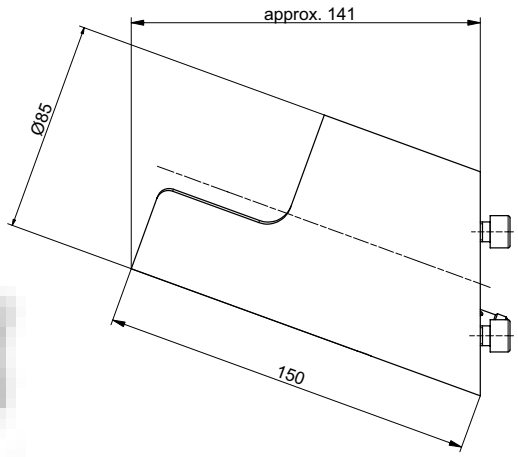

mounting bracket

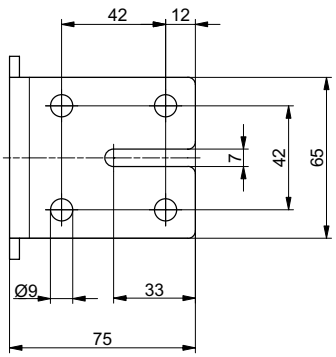

Part no.	Description
C1-190361	Dispenser mounting for TK20 H_2 (Including mounting bracket, installable in three different designs)

Classic dispenser mounting for fueling nozzles

With magnetic field sensor and 2 m cable, explosion-proof according to ATEX

approx. dimensions (mm)

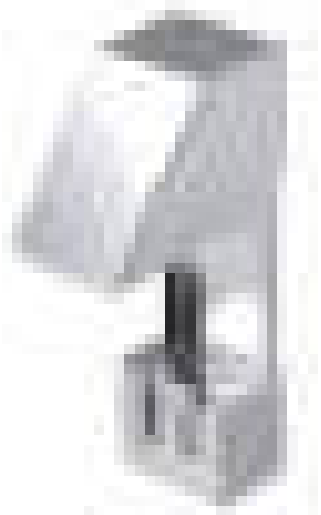

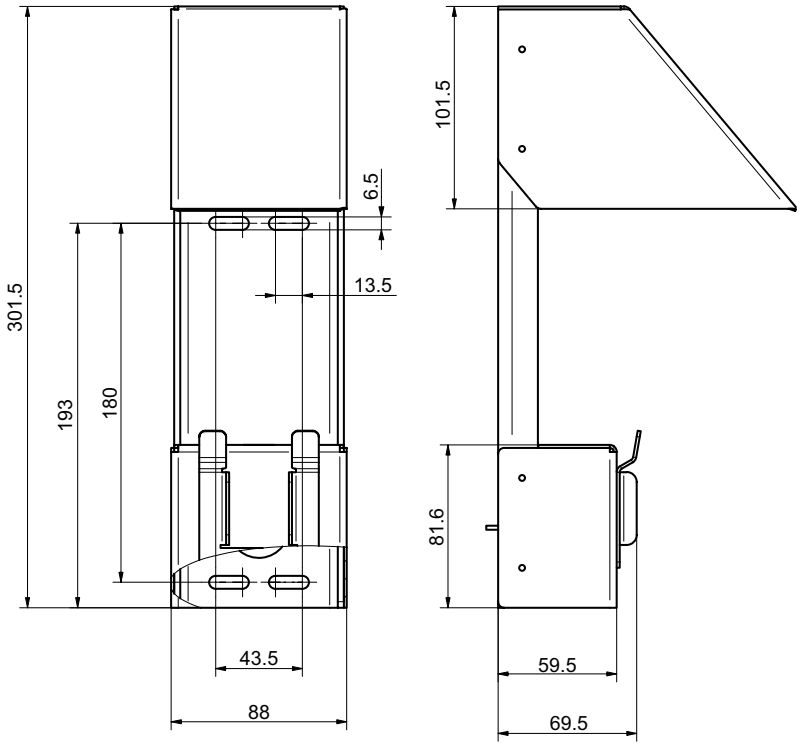

Part No.	Description
C1-191367	Dispenser mounting for TK20 H_2

WEH® TNS1 H_2 Service receptacle

To prevent damage in the fueling nozzle while leak testing during maintenance in the course of which pressure is applied, we recommend the use of a service receptacle. The receptacle also protects the fueling nozzle from dirt ingress whilst not in use.

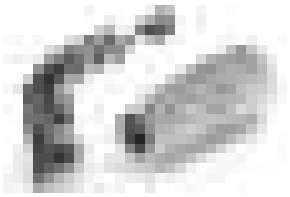

Part no.	Description
C1-148079	TNS1 H_2 Service receptacle incl. protection cap

WEH® Breakaway coupling

The suitable TSA1 H_2 breakaway coupling, please see page 80.

Spare parts

Various parts are available as spares for the WEH® TK20-S2 H_2 35 MPa Fueling nozzle.



Position	Part No.	Description
1	C1-189533	Impact protection sleeve (incl. screws)
2	C1-189537	Hand grip (incl. locking lever, clamp and screws)
3	C1-161748	Logo cap
4	C1-59738	Logo plate
5	C1-186082	Clamping nut for protective hose
6	C1-157491	Label
7	C1-189538	Handle protector (incl. screws)
	Sob consulta	Maintance spray

When ordering please specify the part no. engraved on the fueling nozzle.

TK20-S3 H_2 35 MPa ENR Medium Flow

Description



Features
- Type C nozzle acc. to SAE J2600 resp. ISO 17268
- Very high flow rate
- Easy operation / single-handed operation
- Max. allowable operating pressure 48.125 MPa (MAWP according to ISO 19880-1:2020)
- Exchangeable data interface (ENR)
- Integrated purging line for nitrogen flushing
- WEH® EASY-TURN 250° swivel joint
- Optimized impact protection to protect the data interface
- Plastic thermal protection
- Hand grip with magnet
- Compatible with pressure stage H35 Medium-Flow according to ISO 17268-1:2025 (see table below)

The WEH® TK20-S3 H_2 35 MPa ENR Medium-Flow Fueling nozzle with exchangeable data interface (ENR = exchangeable nozzle receiver) was developed for fast filling of cars with compressed, gaseous hydrogen (CGH2). Through to the larger nominal width, refueling with 120 g/s or higher is possible. In addition, this filling nozzle is designed for a maximum operating pressure of 48.125 MPa (= MAWP according to ISO 19880-1:2020).

The fueling nozzle is additionally equipped with a purging line that allows purging with nitrogen during and after refueling process. This can prevent ingress of moisture and the formation of ice crystals during filling with precooled hydrogen.

The WEH® TK20-S3 H_2 35 MPa ENR Medium-Flow offers optimum safety for the ope rator thanks to the locking mechanism. The Fueling nozzle remains connected to the receptacle until the locking mechanism is released by the operator.

TN H_2 (Except TN5 H_2)

TK20-S3 H_2 35MPa ENR Medium-Flow	25 MPa	35 MPa	35 MPa MF*	35 MPa HF**	70 MPa
35 MPa			✓	✓	

*MF = Medium-Flow acc. to ISO 17268-1:2025
** HF = High-Flow acc. to ISO 17268:2012

Application
Fueling nozzle for rapid filling of buses and trucks with hydrogen in self-service operation.

Technical data

Characteristics	Basic version
Purging line Outer / inner diameter	6/4 mm
Nominal Pressure	PN = 35 MPa
Max. Allowable Operating Pressure	MAWP = 48.125 MPa according to ISO 17268 (PS = 481.25 bar)
Medium*	Hydrogen
Media Temperature Range	-40 °C up to +85 °C
Ambient Temperature Range	-40 °C up to +85 °C
Material	Corrosion resistant
Sealing Material	Hydrogen resistant
Nozzle Type	Type C acc. to SAE J2600:2015 and previous resp. ISO 17268:2020 and previous
Coding	H35MF according to ISO 17268-1:2025
Projeto	With plastic thermal protection / Optimized impact protection to protect the data interface / Exchangeable data interface acc. to SAE J2799 / Integrated purging line / Hand grip with magnet
Weight	Approx. 2.65 kg
Medium for Purging	Nitrogen or compressed air
Media Temperature Range Purging Medium	-40 °C to +85 °C (most effective >0 °C)
Flow Rate During Purging	500 Nl/h at max. 12 bar purging pressure
Conformity / Tests / Approvals	IR data interface: SAE J2799 and ATEX, NEC, KTL, CCC Design validation based on ISO 17268-1:2025

* Suitable for pre-cooled hydrogen

Ordering - WEH® TK20-S3 H_2 35 MPa ENR Medium-Flow Fueling nozzle

approx. dimensions (mm)

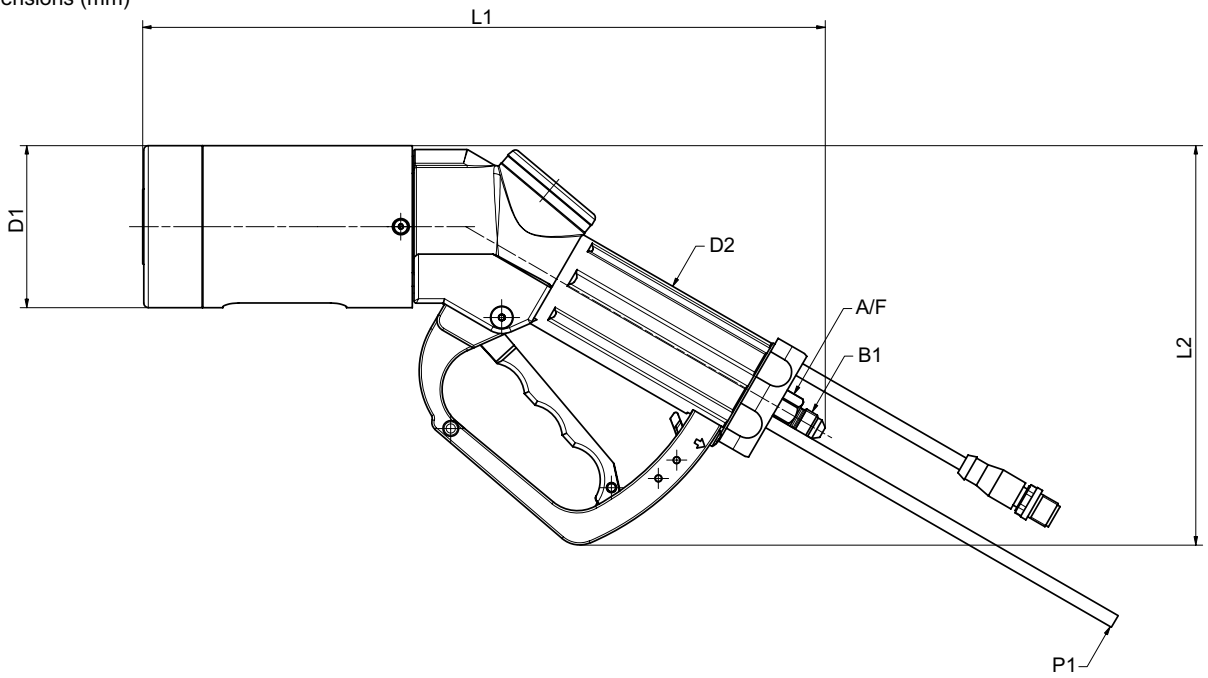

Part no.	Description	Pressure (MAWP)	B1 (male thread)	P1	L1	L2	D1	D2	A/F
C1-188781	TK20-S3H_2 35MPa ENR Medium-Flow	48.125 MPa	UNF 7/16“-20*	6/4	304	178	72	46	15

* according to SAE J514 with 37° outer cone
Fueling assemblies consisting of fueling nozzle, hose set and breakaway coupling are available on request.

Accessories

The following accessories are available for the WEH® TK20-S2 H_2 35 MPa ENR fueling nozzle:

Hose set

Hose set for connecting fueling nozzle and TSA1 H_2 breakaway coupling, complete with filling hose, data cable, purging line and braided protection hose as cover.

Design filling hose: max. operating pressure PS: 49 MPa / nominal bore fitting (TNW): 4.5 mm / media temperature range: -40 °C up to +85 °C



Part no.	B1/B2 (female thread)	P1 / P2	Hose length
E68-174299	UNF 7/16“-20*	Ø6	3 m
E68-174300	UNF 7/16“-20*	Ø6	4 m
E68-174301	UNF 7/16“-20*	Ø6	5 m

* according to SAE JIC, 37° sealing cone * according to SAE JIC, 37° sealing cone

Dispenser mounting

The fueling nozzle can also be used with a dispenser mounting, which is installed on the fuel dispenser.
Advanced dispenser mounting for fueling nozzles
With inductive sensor and M12x1 connector, explosion-proof according to ATEX

approx. dimensions (mm)

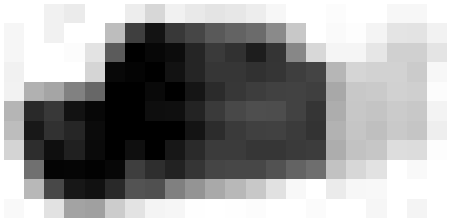

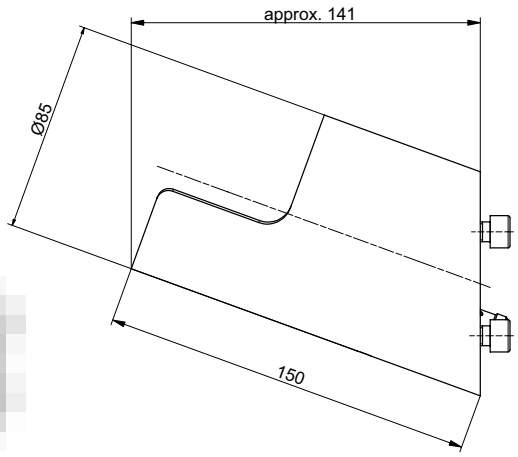

mounting bracket

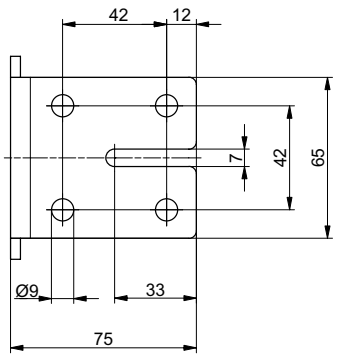

Part no.	Description
C1-190361	Dispenser mounting for TK20 H_2 (Including mounting bracket, installable in three different designs)

Classic dispenser mounting for fueling nozzles

With magnetic field sensor and 2 m cable, explosion-proof according to ATEX

approx. dimensions (mm)

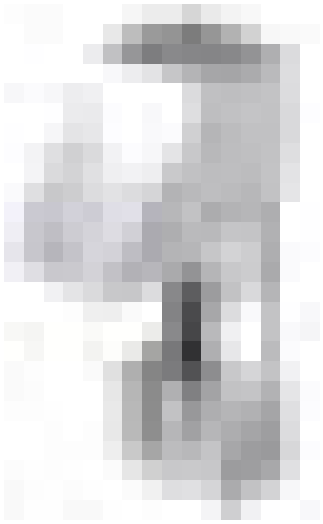

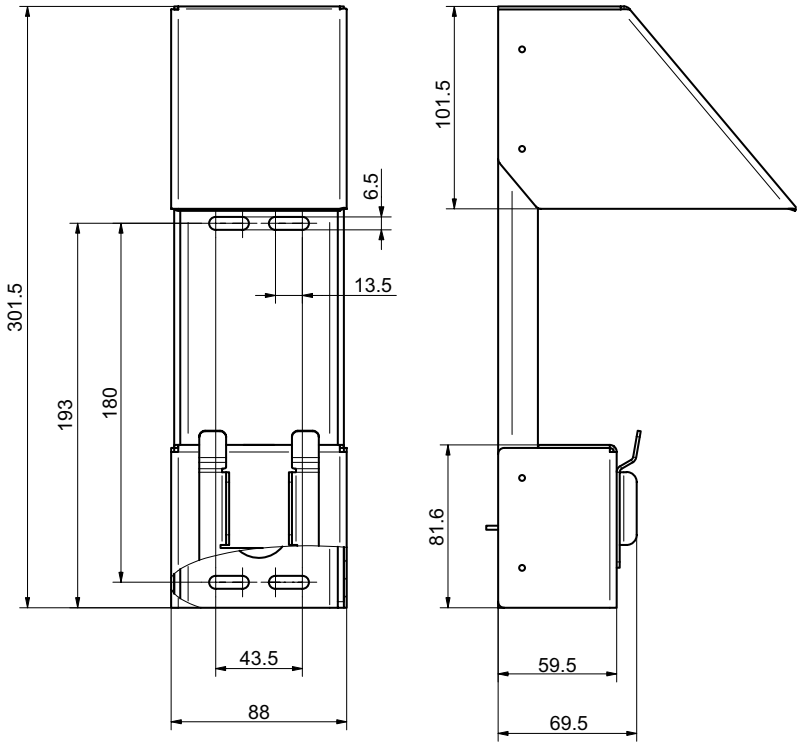

Part No.	Description
C1-191367	Dispenser mounting for TK20 H_2

WEH® TNS1 H_2 Service receptacle

To prevent damage in the fueling nozzle while leak testing during maintenance in the course of which pressure is applied, we recommend the use of a service receptacle. The receptacle also protects the fueling nozzle from dirt ingress whilst not in use.

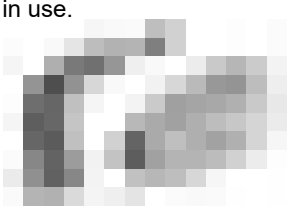

Part no.	Description
On request	TNS1 H_2 Service receptacle incl. protection cap

WEH® Breakaway coupling

The suitable TSA1 H_2 breakaway coupling, please see page 80.

Data cable

Part no.	Description	Hose length
E68-96194	Data cable suitable for 4 m hose set	4,45m
E68-96193	Data cable for connecting with the converter	3,45m

Other lengths on request

Spare parts

Various parts are available as spares for the WEH® TK20-S3 H_2 35 MPa ENR Medium-Flow Fueling nozzle.



Position	Part No.	Description
1	C1-189532	Impact protection sleeve (incl. screws)
2	C1-189535	IR data interface ATEX, NEC, KTL, CCC (incl. O-ring and screws)
3	C1-189537	Hand grip (incl. locking lever, clamp and screws)
4	C1-161748	Logo cap
5	C1-59738	Logo plate
6	C1-186082	Clamping nut for protective hose
7	C1-157491	Label
8	C1-189538	Handle protector (incl. screws)
	On request	Maintance spray

When ordering please specify the part no. engraved on the fueling nozzle.

TK20-S3 H_2 35 MPa Medium Flow

Description



Features
- Type C nozzle acc. to SAE J2600 resp. ISO 17268
- Very high flow rate
- Easy operation / single-handed operation
- Max. allowable operating pressure 48.125 MPa (MAWP according to ISO 19880-1:2020)
- Integrated purging line for nitrogen flushing
- WEH® EASY-TURN 250° swivel joint
- Optimized impact protection
- Plastic thermal protection
- Hand grip with magnet
- Compatible with pressure stage H35 Medium-Flow according to ISO 17268-1:2025 (see table below)

The WEH® TK20-S3 H_2 35 MPa Medium-Flow Fueling nozzle was developed for fast filling of cars with compressed, gaseous hydrogen (CGH2). Through to the larger nominal width, refueling with 120 g/s or higher is possible. In addition, this filling nozzle is designed for a maximum operating pressure of 48.125 MPa (= MAWP according to ISO 19880-1:2020).

The fueling nozzle is additionally equipped with a purging line that allows purging with nitrogen during and after refueling process. This can prevent ingress of moisture and the formation of ice crystals during filling with precooled hydrogen.

The WEH® TK20-S3 H_2 35 MPa Medium-Flow offers optimum safety for the operator thanks to the locking mechanism. The Fueling nozzle remains connected to the receptacle until the locking mechanism is released by the operator.

Application
Fueling nozzle for rapid filling of buses and trucks with hydrogen in self-service operation.

TN H_2 (Except TN5 H_2)

TK20-S3 H_2 35 MPa Medium-Flow	25 MPa	35 MPa	35 MPa MF*	35 MPa HF**	70 MPa
35 MPa			✓	✓	

*MF = Medium-Flow acc. to ISO 17268-1:2025
**HF = High-Flow acc. to ISO 17268:2012

Technical data

Characteristics	Basic version
Purging line Outer / inner diameter	6/4 mm
Nominal Pressure	PN = 35 MPa
Max. Allowable Operating Pressure	MAWP = 48.125 MPa according to ISO 17268 (PS = 481.25 bar)
Medium*	Hydrogen
Media Temperature Range	-40 °C up to +85 °C
Ambient Temperature Range	-40 °C up to +85 °C
Material	Corrosion resistant
Sealing Material	Hydrogen resistant
Nozzle Type	Type C acc. to SAE J2600:2015 and previous resp. ISO 17268:2020 and previous
Coding	H35MF according to ISO 17268-1:2025
Design	With plastic thermal protection / Optimized impact protection / Integrated purging line / Hand grip with magnet
Weight	Approx. 2.65 kg
Medium for Purging	Nitrogen or compressed air
Media Temperature Range Purging Medium	-40°C to +85°C (most effective >0°C)
Flow Rate During Purging	500 Nl/h at max. 12 bar purging pressure
Conformity / Tests / Approvals	Design validation based on ISO 17268-1:2025

* Suitable for pre-cooled hydrogen

Ordering - WEH® TK20-S3 H_2 35 MPa Medium-Flow Fueling nozzle

approx. dimensions (mm)

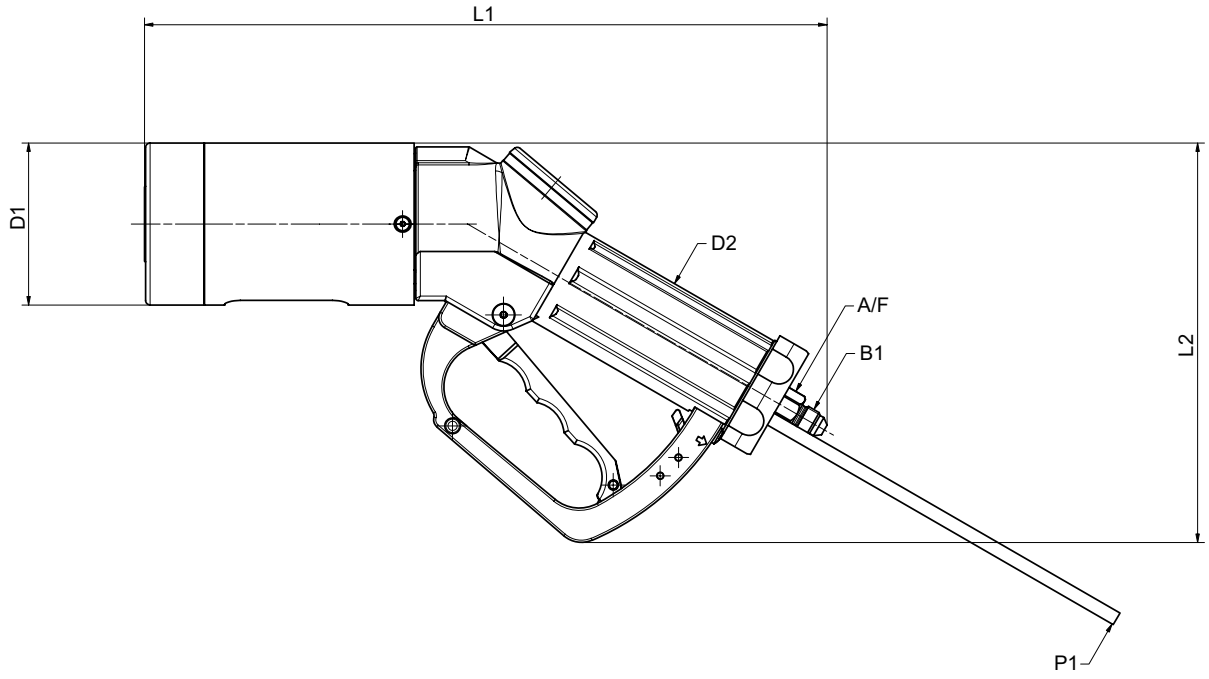

Part no.	Description	Pressure (MAWP)	B1 (male thread)	P1	L1	L2	D1	D2	A/F
C1-188784	TK20-S3H_2 35MPa Medium-Flow	48.125 MPa	UNF 7/16“-20*	6/4	304	178	72	46	15

* according to SAE J514 with 37° outer cone
Fueling assemblies consisting of fueling nozzle, hose set and breakaway coupling are available on request.

Accessories

The following accessories are available for the WEH® TK20-S3 H_2 35 MPa Medium-Flow Fueling nozzle:

Hose set

Hose set for connecting fueling nozzle and TSA1 H_2 breakaway coupling, complete with illing hose, purging line and braided protection hose as cover.

Design filling hose: max. operating pressure PS: 49 MPa / nominal bore fitting (TNW): 4.5 mm / media temperature range: -40°C up to +85°C



Part no.	B1/B2 (female thread)	P1 / P2	Hose length
C1-189989	UNF 7/16“-20*	Ø6	3 m
C1-189990	UNF 7/16“-20*	Ø6	4 m
C1-189991	UNF 7/16“-20*	Ø6	5 m

* according to SAE JIC, 37° sealing cone

Dispenser mounting

The fueling nozzle can also be used with a dispenser mounting, which is installed on the fuel dispenser.
Advanced dispenser mounting for fueling nozzles
With inductive sensor and M12x1 connector, explosion-proof according to ATEX

approx. dimensions (mm)

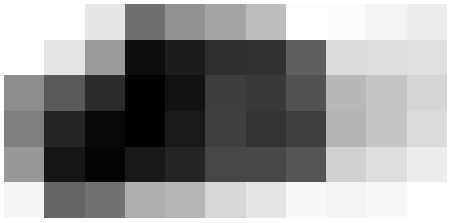

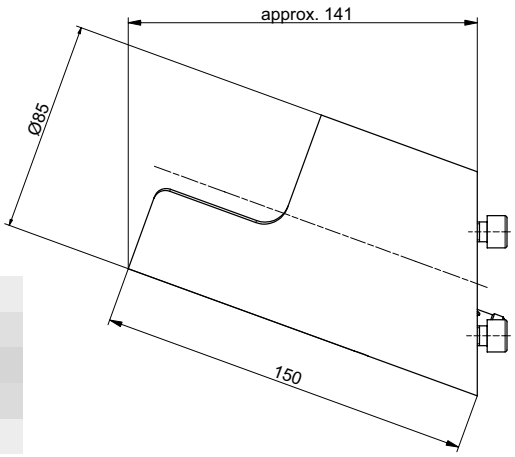

mounting bracket

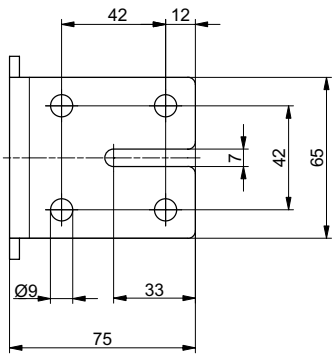

Part no.	Description
C1-190361	Dispenser mounting for TK20 H_2 (Including mounting bracket, installable in three different designs)

Classic dispenser mounting for fueling nozzles

With magnetic field sensor and 2 m cable, explosion-proof according to ATEX

approx. dimensions (mm)

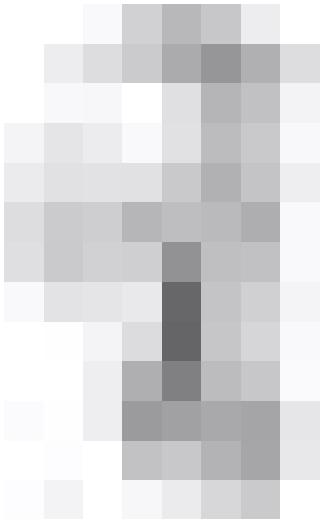

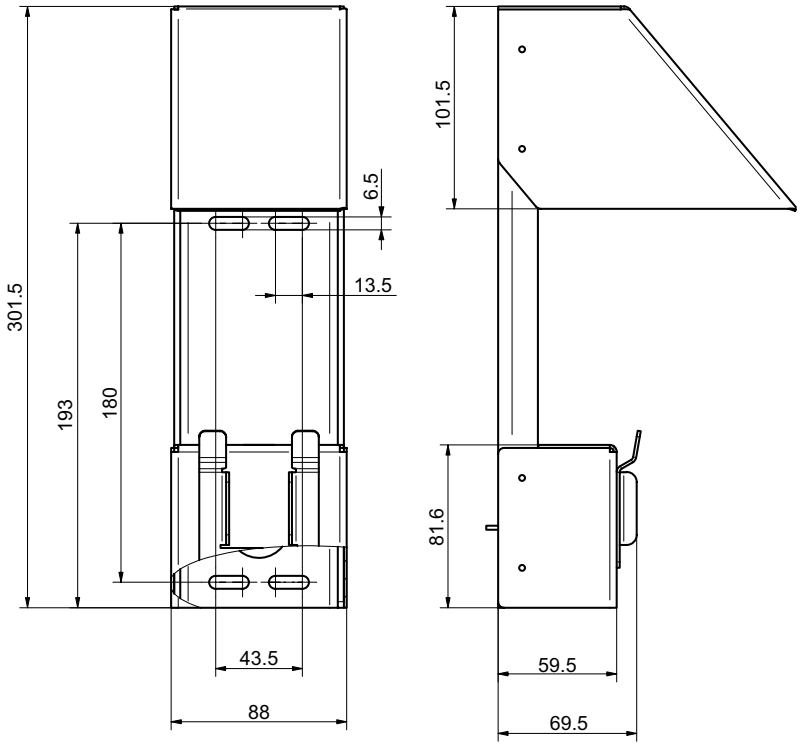

Part No.	Description
C1-191367	Dispenser mounting for TK20 H_2

WEH® TNS1 H_2 Service receptacle

To prevent damage in the fueling nozzle while leak testing during maintenance in the course of which pressure is applied, we recommend the use of a service receptacle. The receptacle also protects the fueling nozzle from dirt ingress whilst not in use.

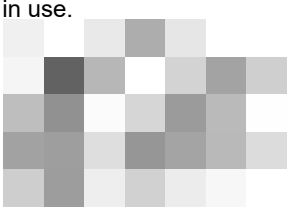

Part no.	Description
On request	TNS1 H_2 Service receptacle incl. protection cap

WEH® Breakaway coupling

The suitable TSA1 H_2 breakaway coupling, please see page 80.

Spare parts

Various parts are available as spares for the WEH® TK20-S3 H_2 35 MPa Medium-Flow Fueling nozzle.

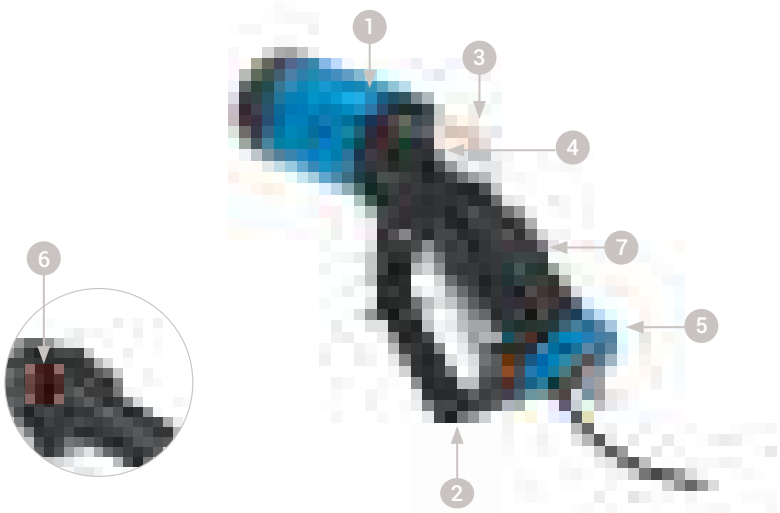

Position	Part No.	Description
1	C1-189532	Impact protection sleeve (incl. screws)
2	C1-189537	Hand grip (incl. locking lever, clamp and screws)
3	C1-161748	Logo cap
4	C1-59738	Logo plate
5	C1-186082	Clamping nut for protective hose
6	C1-157491	Label
7	C1-189538	Handle protector (incl. screws)
	On request	Maintance spray

When ordering please specify the part no. engraved on the fueling nozzle.

Description



Features
- Type A acc. to SAE J2600 resp. ISO 17268
- Exchangeable data interface (ENR)
- WEH EASY-TURN® 240° swivel joint for actuation lever
- Easy operation
- High flow rate short filling times
- Recirculation of the vented gas
- Plastic thermal protection
- WEH® Jaw locking mechanism
- High-grade materials
- Coding for pressure range / gas type (acc. to table below)

With the WEH® TK16 H_2 ENR the user has a fueling nozzle for hydrogen that makes refueling cars with compressed gaseous hydrogen (CGH_2) even easier than before. The fueling nozzle with exchangeable data interface is easy to operate and thus increases operator comfort.

The integrated swivel joint is located directly on the actuation lever, making it easy to rotate the fueling nozzle to the optimum connection position. The actuating lever can be switched with little effort when connecting and disconnecting.

The internal coding for pressure range and gas type ensures that the TK16 H_2 ENR can be connected to the compatible WEH® Receptacles acc. to the opposite table and also prevents the risk of confusion with natural gas. Furthermore, the fueling nozzle has an exchangeable interface (infrared) for data transfer between the vehicle and the fueling station.

TN H_2 (except TN5 H_2)

TK16 H_2 ENR	25 MPa	35 MPa	35 MPa MF*	35 MPa HF**	70 MPa
35 MPa		✓	✓	✓	✓

* MF = Medium-Flow acc. to ISO 17268-1:2025
** HF = High-Flow acc. to ISO 17268:2012

The WEH® TK16 H_2 ENR offers optimum safety for the operator.
The fueling nozzle remains connected to the receptacle until the gas between inlet valve and receptacle is depressurized.

Application

Fueling nozzle for hydrogen fast filling of cars at self-service fueling stations.

Technical data

Characteristics	Basic version
Technical nominal size (TNW)	8 mm
Nominal Pressure	PN = 35 MPa
Max. allowable operating Pressure	PS = 45 MPa
Media temperature range	-20 °C up to +85 °C
Ambient temperature range	-40 °C up to +85 °C
Material	Corrosion resistant
Sealing material	Hydrogen resistant
Nozzle type	Type A acc. to SAE J2600:2015 and previous resp. ISO 17268:2012 and previous
Design	With plastic thermal protection, gas recirculation and exchangeable data interface acc. to SAE J2799
Weight	Approx. 2.4 kg
Conformity / Tests / Approvals	Fueling nozzle: tests acc. to SAE J2600:2002 IR data interface: SAE J2799 and ATEX, NEC, KTL and CCC

Other designs on request

Ordering - WEH® TK16 H_2 ENR

approx. dimensions (mm)

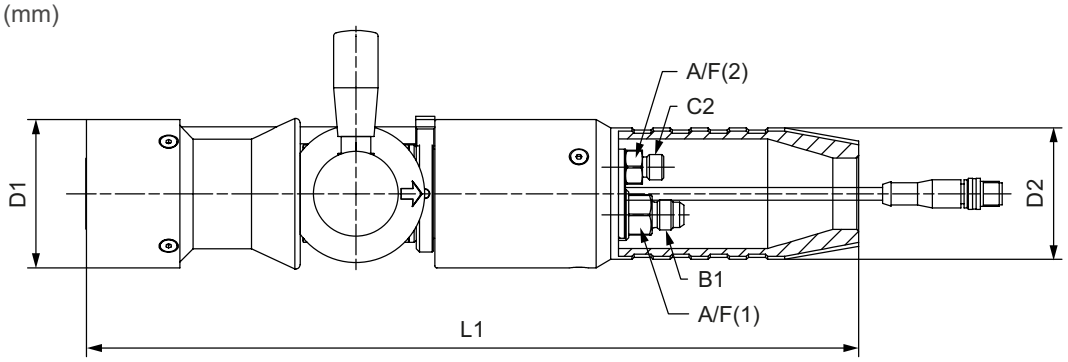

Part No.	Description	Pressure (MAWP)	B1 (male thread)	C2 (male thread)	L1	D1	D2	A/F (1)	A/F (2)
C1-103471-X01	TK16 H_2 ENR	45 MPa	UNF 9/16“-18*	M12x1,5	370	70	62	19	16

* acc to. SAE J514, 37° cone

Fueling assemblies consisting of fueling nozzle, hose set and breakaway coupling are available on request..

Accessories

The following accessories are available for the WEH® TK16 H_2 ENR Fueling nozzle:

Hose set

Hose set for connecting fueling nozzle and TSA1 H_2 breakaway coupling, complete with filling and venting hose, hose fittings, plastic spiral hose and cable for data interface. Not suitable for refueling with pre-cooled hydrogen acc. to SAE J2601.

Design filling/venting hose: max. operating pressure PS: 45 MPa / nominal bore fitting (TNW): 4.5 mm (filling hose) resp. 2 mm (venting hose) / media temperature range: -20 °C up to +90 °C



Part No.	B1/B2 (female thread)	C1/C2 (female thread)	Hose length
C1-90698	UNF 9/16“-18*	M12x1,5	3 m
C1-94428	UNF 9/16“-18*	M12x1,5	4 m
C1-94429	UNF 9/16“-18*	M12x1,5	5 m

* acc. to SAE JIC, 37° cone

Dispenser mounting

Mounting for safe attachment of the fueling nozzle to the dispenser.

Part no.	Description
On request	Dispenser mounting

WEH® TNS1 H_2 Service receptacle

To prevent damage in the fueling nozzle while purging or leak testing during maintenance in the course of which pressure is applied, we recommend the use of a service receptacle. The receptacle also protects the fueling nozzle from dirt ingress whilst not in use.

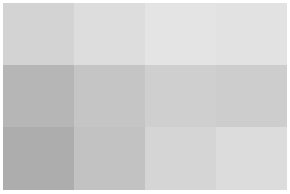

Part no.	Description
C1-148079	TNS1 H_2 Service receptacle incl. protection cap

WEH® Breakaway coupling

For the suitable TSA1 H_2 breakaway coupling, please see page 80.

Data cable

Part no.	Description	Hose length
E68-96194	UNF 9/16“-18*	4,45 m
E68-96193	UNF 9/16“-18*	3,45 m

Other lengths on request

Spare parts

Various parts are available as spares for the WEH® TK16 H_2 ENR Fueling nozzle.



Position	Part No.	Description
1	W180567	Impact protection (incl. 4 countersunk screws)
2	W180569	IR data interface (incl. o-ring and grub screw)
3	W72504	Actuation lever
4	E80-163068	Cover plate
5	W150340	Protection sleeve (incl. 3 countersunk screws)
	On request	Maintenance spray

Fueling nozzle

TK16 H_2

Description



Features
- Type A acc. to SAE J2600 resp. ISO 17268
- Compatible with WEH® TN1 H_2 Receptacle profile
- WEH EASY-TURN® 360° swivel joint for actuation lever
- Easy operation
- High flow rate short filling times
- Recirculation of the vented gas
- Plastic thermal protection
- WEH® Jaw locking mechanism
- High-grade materials
- Coding for pressure range / gas type (acc. to table below)

The WEH® TK16 H_2 Fueling nozzle makes refueling cars with compressed gaseous hydrogen (CGH_2) so much easier. The TK16 H_2 is very light in weight and therefore easy to operate.

The integrated swivel joint is located directly on the actuation lever, making it easy to rotate the fueling nozzle to the optimum connection position. The actuating lever can be switched with little effort when connecting and disconnecting.

The internal coding for pressure range and gas type ensures that the TK16 H_2 can be connected to the compatible WEH® Receptacles acc. to the opposite table and also prevents the risk of confusion with natural gas.

The WEH® TK16 H_2 offers optimum safety for the operator.
The fueling nozzle remains connected to the receptacle until the gas between inlet valve and receptacle is depressurized.

TN H_2 (Except TN5 H_2)

TK16 H_2	25 MPa	35 MPa	35 MPa MF*	35 MPa HF*	70 MPa
25 MPa	✓	✓	✓	✓	✓
35 MPa		✓	✓	✓	✓

* MF = Medium-Flow acc. to ISO 17268-1:2025
**HF = High-Flow acc. to ISO 17268:2012

Application
Fueling nozzle for hydrogen fast filling of cars at self-service fueling stations.

Technical data

Characteristics	Basic version
Technical nominal size (TNW)	8 mm
Technical nominal size (TNW)	PN = 25 MPa / PN = 35 MPa
Max. allowable operating Pressure	PS = 45 MPa
Media temperature range	-20 °C up to +85 °C
Ambient temperature range	-40 °C up to +85 °C
Material	Corrosion resistant
Sealing material	Hydrogen resistant
Nozzle type	Type A acc. to SAE J2600:2015 and previous resp. ISO 17268:2012 and previous
Design	With plastic thermal protection and gas recirculation
Weight	Approx. 1.8 kg
Conformity / Tests / Approvals	Tests acc. to SAE J2600:2002

Other designs on request

Ordering - WEH® TK16 H_2 Fueling nozzle

approx. dimensions (mm)

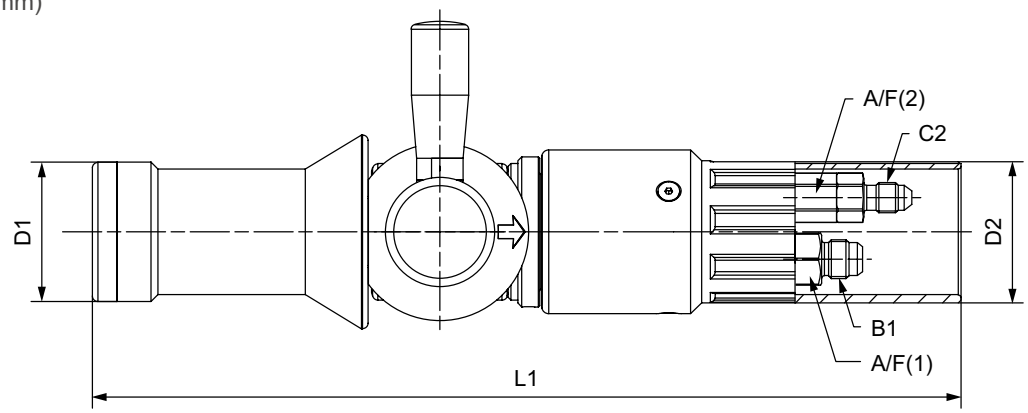

Part No.	Description	Pressure (MAWP)	B1 (male thread)	C2 (male thread)	L1	D1	D2	A/F (1)	A/F (2)
C1-45695-X4-X01	TK16 H_2 25 MPa	35 MPa	UNF 9/16“-18*	UNF 7/16“-20*	319	51	52	19	16
C1-45696-X5-X01	TK16 H_2 35 MPa	45 MPa	UNF 9/16“-18*	UNF 7/16“-20*	324	51	52	19	16

* acc. to SAE J514, 37° cone
Fueling assemblies consisting of fueling nozzle, hose set and breakaway coupling are available on request.

Accessories

The following accessories are available for the WEH® TK_{16} H_2 Fueling nozzle:

Hose set

Hose set for connecting fueling nozzle and TSA1 H_2 breakaway coupling, complete with filling and venting hose, fittings and press-fittings supported by coil spring stubs. Not suitable for refueling with pre-cooled hydrogen acc. to SAE J2601.

Design filling/venting hose: max. operating pressure PS: 45 MPa / technical nominal size (TNW): 4.5 mm / media tempera ture range: -20 °C up to +90 °C



Part No.	B1/B2 (female thread)	C1/C2 (female thread)	Hose length
C1-60917	UNF 9/16“-18*	UNF 7/16“-20*	3 m
C1-60920	UNF 9/16“-18*	UNF 7/16“-20*	4 m
C1-60923	UNF 9/16“-18*	UNF 7/16“-20*	5 m

* acc. to SAE JIC, 37° cone

Dispenser mounting

Mounting for safe attachment of the fueling nozzle to the dispenser.

Part No.	Description
On request	Dispenser mounting

WEH® TNS1 H_2 Service receptacle

To prevent damage in the fueling nozzle while leak testing during maintenance in the course of which pressure is applied, we recommend the use of a service receptacle. The receptacle also protects the fueling nozzle from dirt ingress whilst not in use.

Part no.	Description
C1-148079	TNS1 H_2 Service receptacle incl. protection cap

WEH® Breakaway couplings

For the suitable TSA1 H_2 breakaway coupling or TSA2 H_2 inline breakaway coupling, please see page 80 resp. 88.

Spare parts

Various parts are available as spares for the WEH® TK16 H_2 Fueling nozzle.



Position	Part No.	Description
1	E80-176344	Impact protection
2	W72504	Actuation lever
3	E80-163068	Cover plate
4	W136178	Protection sleeve (incl. 3 countersunk screws)
	On request	Maintenance spray

Description



Features
- Type A acc. to SAE J2600 resp. ISO 17268
- Integrated infrared data interface
- WEH EASY-TURN® 240° swivel joint for actuation lever
- Easy operation
- Increased flow rate even shorter filling times
- Recirculation of the vented gas
- Plastic thermal protection
- WEH® Jaw locking mechanism
- High-grade materials
- Coding for pressure range / gas type (acc. to table below)

The WEH® TK16 H2 High-Flow Fueling nozzle with data interface enables an even faster filling of buses and trucks with hydrogen. Due to the increased flow rate, the already short filling times have been shortened even further.
The integrated swivel joint is located directly on the actuation lever, making it easy to rotate the fueling nozzle to the optimum connection position. The actuating lever can be switched with little effort when connecting and disconnecting.

The internal coding for pressure range and gas type ensures that the TK16 H_2 High Flow with data interface can be connected to the compatible WEH® Receptacles acc. to the opposite table and also prevents the risk of confusion with natural gas. Furthermore, the fueling nozzle has an interface (infrared) for data transfer between the vehicle and the fueling station.

The WEH® TK16 H_2 High-Flow with data interface offers optimum safety for the operator. The fueling nozzle remains connected to the receptacle until the gas between inlet valve and receptacle is depressurized.

TN H_2 (Except TN5 H_2)

TK16 H_2 HF IR	25 MPa	35 MPa	35 MPa MF*	35 MPa HF*	70 MPa
35 MPa HF*			✓	✓	

* MF = Medium-Flow acc. to ISO 17268-1:2025
** HF = High-Flow acc. to ISO 17268:2012

Application
Fueling nozzle for hydrogen fast filling of buses and trucks at self-service fueling stations.

Technical data

Characteristics	Basic version
Technical nominal size (TNW)	8 mm
Nominal Pressure	PN = 35 MPa
Max. allowable operating Pressure	MAWP = 45 MPa (PS = 450 bar)
Media temperature range	-20 °C up to +85 °C
Ambient temperature range	-40 °C up to +85 °C
Material	Corrosion resistant
Sealing material	Hydrogen resistant
Nozzle type	Type A acc. to SAE J2600:2015 and previous resp. ISO 17268:2012 and previous
Design	With plastic thermal protection, gas recirculation and data interface acc. to SAE J2601
Weight	Approx. 2.4 kg
Conformity / Tests / Approvals	Fueling nozzle: tests acc. to SAE J2600:2002 / IR data interface: ATEX; NEC on request

Other designs on request

Ordering - WEH® TK16 H_2 High-Flow Fueling nozzle with data interface

approx. dimensions (mm)

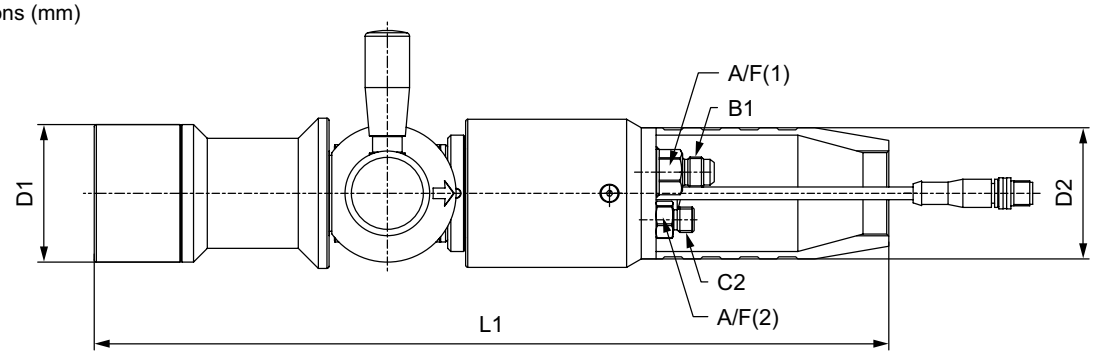

Part No.	Description	Pressure (MAWP)	B1 (male thread)	C2 (male thread)	L1	D1	D2	A/F (1)	A/F (2)
C1-103471-X01	TK16 H2 High-Flow (ATEX IR data interface)	45 MPa	UNF 9/16“-18*	M12x1,5	381	65	62	19	16

* acc. to SAE J514, 37° cone

On request the TK16 H_2 High-Flow Fueling nozzle with data interface is also available with NEC approval.
Fueling assemblies consisting of fueling nozzle, hose set and breakaway coupling are available on request.

Accessories

The following accessories are available for the WEH® TK16 H_2 High-Flow Fueling nozzle with data interface:

Hose set

Hose set for connecting fueling nozzle and TSA1 H_2 breakaway coupling, complete with filling and venting hose, hose fittings, plastic spiral hose and cable for data interface. Not suitable for refueling with pre-cooled hydrogen acc. to SAE J2601.
Design filling/venting hose: max. operating pressure PS: 45 MPa / nominal bore fitting (TNW): 4.5 mm (filling hose) resp. 2 mm (venting hose) / media temperature range: -20 °C up to +90 °C



Part No.	B1/B2 (female thread)	C1/C2 (female thread)	Hose length
C1-90698	UNF 9/16“-18*	M12x1,5	3 m
C1-94428	UNF 9/16“-18*	M12x1,5	4 m
C1-94429	UNF 9/16“-18*	M12x1,5	5 m

* acc. to SAE JIC, 37° cone

Dispenser mounting

Mounting for safe attachment of the fueling nozzle to the dispenser.

Not switch actuated dispenser mounting with protection of front sleeve

approx. dimensions (mm)

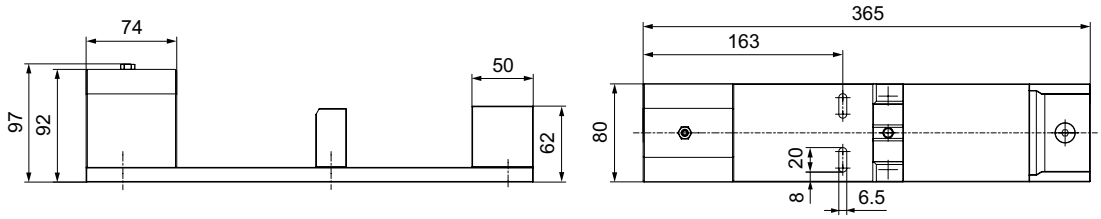

Switch actuated dispenser mounting with weather protection
approx. dimensions (mm)

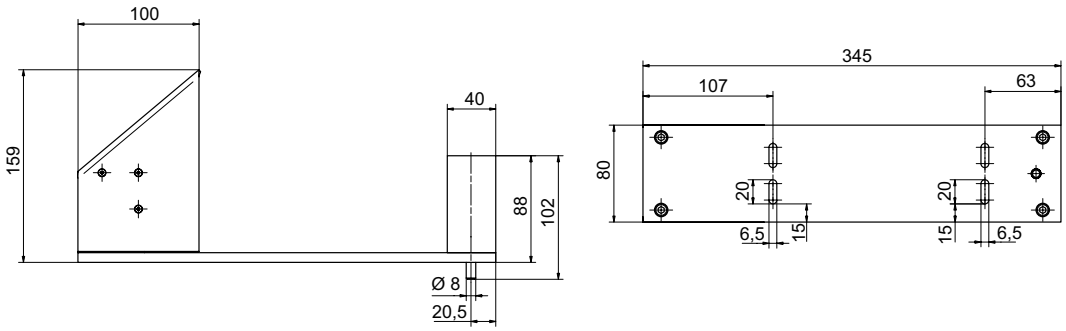

Switch actuated dispenser mounting with weather protection and angle plate 15°
approx. dimensions (mm)

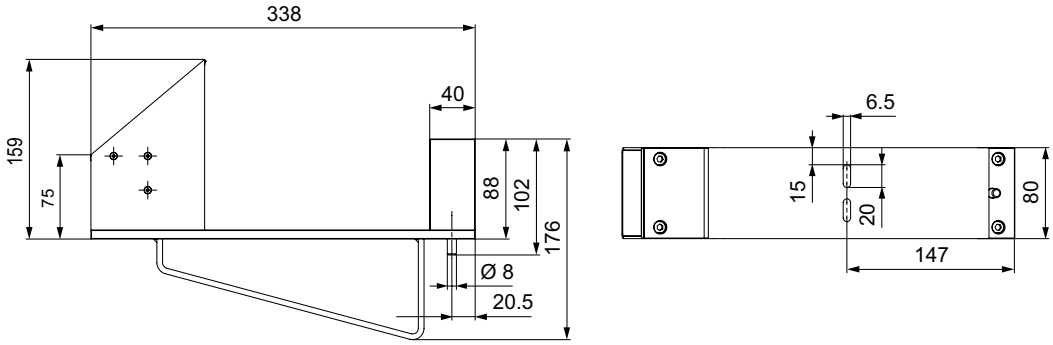



Part No.	Description
C1-94671	Dispenser mounting (not switch actuated) with protection of front sleeve
C1-94671	Dispenser mounting (switch actuated) with weather protection
C1-114632	Dispenser mounting (switch actuated) with weather protection and angle plate 15°

WEH® TNS1 H_2 Service receptacle

To prevent damage in the fueling nozzle while leak testing during maintenance in the course of which pressure is applied, we recommend the use of a service receptacle. The receptacle also protects the fueling nozzle from dirt ingress whilst not in use.

Part no.	Description
C1-148079	TNS1 H_2 Service receptacle incl. protection cap

WEH® Breakaway coupling

For the suitable TSA1 H_2 breakaway coupling, please see page 80 resp. 88.

Data cable

Part no.	Description	Hose length
E68-96194	UNF 9/16“-18*	4,45 m
E68-96193	UNF 9/16“-18*	3,45 m

Other lengths on request

Spare parts

Various parts are available as spares for the WEH® TK16 H_2 High-Flow Fueling nozzle with data interface.



Position	Part No.	Description
1	W72504	Actuation lever
2	E80-163068	Cover plate
3	W150340	Protection sleeve (incl. 3 countersunk screws)
	On request	Maintenance spray

Description



Features
- Type A acc. to SAE J2600 resp. ISO 17268
- Compatible with WEH® TN1 H_2 High-Flow Receptacle profile
- WEH EASY-TURN® 360° swivel joint for actuation lever
- Easy operation
- Increased flow rate even shorter filling times
- Recirculation of the vented gas
- Plastic thermal protection
- WEH® Jaw locking mechanism
- High-grade materials
- Coding for pressure range / gas type (acc. to table below)

The WEH® TK16 H_2 High-Flow Fueling nozzle enables an even faster filling of buses and trucks with hydrogen. Due to the increased flow rate, the already short filling times have been shortened even further. The integrated swivel joint is located directly on the actuation lever, making it easy to rotate the fueling nozzle to the optimum connection position. The actuating lever can be switched with little effort when connecting and disconnecting.

The internal coding for pressure range and gas type ensures that the TK16 H_2 High Flow can be connected to the compatible WEH® Receptacles acc. to the opposite table and also prevents the risk of confusion with natural gas.

TN H_2 (Except TN5 H_2)

TK16 H_2 HF	25 MPa	35 MPa	35 MPa MF*	35 MPa HF**	70 MPa
35 MPa HF*			✓	✓	

* MF = Medium-Flow acc. to ISO 17268-1:2025
** HF = High-Flow acc. to ISO 17268:2012

The WEH® TK16 H2High-Flow offers optimum safety for the operator.
The fueling nozzle remains connected to the receptacle until the gas between inlet valve and receptacle is depressurized.

Application
Fueling nozzle for hydrogen fast filling of buses and trucks at self-service fueling stations.

Technical data

Characteristics	Basic version
Technical nominal size (TNW)	8 mm
Nominal Pressure	PN = 35 MPa
Max. allowable operating Pressure	MAWP = 45 MPa (PS = 450 bar)
Media temperature range	-20 °C up to +85 °C
Ambient temperature range	-40 °C up to +85 °C
Material	Corrosion resistant
Sealing material	Hydrogen resistant
Nozzle type	Type A acc. to SAE J2600:2015 and previous resp. ISO 17268:2012 and previous
Design	With plastic thermal protection and gas recirculation
Weight	Approx. 1.8 kg
Conformity / Tests / Approvals	Tests acc. to SAE J2600:2002

Other designs on request

Ordering - WEH® TK16 H_2 High-Flow Fueling nozzle

approx. dimensions (mm)

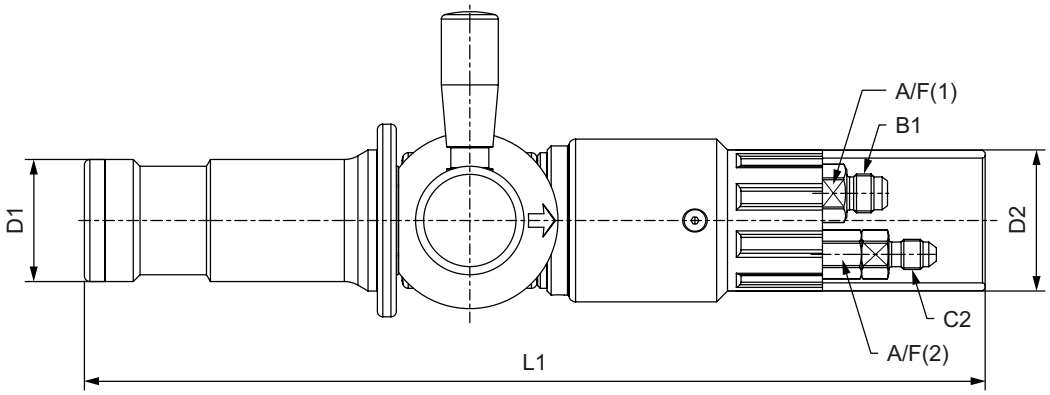

Part No.	Description	Pressure (MAWP)	B1 (male thread)	C2 (male thread)	L1	D1	D2	A/F (1)	A/F (2)
C1-85042-X01	TK16 H_2 High flow	45 MPa	UNF 9/16“-18*	UNF 7/16“-20*	338	45	52	19	16

* acc. to SAE J514, 37° cone

Fueling assemblies consisting of fueling nozzle, hose set and breakaway coupling are available on request.

Accessories

The following accessories are available for the WEH® TK_{16} H_2 High-Flow Fueling nozzle:

Hose set

Hose set for connecting fueling nozzle and TSA1 H_2 breakaway coupling, complete with filling and venting hose, fittings and press-fittings supported by coil spring stubs. Not suitable for refueling with pre-cooled hydrogen acc. to SAE J2601.
Design filling/venting hose:
max. operating pressure PS: 45 MPa / technical nominal size (TNW): 4.5 mm / media temperature range: -20 °C up to +90 °C



Part No.	B1/B2 (female thread)	C1/C2 (female thread)	Hose length
C1-60917	UNF 9/16“-18*	UNF 7/16“-20*	3 m
C1-60920	UNF 9/16“-18*	UNF 7/16“-20*	4 m
C1-60923	UNF 9/16“-18*	UNF 7/16“-20*	5 m

* acc. to SAE JIC, 37° cone

Dispenser mounting

Mounting for safe attachment of the fueling nozzle to the dispenser.

Switch actuated (with pin) resp. not switch actuated dispenser mounting

approx. dimensions (mm)

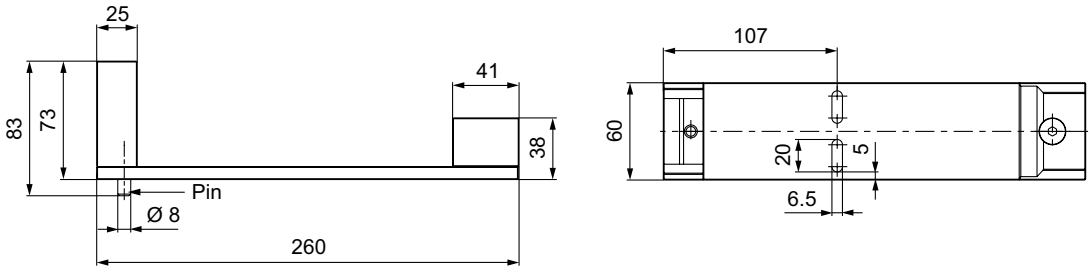

Switch actuated dispenser mounting with weather protection

approx. dimensions (mm)

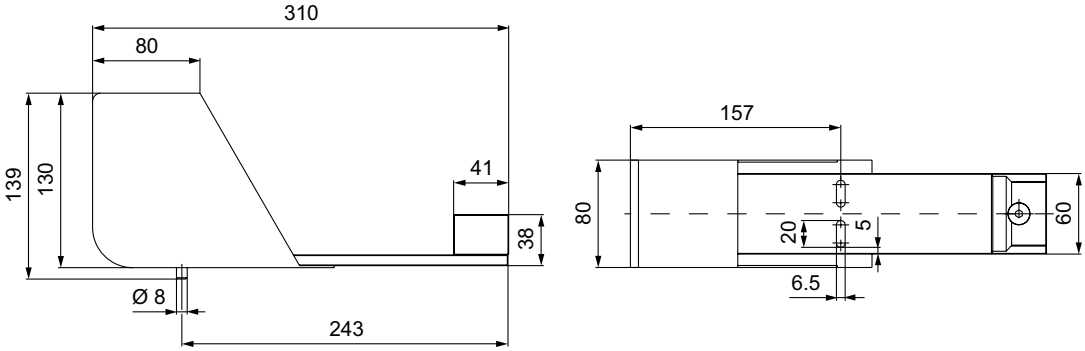



Part No.	Description
C1-86860	Dispenser mounting (switch actuated)
C1-109880	Dispenser mounting (not switch actuated)
C1-109678	Dispenser mounting (switch actuated) with weather protection

WEH® TNS1 H₂ Service receptacle

To prevent damage in the fueling nozzle while leak testing during maintenance in the course of which pressure is applied, we recommend the use of a service receptacle. The receptacle also protects the fueling nozzle from dirt ingress whilst not in use.

Part no.	Description
C1-148079	TNS1 H₂ Service receptacle incl. protection cap

WEH® Breakaway couplings

For the suitable TSA1 H₂ breakaway coupling or TSA2 H₂ inline breakaway coupling, please see page 80 resp. 88.

Spare parts

Various parts are available as spares for the WEH® TK16 H_2 High-Flow Fueling nozzle.



Position	Part No.	Description
1	E80-172676	Impact protection
2	W72504	Actuation lever
3	E80-163068	Cover plate
4	W136178	Protection sleeve (incl. 3 countersunk screws)
	On request	Maintenance spray

Description

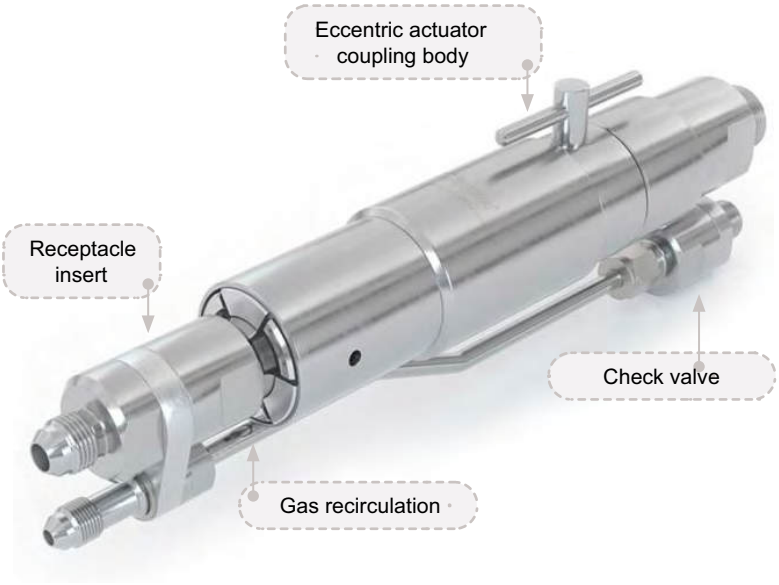

Features
- Reusable without factory servicing
- Installation at the dispenser
- Small compact design
- Version with and without gas recirculation
- Integrated cleanable filter (20 µm or 40 µm)
- Check valve at venting line
- No additional tool necessary

The WEH® TSA1 H_2 Breakaway coupling offers additional safety for your car fueling station. The breakaway is installed between the dispenser and the filling hose or dispenser and filling/venting hose.

In the event of unexpected tensile forces, e.g. a vehicle driving away with a connected fueling nozzle, the breakaway separates the connections between dispenser and hose(s) in a controlled manner while sealing both ends.
Damage to the vehicles receptacle, the fueling nozzle and the dispenser can thus be prevented as far as possible.
The breakaway coupling can be reused after a functional test.
The integrated filter cleans the hydrogen from dirt ingress and can be cleaned easily and quickly during maintenance.

The WEH® TSA1 H_2 Breakaway coupling consists of a coupling body, a receptacle insert and, depending on the version, of a gas recirculation with check valve. A dispenser mounting is available as an accessory.
For fueling nozzle with data interface, the TSA1 H_2 is also available with a data cable that can be mounted on the mounting.

Refueling kits are also available. They consist of a fueling nozzle, hose set, tear-off protection, fuel pump holder, and data cable. Please inquire for more information.

Application
Breakaway coupling for car hydrogen fueling stations for direct installation at the dispenser.

Technical data

Characteristics	Basic version
Technical nominal size (TNW)	Depending on design
Nominal Pressure	PN = 35 MPa
Max. allowable operating Pressure	MAWP = 49 MPa, 45 MPa according to ISO 19880-1 (PS = 490 bar, 450 bar), depending on design
Media temperature range	TSA1 H_2 for TK17 H2 fueling nozzles: -40 °C up to +85 °C TSA1 H_2 for TK16 H2 fueling nozzles: -20 °C up to +85 °C
Ambient temperature range	-40 °C up to +85 °C
Breakaway force	222 – 667 N
Material	Corrosion resistant stainless steel, aluminum
Sealing material	Hydrogen resistant
Design	Depending on design: With filter (20 µm or 40 µm) With or without gas recirculation With or without dispenser mounting With dispenser mounting and data cable (only versions for fueling nozzles with data interface)

Other designs on request

Ordering - WEH® TSA1 H_2 Breakaway coupling for TK20-S2 H_2 35 MPa und TK20-S3 $H_2$35 MPa Medium-Flow

approx. dimensions (mm)

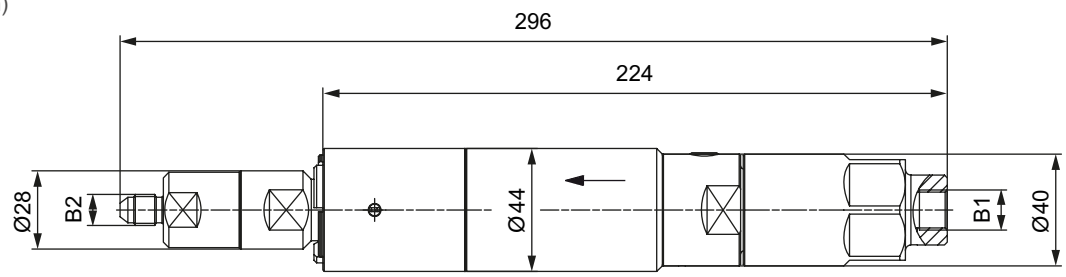

Part No.	Description	TNW	Pressure (MAWP)	B1 (female thread)	C2 (male thread)
C1-174444	TSA1 H_2 with filter (20 µm)	4mm	49 MPa	UNF 9/16“-18*	UNF 7/16“-20*

* MP-fitting, 60° inner cone
** acc. to SAE J514, 37° cone



Ordering - WEH® TSA1 H₂ Breakaway coupling with male thread for TK16 H₂ + High-Flow

approx. dimensions (mm)

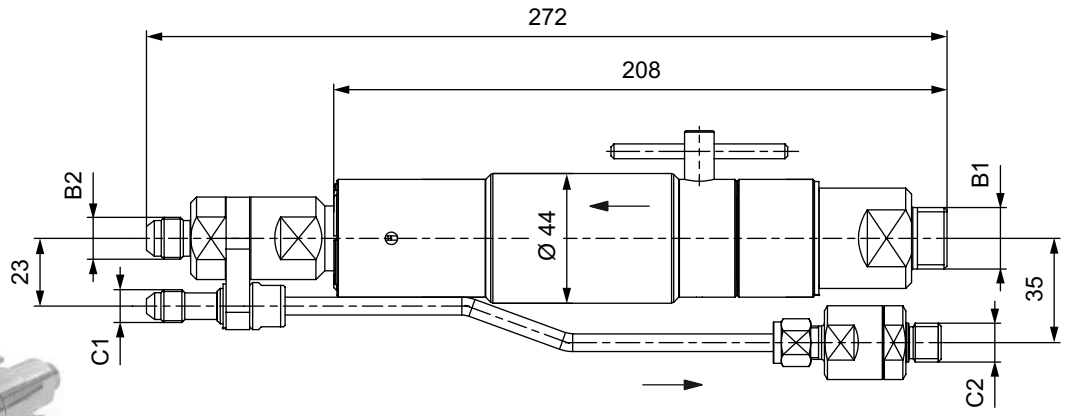



Part No.	Description	TNW	Pressure (MAWP)	B1 (male thread)	B2 (male thread)	C1 (male thread)	C2 (male thread)
C1-18834-X7-X01	TSA1 H₂ with filter (40 µm)	7mm	45 MPa	G1/2“	UNF 9/16“-18*	UNF 7/16“-20*	G1/4“
C1-67741-X1-X01	TSA1 H₂ with filter (20 µm)	7mm	45 MPa	G1/2“	UNF 9/16“-18*	UNF 7/16“-20*	G1/4“

* acc. to DIN EN ISO 228-1
** acc. to SAE J514, 37° cone

Ordering - WEH® TSA1 H₂ Breakaway coupling with female thread for TK16 H₂+ High-Flow

approx. dimensions (mm)

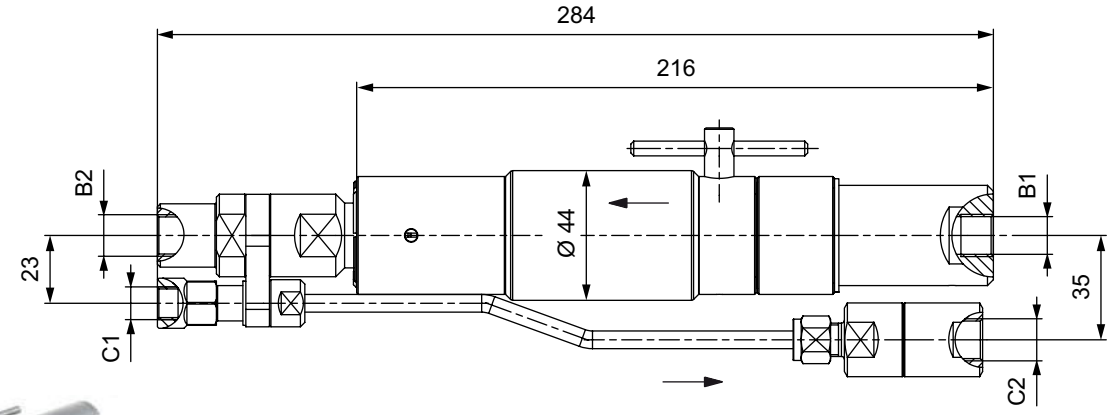



Part No.	Description	TNW	Pressure (MAWP)	B1/B2 (female thread)	C1 (female thread)	C2 (female thread)
C1-99345-X01	TSA1 H₂ with filter (40 µm)	5mm	45 MPa	UNF 9/16“-18	UNF 7/16“-20*	UNF 9/16“-18*

* MP-fitting, 60° inner cone

Ordering - WEH® TSA1 H_2 Breakaway coupling with male thread for TK16 H_2 + High-Flow

approx. dimensions (mm)

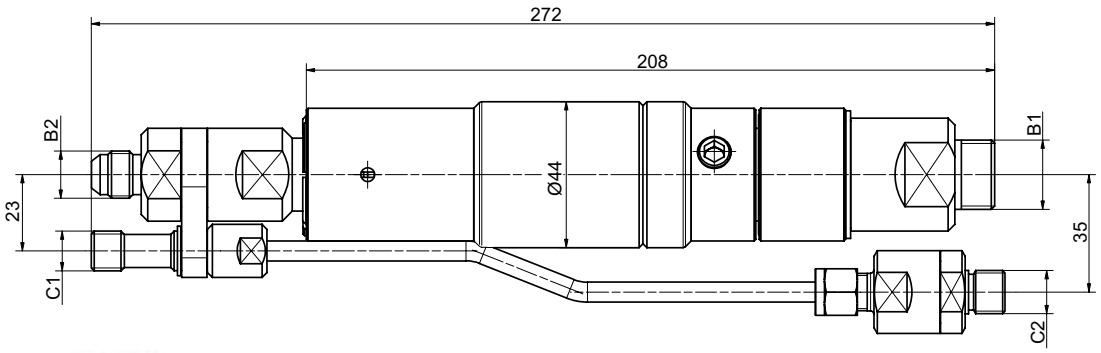



Part No.	Description	TNW	Pressure (MAWP)	B1 (male thread)	B2 (male thread)	C1 (male thread)	C2 (male thread)
C1-91911-X01	TSA1 H_2 com filtro (40 µm)	8mm	45 MPa	G1/2“**	UNF 9/16“-18*	M12X1,5***	G1/4“**

*according to DIN EN ISO 228-1
**according to SAE J514, 37° cone
***24° inner cone

Accessories

The following accessories are available for the WEH® TSA1 H₂ breakaway coupling

Dispenser mounting

The breakaway coupling can also be used in combination with a mounting. The mounting is mounted on the dispenser. A guide tube is integrated into the bracket, which ensures a straight pull force regardless of the direction of pull.

Dispenser mounting for fueling nozzles without data interface

approx. dimensions (mm)



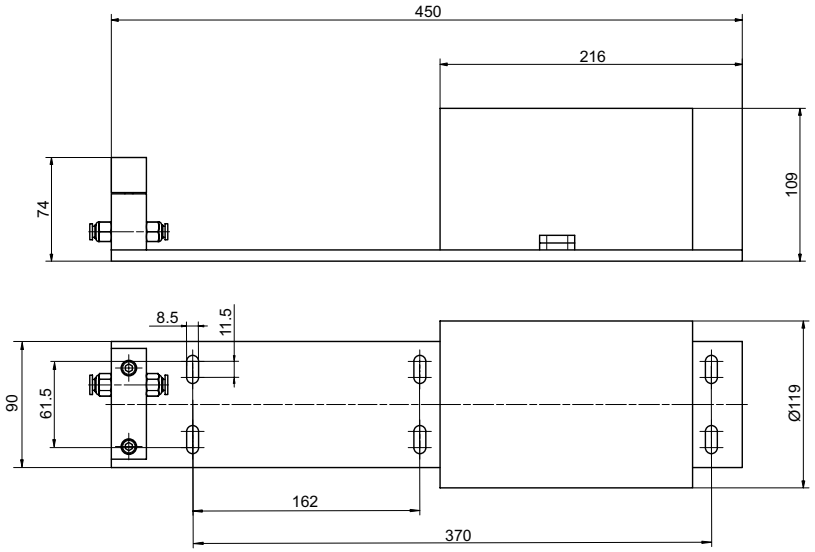

Part No.	Description
C1-191133	Dispenser mounting for TSA1 H₂ for fueling nozzles without data interface

Dispenser mounting for fueling nozzles with data interface

approx. dimensions (mm)



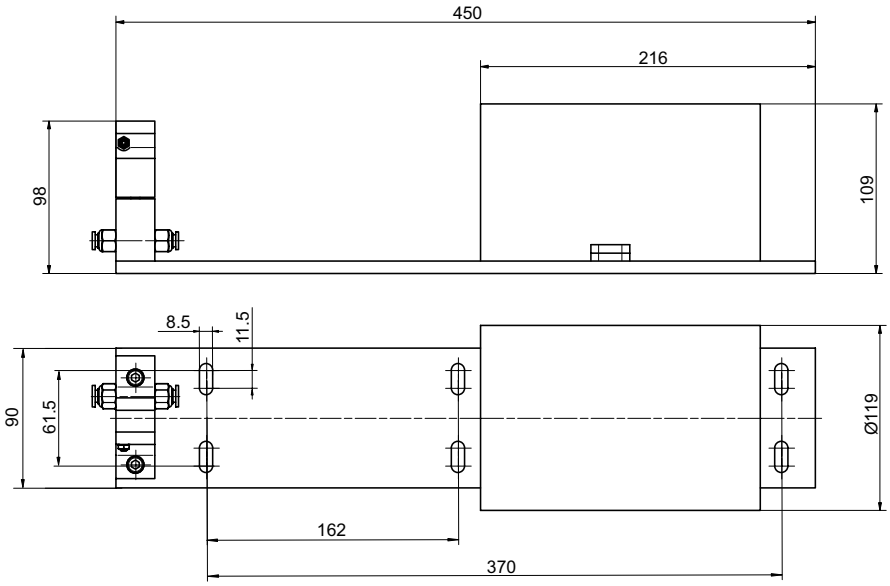

Part No.	Description
C1-191132	Dispenser mounting for TSA1 H₂ for fueling nozzles with data interface

Data cable

Part No.	Description	Length
C1-96193	Data cable (for dispenser side)	3,45m

Hoses

Suitable hoses for the TSA1 H_2 breakaway coupling are available on request.

Mounting for braided protection hose
Mounting for attachment of the braided protection hose to the TSA1 H_2 without gas recirculation.

Part No.	Description
C1-171845	Mounting for braided protection hose (suitable for C1-174444, C1-174446, C1174456)

Spare parts

Various parts are available as spares for the WEH® TSA1 H_2 Breakaway coupling.

Part No.	Description
W159176	Receptacle insert for TSA1 H_2 without gas recirculation (C1-174444, C1-174446, C1-174456)
W94249	Receptacle insert for TSA1 H_2 with gas recirculation (C1-18834-X7-X01, C1-67741-X1-X01)
W108401	Receptacle insert for TSA1 H_2 with gas recirculation (C1-99345-X01)
W108154	Receptacle insert for TSA1 H_2 with gas recirculation (C1-90679-X01)
B200B-123477	Spare seals set for receptacle insert W159176
B200B-119056	Spare seals set for receptacle insert W94249, W108401, W108154
W139032	Spare parts set consisting of a gas recirculation tube (length: approx. 195 mm) and a firmly mounted check valve (C1-18834-X7-X01, C1-67741-X1-X01, C1 90679-X01)
W140024	Spare parts set consisting of a gas recirculation tube (length: approx. 195 mm) and a firmly mounted check valve (C1-99345-X01)
E69-9061	Wire filter insert 40 µm (incl. spring and o-ring)
W67754	Wire filter insert 20 µm (incl. spring and o-ring)

Inline breakaway coupling

TSA2 H_2

Description

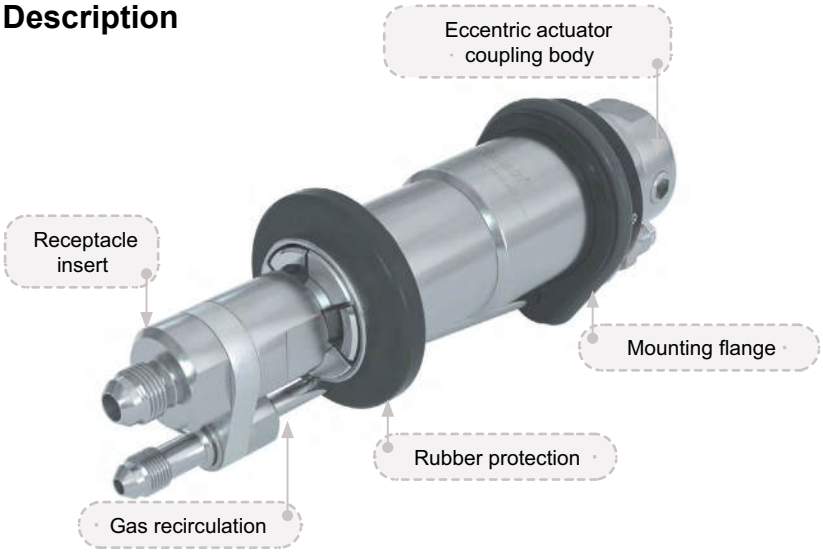

Features
- Reusable without factory servicing
- Installation between the filling and venting hoses
- Small compact design
- Rubber protection and mounting flange incl. impact proctection
- Eccentric actuation via Allen wrench

With the WEH® TSA2 H_2 Breakaway coupling, an inline breakaway coupling is also available for car refueling stations which is installed between the filling and venting hoses.

In the event of unexpected tensile forces, e.g. a vehicle driving away with a connected fueling nozzle, the breakaway separates the connections between dispenser and hoses in a controlled manner while sealing both ends.
Damage to the vehicule's receptacle, the fueling nozzle and the dispenser can thus be prevented as far as possible.
The breakaway coupling can be reused after a functional test.

The WEH® Breakaway coupling consists of a coupling body, a receptacle insert and a gas recirculation.

When using a TSA2 H_2 inline breakaway coupling, we additionally recommend the WEH® TSF2 H_2 Filter (see page 94).
The filter protects the breakaway coupling and fueling nozzle from dirt ingress.

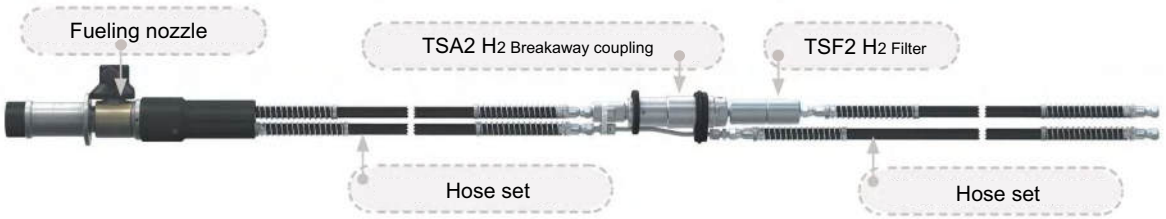

On request we also offer fueling assemblies consisting of fueling nozzle, hose set and inline breakaway coupling.

Application

Inline breakaway coupling for car hydrogen fueling stations for installation between the filling and venting hoses.

Technical data

Characteristics	Basic version
Technical nominal size (TNW)	8 mm
Nominal Pressure	PN = 35 MPa
Max. allowable operating Pressure	MAWP = 45 MPa (PS = 450 bar)
Media temperature range	-20 °C up to +85 °C
Ambient temperature range	-40 °C up to +85 °C
Breakaway force	222 – 667 N
Material	Corrosion resistant stainless steel, aluminum
Sealing material	Hydrogen resistant
Design	With gas recirculation

Other designs on request

Ordering - WEH® TSA2 H2 Inline breakaway coupling for TK16 H2 (+ High-Flow)

approx. dimensions (mm)



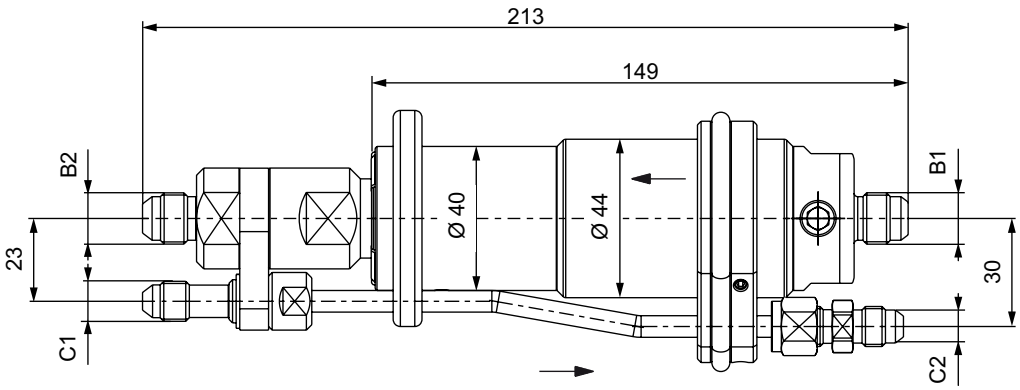

Part No.	Description	TNW	Pressure (MAWP)	B1/B2 (male thread)	C1/C2 (male thread)
C1-77240-X01	TSA2 H₂	7mm	45 MPa	UNF 9/16“-18*	UNF 7/16“-20*

* acc. to SAE J514, 37° cone

Accessories

The following accessories are available for the WEH® TSA2 H₂ Inline breakaway coupling:

WEH® TSF2 H₂ Filter

When using a TSA2 H₂ inline breakaway coupling, we additionally recommend the WEH® TSF2 H₂ Filter (see page 90). The filter protects the breakaway coupling and fueling nozzle from dirt ingress. The TSF2 H2is installed as a prefilter in the media inlet between the inline breakaway coupling and the filling hose.

approx. dimensions (mm)



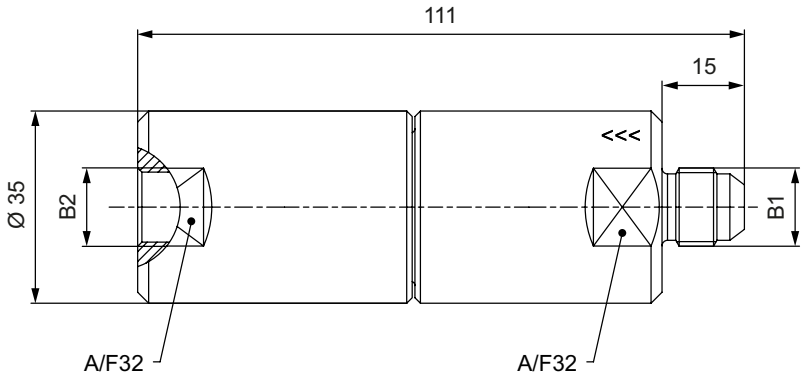

Part No.	Description	Filter (µm)	TNW	Pressure (MAWP)	B1 (male thread)	B2 (female thread)
C1-134710-X01	TSF2 H₂	40	8mm	45 MPa	UNF 9/16“-18*	UNF 9/16“-18*
C1-134711-X01	TSF2 H₂	20	8mm	45 MPa	UNF 9/16“-18*	UNF 9/16“-18*

*acc. to SAE J514, 37° cone

Hoses

Suitable hoses for the TSA2 H₂ inline breakaway coupling are available on request.

Spare parts

Various parts are available as spares for the WEH® TSA2 H_2 Inline breakaway coupling.

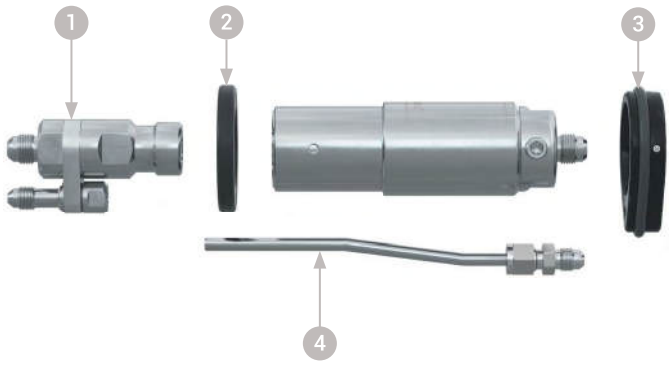

Position	Part No.	Description
1	W94249	Receptacle insert for TSA$_2$ H_2
	B200B-119056	Spare seals set for receptacle insert W94249
2	E80-71324	Front rubber protection
3	W150599	Mounting flange incl. impact protection
4	W139030	Spare part sets consisting of a gas recirculation tube and a firmly mounted fitting

Fueling nozzle

TK25 H_2

Description



Features
- Type A nozzle acc. to SAE J2600 resp. ISO 17268
- Compatible with WEH® TN5 H_2 receptacle profile
- Safe handling due to special safety function when disconnecting
- High flow rate short filling times
- Recirculation of the vented gas
- Plastic thermal protection
- WEH® Jaw locking mechanism
- High-grade materials
- Coding for pressure range / gas type (acc. to table below)

The WEH® TK25 H_2 Fueling nozzle enables easy refueling of buses and trucks
Simply place the TK25 H_2 fueling nozzle onto the receptacle, turn the operating lever by 180° and the vehicle is refueled.

The internal coding for pressure range and gas type ensures that the WEH® TK25 H_2 can be connected to the compatible WEH® Receptacles acc. to the opposite table and also prevents the risk of confusion with natural gas.

TK25 H_2 \ TN5 H_2	25 MPa	35 MPa
35 MPa		✓

The WEH® TK25 H_2 offers optimum safety for the operator.
The fueling nozzle remains connected to the receptacle until the gas between inlet valve and receptacle is depressurized.

Application
Fueling nozzle for hydrogen fast filling of buses and trucks at self-service fueling stations.

Technical data

Characteristics	Basic version
Technical nominal size (TNW)	12 mm
Nominal Pressure	PN = 35 MPa
Max. allowable operating Pressure	MAWP = 45 MPa (PS = 450 bar)
Media temperature range	-20 °C up to +85 °C
Ambient temperature range	-40 °C up to +85 °C
Material	Corrosion resistant
Sealing material	Hydrogen resistant
Nozzle type	Type A acc. to SAE J2600:2015 and previous resp. ISO 17268:2012 and previous
Design	With plastic thermal protection and gas recirculation
Weight	Approx. 4.6 kg

Other designs on request

Ordering - WEH® TK25 H₂ Fueling nozzle

approx. dimensions (mm)

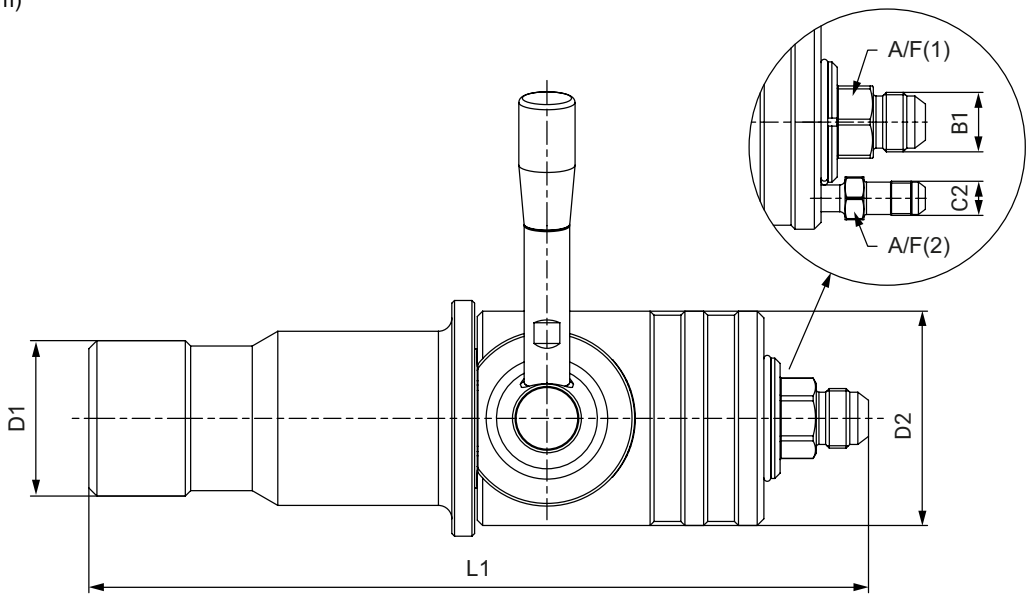

Part No.	Description	Pressure (MAWP)	B1 (male thread)	C2 (male thread)	L1	D1	D2	A/F (1)	A/F (2)
C1-62527-X1-X01	TK25 H₂	45 MPa	UNF 7/8“-14*	UNF 9/16“-18*	305	48	80	27	16

*acc. to SAE J514, 37° cone

Fueling assemblies consisting of fueling nozzle, hose set and breakaway coupling are available on request.

Accessories

The following accessories are available for the WEH® TK₂₅ H₂ Fueling nozzle:

Hose set

Hose set for connecting fueling nozzle and TSA5 H₂ breakaway coupling, complete with filling and venting hose, fittings and press-fittings supported by coil spring stubs. Not suitable for refueling with pre-cooled hydrogen acc. to SAE J2601.

Design filling/venting hose: max. operating pressure PS: 45 MPa / nominal bore for fitting: 5.6 mm (filling hose) resp. 4.5 mm (venting hose) / media temperature range: -20 °C up to +90 °C



Part No.	B1/B2 (female thread)	C1/C2 (female thread)	Hose length
C1-152556	UNF 7/8“-14*	UNF 9/16“-18*	3 m
C1-152557	UNF 7/8“-14*	UNF 9/16“-18*	4 m
C1-152558	UNF 7/8“-14*	UNF 9/16“-18*	5 m

* acc. to SAE JIC, 37° cone

Dispenser mounting

Mounting for safe attachment of the fueling nozzle to the dispenser.

Switch actuated dispenser mounting

approx. dimensions (mm)

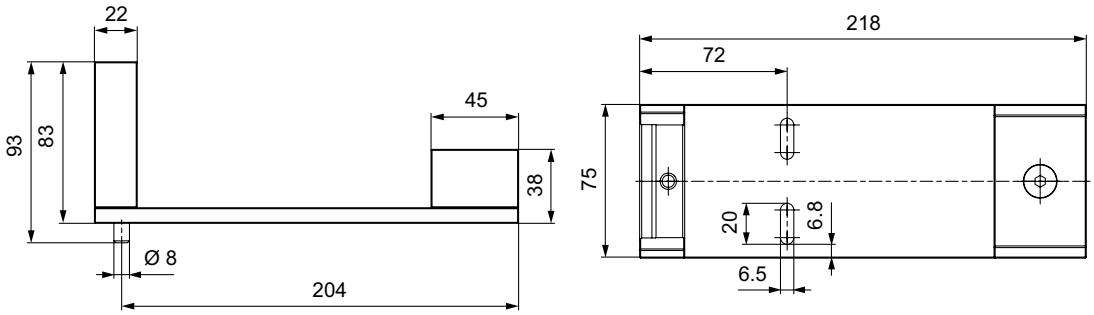

Switch actuated dispenser mounting with weather protection

approx. dimensions (mm)

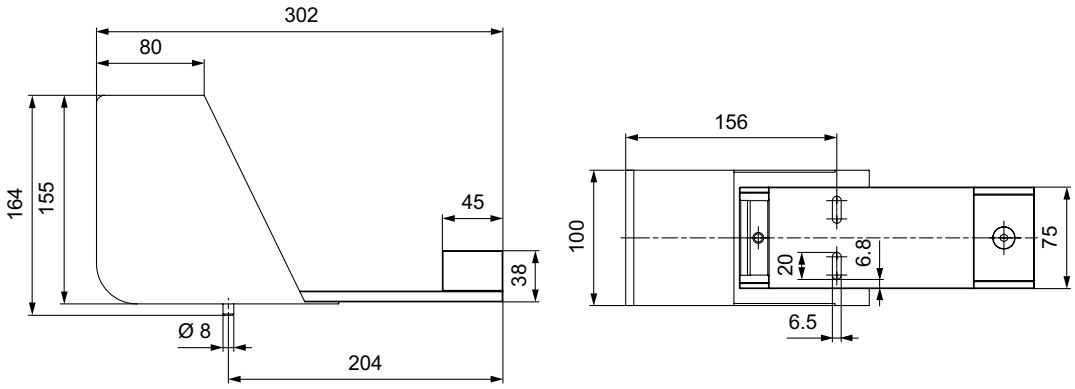



Part No.	Description
C1-83005	Dispenser mounting (switch actuated)
C1-82153	Dispenser mounting (switch actuated) and weather protection

WEH® TNS5 H₂ Service receptacle

To prevent damage in the fueling nozzle while leak testing during maintenance in the course of which pressure is applied, we recommend the use of a service receptacle. The receptacle also protects the fueling nozzle from dirt ingress whilst not in use.



Part no.	Description
C1-157347	TNS5 H₂ Service receptacle incl. protection cap

WEH® Breakaway couplings

For the suitable TSA5 H2breakaway coupling or TSA6 H₂ inline breakaway coupling, please see page 96 resp. 100.

Spare parts

Various parts are available as spares for the WEH® TK25 H_2 Fueling nozzle.



Position	Part No.	Description
1	W6631	Actuation lever
2	E80-397S401	Cover plate
	On request	Maintenance spray

Breakaway coupling

TSA5 H_2

Description

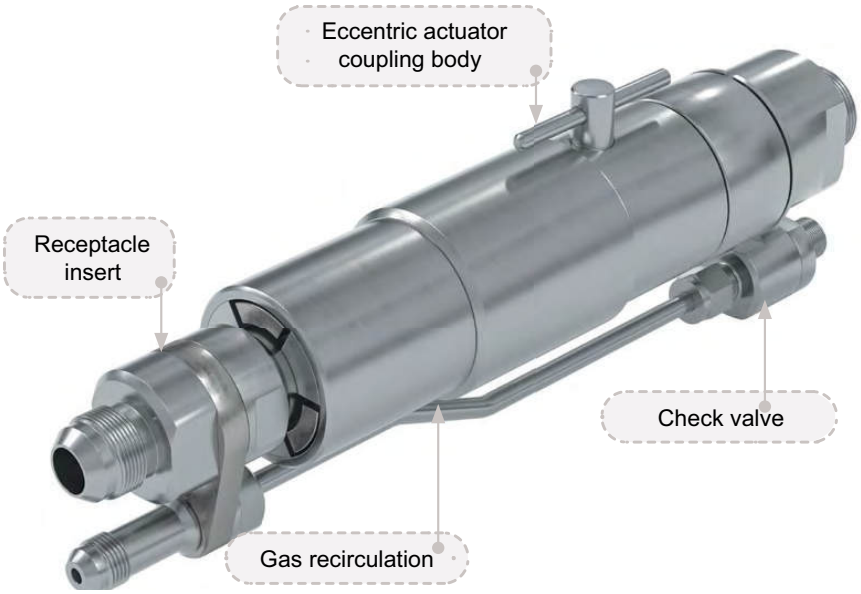

Features
- Reusable without factory servicing
- Installation at the dispenser
- Small compact design
- Integrated cleanable filter (40 µm)
- Check valve at venting line
- No additional tool necessary

The WEH® TSA5 H_2 Breakaway coupling provieds additional safety for your bus and truck fueling station. The breakaway is installed between the dispenser and the filling/venting hose.

In the event of unexpected tensile forces, e.g. a vehicle driving away with a connected fueling nozzle, the breakaway separates the connections between dispenser and hoses in a controlled manner while sealing both ends.
Damage to the vehicule‘s receptacle, the fueling nozzle and the dispenser can thus be prevented as far as possible.
The breakaway coupling can be reused after a functional test.

The integrated filter cleans the hydrogen from dirt ingress and can be cleaned easily and quickly during maintenance.

The WEH® Breakaway coupling consists of a coupling body, a receptacle insert and a gas recirculation with check valve.

On request we also offer fueling assemblies consisting of fueling nozzle, hose set and breakaway coupling.

Application
Breakaway coupling for bus and truck hydrogen fueling stations for direct installation at the dispenser.

Technical data

Characteristics	Basic version
Technical nominal size (TNW)	12 mm
Nominal Pressure	PN = 35 MPa
Max. allowable operating Pressure	MAWP = 45 MPa (PS = 450 bar)
Media temperature range	-20 °C up to +85 °C
Ambient temperature range	-40 °C up to +85 °C
Material	Corrosion resistant stainless steel, aluminum
Sealing material	Hydrogen resistant
Breakaway force	222 - 667 N
Design	With gas recirculation and filter (40 µm)

Other designs on request

Ordering - WEH® TSA5 H_2 Breakaway coupling for TK25 H_2

approx. dimensions (mm)

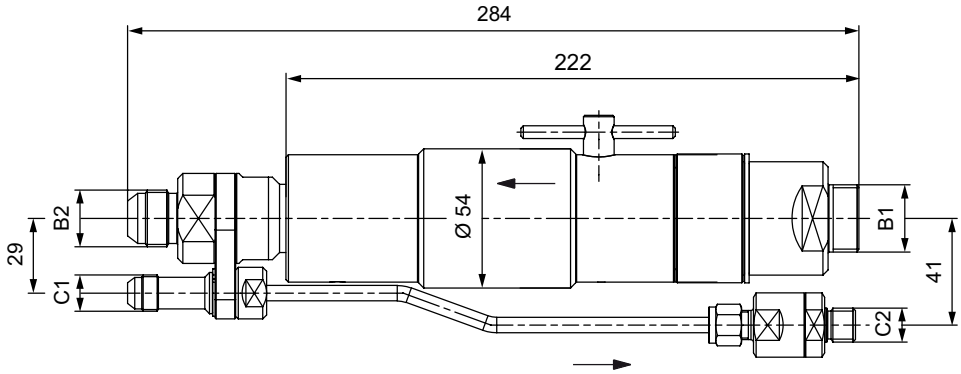



Part No.	Description	TNW	Pressure (MAWP)	B1 (male thread)	B2 (male thread)	C1 (male thread)	C2 (male thread)
C1-17941-X7-X01	TSA5 H_2 with filter (40 µm)	12mm	45 MPa	G3/4“*	UNF 7/8“-14*	UNF 9/16“-18**	G1/4“*

*acc. to DIN EN ISO 228-1
**acc. to SAE J514, 37° cone

Accessories

The following accessories are available for the WEH® TSA₅ H₂ Breakaway coupling:

Dispenser mounting

The breakaway coupling can also be used with a dispenser mounting. The mounting is firmly attached to the dispenser. The integrated guide tube provides a straight pull-off force.

approx. dimensions (mm)

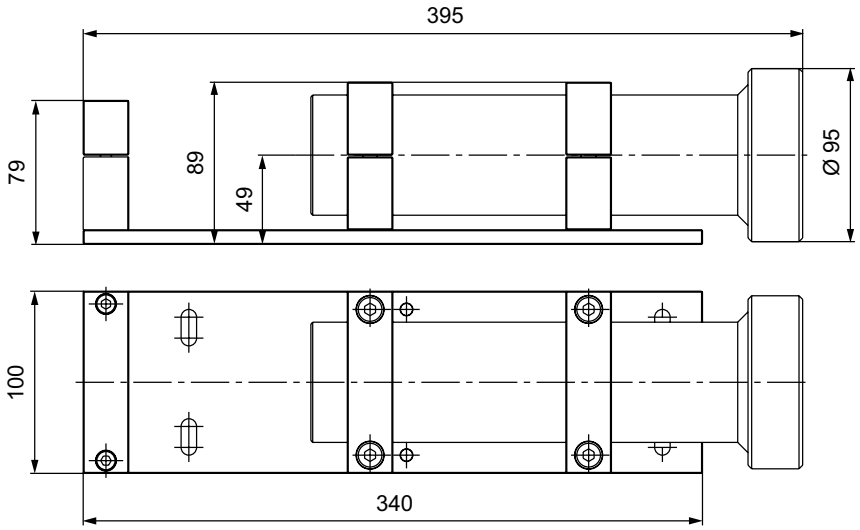



Part No.	Description
C1-82110	Dispenser mounting for TSA₅ H₂

Hoses

Suitable hoses for the TSA5 H₂ breakaway coupling are available on request.

Spare parts

Various parts are available as spares for the WEH® TSA5 H_2 Breakaway coupling.

Part No.	Description
W83706	Receptacle insert for TSA_5 H_2
B200B-119726	Spare seals set for receptacle insert W83706
W139034	Spare parts set consisting of a gas recirculation tube (length: approx. 195 mm) and a firmly mounted check valve
W9062	Wire filter insert 40 µm

Inline breakaway coupling

TSA6 H_2

Description

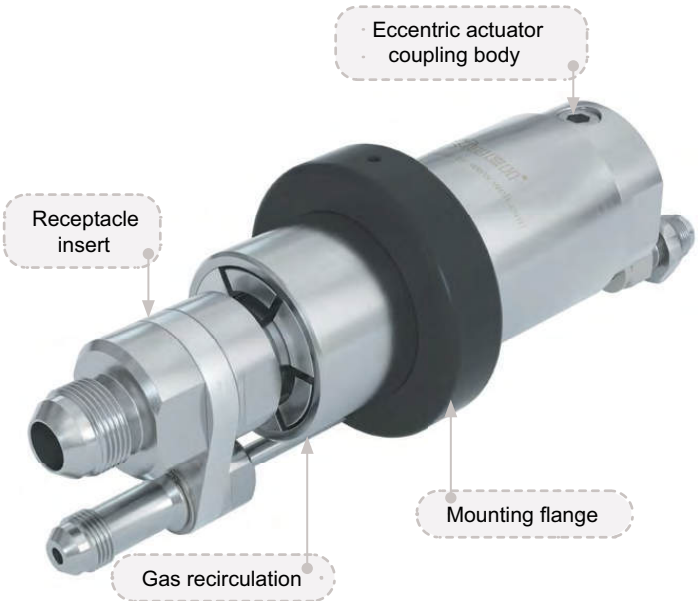

Fetures
- Reusable without factory servicing
- Installation between the filling and venting hoses
- Small compact design
- Mounting flange
- Eccentric actuation via Allen wrench

With the WEH® TSA6 H_2 Breakaway coupling, an inline breakaway coupling is also available for bus and truck refueling stations which is installed between the filling and venting hoses.

In the event of unexpected tensile forces, e.g. a vehicle driving away with a connected fueling nozzle, the breakaway separates the connections between dispenser and hoses in a controlled manner while sealing both ends.
Damage to the vehicule‘s receptacle, the fueling nozzle and the dispenser can thus be prevented as far as possible.
The breakaway coupling can be reused after a functional test.

The WEH® Breakaway coupling consists of a coupling body, a receptacle insert and a gas recirculation.

On request we also offer fueling assemblies consisting of fueling nozzle, hose set and inline breakaway coupling.

Application
Inline breakaway coupling for bus and truck hydrogen fueling stations for installation between the filling and venting hoses.

Technical data

Characteristics	Basic version
Technical nominal size (TNW)	12 mm
Nominal Pressure	PN = 35 MPa
Max. allowable operating Pressure	MAWP = 45 MPa (PS = 450 bar)
Media temperature range	-20 °C up to +85 °C
Ambient temperature range	-40 °C up to +85 °C
Material	Corrosion resistant stainless steel, aluminum
Sealing material	Hydrogen resistant
Breakaway force	222 - 667 N
Design	With gas recirculation

Other designs on request

Ordering - WEH® TSA6 H₂ Inline breakaway coupling for TK25 H₂

approx. dimensions (mm)

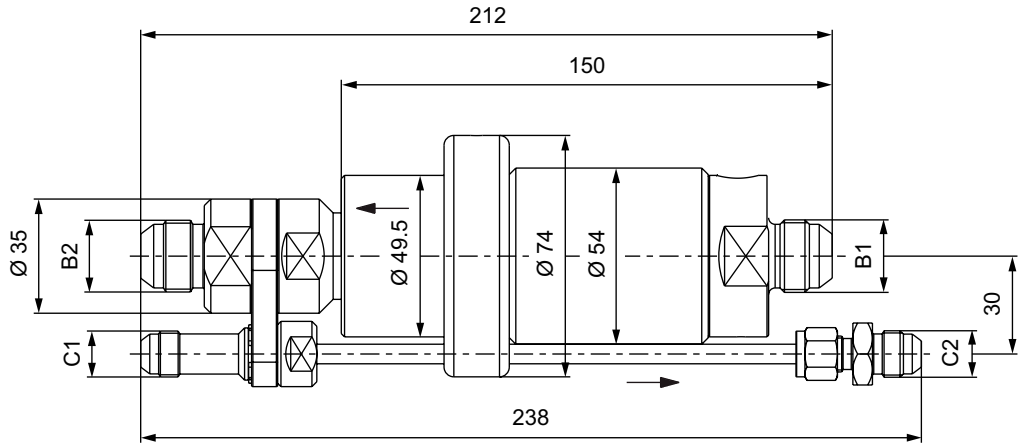



Part No.	Description	TNW	Pressure (MAWP)	B1/B2 (male thread)	C1/C2 (male thread)
C1-82323-X01	TSA6 H₂	12mm	45 MPa	UNF 7/8“-14*	UNF 9/16“-18*

*acc. to SAE J514, 37° cone

Accessories

The following accessories are available for the WEH® TSA₆ H₂ Inline breakaway coupling:

Hoses

Suitable hoses for the TSA6 H₂ inline breakaway coupling are available on request.

Spare parts

Various parts are available as spares for the WEH® TSA6 H₂ Inline breakaway coupling.



Position	Part No.	Description
1	W83706	Receptacle insert for TSA₆ H₂
1	B200B-119726	Spare seals set for receptacle insert W83706
2	W139031	Spare parts set consisting of a mounting flange, a gas recirculation tube and a firmly mounted fitting

Receptacle

TN9-S2- H_2 35 MPa

Description



Features
- High flow rate of up to 90 g/s for fast refueling
- 10-µm metal wire mesh filter, customizable
- Based on TN9-S1 H2 70 MPa which is certified according to ISO 17268:2020
- Low-noise refueling thanks to optimized inner shape
- Seal-friendly design: Robust, durable and easy to maintain
- Coding for pressure range / gas type (acc. to table below)

The WEH® TN9-S2 H_2 35 MPa receptacle was specially developed for refueling road vehicles with hydrogen in the 350 bar pressure range.

The aerodynamically optimized inner shape of the receptacle ensures a virtually silent filling process and guarantees a maximum flow rate of up to 90 g/s. The seal-friendly design effectively protects internal seals from damage and ensures a long service life.

Thanks to its robustness and minimal maintenance requirements, the TN9-S2 H_2 35 MPa is particularly reliable and helps to reduce downtimes. It is also equipped with an integrated check valve and complies with the ISO 17268:2020 certified H70 version.

More safety thanks to integrated self-cleaning particle filter
The integrated filter cartridge with a pore size of 10µm, custom-made for the TN9, offers reliable protection against dirt particles and impurities. Its multi-layer wire mesh enables outstanding filter performance by effectively removing even long fibers and the smallest particles.This filter not only prevents leaks at the receptacle, but also ensures that operation remains safe and reliable even under difficult environmental conditions. The filter can also be flexibly adapted to different degrees of purity to meet your specific requirements.

TK H_2 (Except Tk25 H_2)

TN9-S2 H_2 35 MPa	25 MPa	35 MPa	35 MPa MF*	35 MPa HF**	70 MPa
35 MPa	✓	✓			

*MF = Medium-Flow acc. to ISO 17268-1:2025
**HF = High-Flow acc. to ISO 17268:2012

Application
Receptacle for hydrogen refueling / filling of road vehicles and for industrial applications suitable for WEH® fueling nozzles according to the table above.

Technical data

Characteristics	Basic version
Nominal pressure	PN = 35 MPa
Max. allowable operating pressure	MOP = 43.75 MPa (PS = 437.5 bar)
Temperature range	−40 °C up to +85 °C
Material	Corrosion resistant
Sealing material	Hydrogen resistant
Design	With protection cap, integrated particle filter and integrated check valve
Coding	H35 Grade D gemäß ISO 17268-1:2025
Conformity / Tests / Approvals	TN9-S2 H235 MPa is based on TN9-S1 H_2 70 MPa which is certified according to ISO 17268:2020.

Other designs on request

Ordering - WEH® TN9-S2 H_2 35 MPa Receptacle with double ferrule fitting

approx. dimensions (mm)



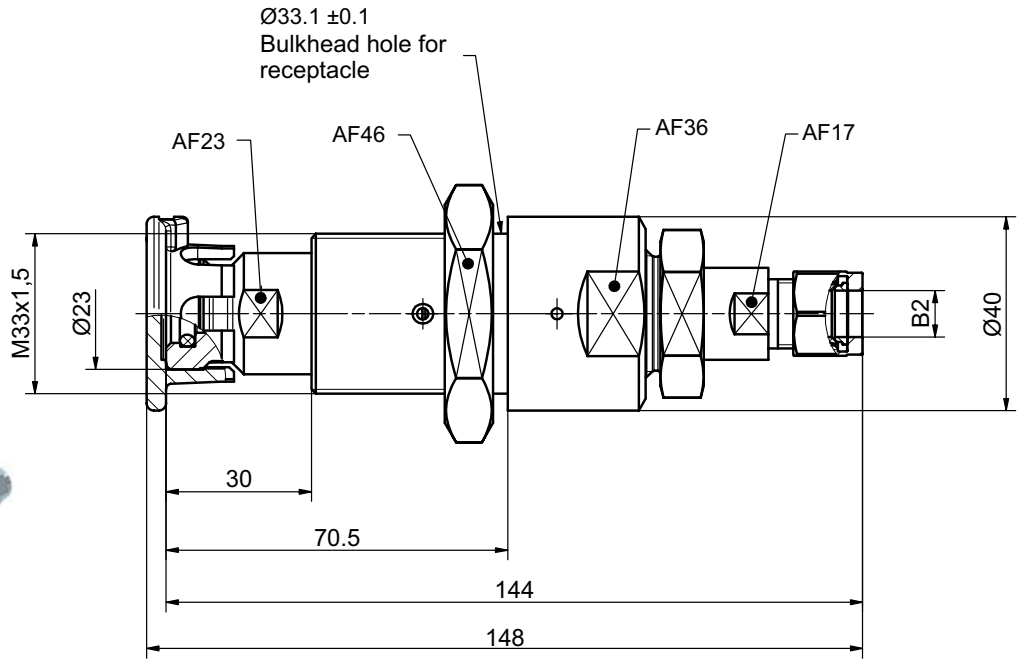

Part No.	Description	Mesh size filtero	Pressure (MOP)	B2
C1-189885	TN9-S2 H_2 35 MPa	10 µm	43.75 MPa	Tube Ø3/8"*

* double ferrule fitting

Accessories

The following accessories are available for the WEH® TN9-S2 H_2 35 MPa Receptacle:

Infrared data interface incl. holder for TN9

Application example:





Part No.	Description
C1-188500	Infrared data interface incl. holder for TN9 (Input signal RS485, output signal J2799 Infrared)
C1-188941	Mounting nut (for IR interface)

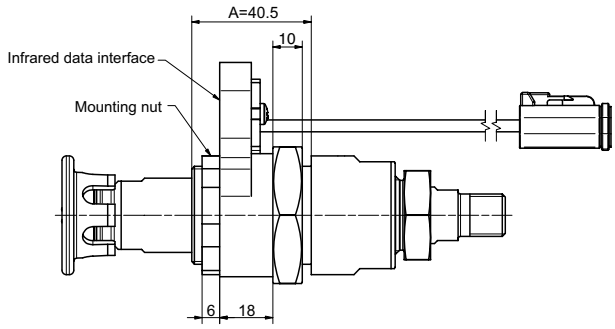

Note: The WEH® receptacle is designed to accommodate an attached data interface in area “A.”
When installing the WEH® receptacle, ensure that the permissible installation space A of 40.5 mm is not exceeded.

Take into account the sheet thickness, nut height, and data interface, including the mounting element.

When using data interface C1-188500 and mounting nut C1-188941, the sheet metal thickness must not exceed 6 mm.

Spare parts

Various parts are available as spares for the WEH® TN9-S2 H_2 35 MPa Receptacle.

Protection cap / Nut

Protection cap with a strap to protect the receptacle from dirt ingress.



Part No.	Description
W85984	Protection cap for receptacles
C1-185122	TN9 Nut M33x1.5 for receptacle mounting

Description



Features
- **High flow rate of up to 120 g/s** for fast refueling
- **10-µm metal wire mesh filter**, customizable
- Based on TN9-S1 H_2 70 MPa which is certified according to ISO 17268:2020
- Low-noise refueling thanks to optimized inner shape
- Seal-friendly design: Robust, durable and easy to maintain
- Coding for pressure range / gas type (acc. to table below)

The WEH® TN9-S3 H_2 35 MPa Medium-Flow receptacle was specially developed for refueling road vehicles with hydrogen in the 350 bar pressure range.

The aerodynamically optimized inner shape of the receptacle ensures a virtually silent filling process and guarantees a maximum flow rate of up to 120 g/s. The seal-friendly design effectively protects internal seals from damage and ensures a long service life.

Thanks to its robustness and minimal maintenance requirements, the TN9-S3 H_2 35 MPa Medium-Flow is particularly reliable and helps to reduce downtimes. It is also equipped with an integrated check valve and complies with the ISO 17268:2020 certified H70 version.

More safety thanks to integrated self-cleaning particle filter
The integrated filter cartridge with a pore size of 10µm, custom-made for the TN9, of fers reliable protection against dirt particles and impurities. Its multi-layer wire mesh enables outstanding filter performance by effectively removing even long fibers and the smallest particles.This filter not only prevents leaks at the recep tacle, but also ensures that operation remains safe and reliable even under difficult environmental conditions. The filter can also be flexibly adapted to different degrees of purity to meet your specific requirements.

TK H_2 (Except Tk25 H_2)

TN9-S3 H_2 35 MPa Medium-Flow	25 MPa	35 MPa	35 MPa MF*	35 MPa HF**	70 MPa
35 MPa	✓	✓	✓	✓	

* MF = Medium-Flow acc. to ISO 17268-1:2025
** HF = High-Flow acc. to ISO 17268:2012

Application
Receptacle for hydrogen refueling / filling of road vehicles and for industrial applica tions suitable for WEH® fueling nozzles according to the table above.

Technical data

Characteristics	Basic version
Nominal pressure	PN = 35 MPa
Max. allowable operating pressure	MOP = 43.75 MPa (PS = 437.5 bar)
Temperature range	−40 °C up to +85 °C
Material	Corrosion resistant
Sealing material	Hydrogen resistant
Design	With protection cap, integrated particle filter and integrated check valve
Coding	H35 Grade D gemäß ISO 17268-1:2025
Conformity / Tests / Approvals	TN9-S3 H_2 35 MPa MF is based on TN9-S1 H_2 70 MPa which is certified according to ISO 17268:2020.

Other designs on request

Ordering - WEH® TN9-S3 $H_2$35 MPa Medium-Flow Receptacle with double ferrule fitting

approx. dimensions (mm)

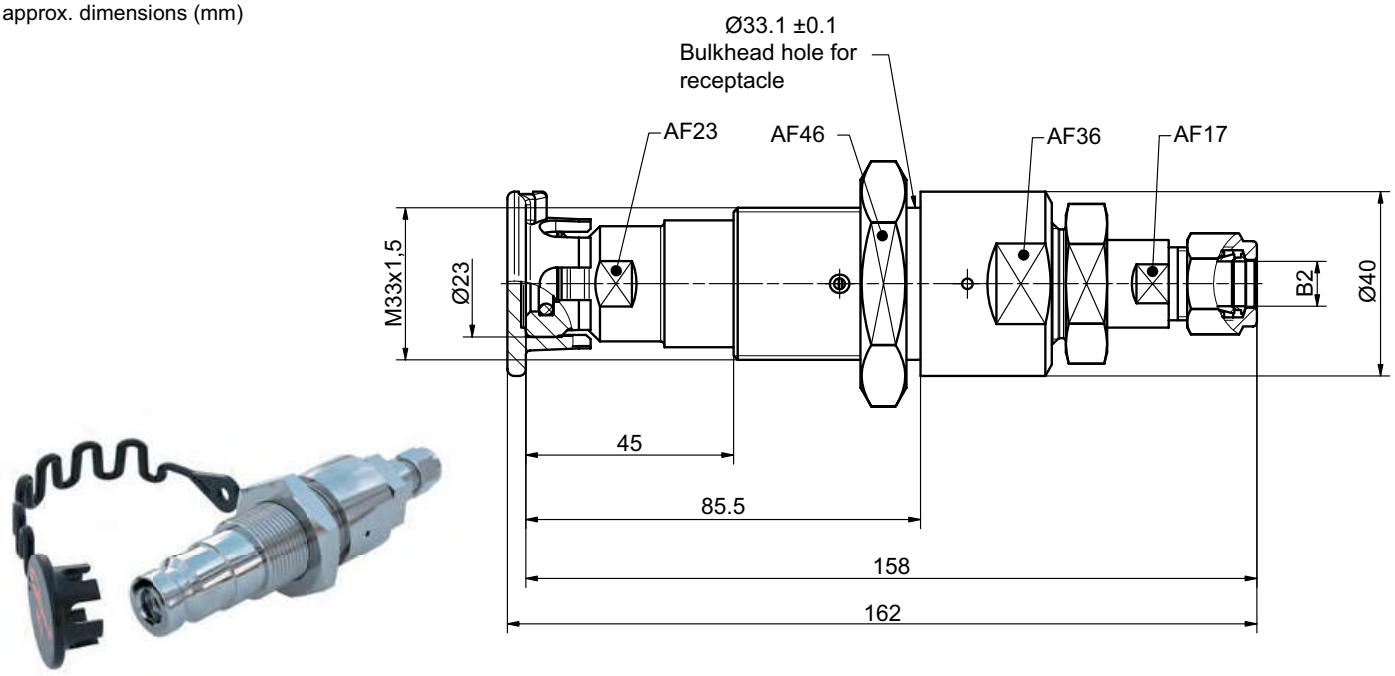

Part No.	Description	Mesh size filter	Pressure (MOP)	B2
C1-189887	TN9-S3 H_2 35 MPa Medium-Flow	10 µm	43.75 MPa	Tube Ø10mm*

* double ferrule fitting

Accessories

The following accessories are available for the WEH® TN9-S3 H_2 35 MPa Medium-Flow Receptacle:

Infrared data interface incl. holder for TN9

Application example:





Part No.	Description
C1-188500	Infrared data interface incl. holder for TN9 (Input signal RS485, output signal J2799 Infrared)
C1-188941	Mounting nut (for IR interface)

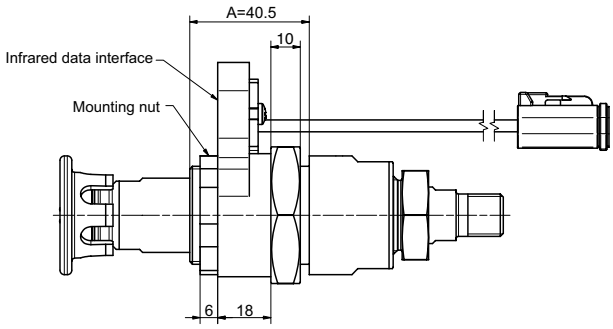

Note: The WEH® receptacle is designed to accommodate an attached data interface in area “A.”
When installing the WEH® receptacle, ensure that the permissible installation space A of 40.5 mm is not exceeded.

Take into account the sheet thickness, nut height, and data interface, including the mounting element.

When using data interface C1-188500 and mounting nut C1-188941, the sheet metal thickness must not exceed 6 mm.

Spare parts

Various parts are available as spares for the WEH® TN9-S3 H_2 35 MPa Medium-Flow Receptacle.

Protection cap / Nut

Protection cap with a strap to protect the receptacle from dirt ingress.



Part No.	Description
W85984	Protection cap for receptacles
C1-185122	TN9 Nut M33x1.5 for receptacle mounting

Description



Features
- Low-noise refueling
- Version with and without integrated self-cleaning particle filter (40 µm or 50 µm)
- Integrated high-flow check valve
- Sealing-friendly design
- Coding for pressure range / gas type (acc. to table below)

The WEH® TN1 H_2 Receptacle was specially designed for refueling cars with hydrogen.
Due to the aerodynamic design of the internal shapes of the receptacle, noise during refueling process is mostly eliminated, while at the same time maximum flow rate is enabled. The internal seals are arranged to largely prevent damage to the sealing components. That is why the WEH® TN1 H_2 proves to be extremely robust and durable, minimizing downtimes due to low maintenance.
The receptacle is equipped with an integrated check valve and has a coding for pressure range / gas type.

Enhanced safety by integrated particle filter
The use of an integrated particle filter prevents the ingress of dirt particles from the outside and therefore leakage at the receptacle is almost eliminated.

Application
Receptacle for hydrogen refueling / filling of cars and fork-lift trucks or other industrial applications, to be used with WEH® Fueling nozzles acc. to opposite table.

TK H_2 (Except TK25 H_2)

TN1 H_2	25 MPa	35 MPa	35 MPa MF*	35 MPa HF**	70 MPa
25 MPa	✓				
35 MPa	✓	✓			

*MF = Medium-Flow acc. to ISO 17268-1:2025
**HF = HF = High-Flow acc. to ISO 17268:2012

Technical data

Characteristics	Basic version
Technical nominal size (TNW)	Depending on design
Nominal Pressure	PN = 25 MPa, 35 MPa
Max. allowable operating Pressure	PS = 35 MPa, 45 MPa
Temperature range	−40 °C a +85 °C
Material	Corrosion resistant
Sealing material	Hydrogen resistant
Coding	Depending on design
Design	With protection cap, with integrated particle filter (40 µm or 50 µm), integrated check valve and fittings (only for receptacles with tube fitting)
Conformity / Tests / Approvals	e1 00 0008 (Regulation (EC) No. 79/2009) Leak tests acc. to SAE J2600:2002 GB/T 26779-2021 (only applies to EC79 articles)

Other designs on request

Ordering - WEH® TN1 H₂ Receptacle with tube fitting and filter (50 µm)

approx. dimensions (mm)



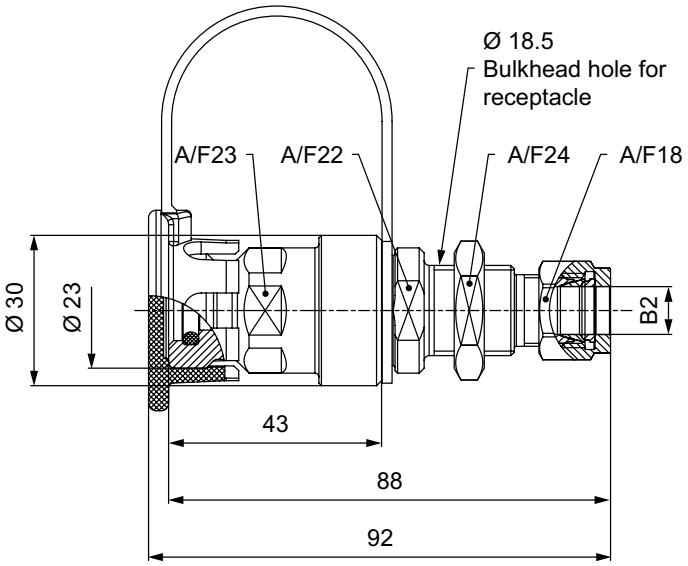

Part No.	Description	Coding	TNW	Pressure (MAWP)	B2
C1-31315-X1-X01	TN1 H₂	H25 acc. to ISO 17268:2012	8 mm	PS = 35 MPa	Tube Ø 3/8“*
C1-31316-X1	TN1 H₂ (EC79)	H35 Grade D acc. to 17268-1:2025	8 mm	MAWP = 45 MPa	Tube Ø 3/8“*
C1-70661-X01	TN1 H₂	H25 acc. to ISO 17268:2012	8 mm	PS = 35 MPa	Tube Ø 10*
C1-35426-X2	TN1 H₂ (EC79)	H35 Grade D acc. to 17268-1:2025	8 mm	MAWP = 45 MPa	Tube Ø 10*

* double ferrule fitting

Ordering - WEH® TN1 H₂ Receptacle prepared for data interface, with filter (40 µm)

approx. dimensions (mm)

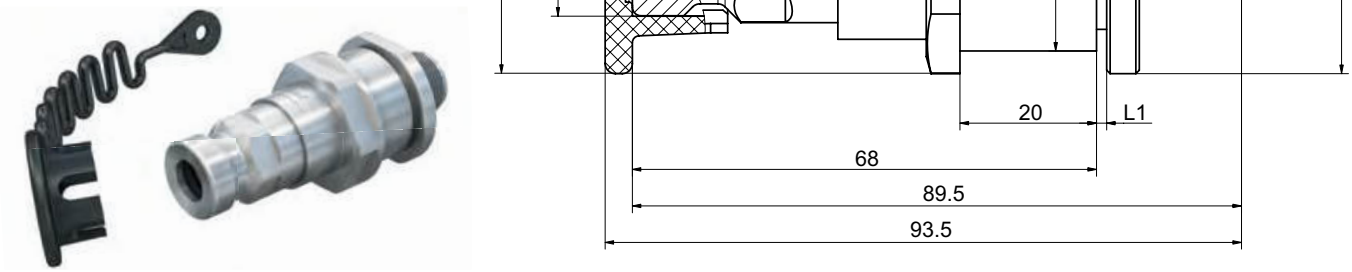

Part No.	Description	Coding	TNW	Pressure (MAWP)	L1	B2 (male thread)
C1-35426-X2	TN1 H₂ (EC79)	H35 Grade D acc. to 17268-1:2025	6 mm	45 MPa	1.5**	UN 11/16“-16 for sealing with O-Lok® Face Seal* or tube Ø 10 (3/8“)

* Face Seal acc. to SAE J1453
** Please indicate when ordering if thicker sheet metals are needed!
Data interface not included!

Other connection sizes and types (e.g. Cone and Thread Fittings or VOSSLok⁴⁰) on request.

Spare parts

Various parts are available as spares for the WEH® TN1 H_2 Receptacle.

Protection cap

Protection cap with a strap to protect the receptacle from dirt ingress.

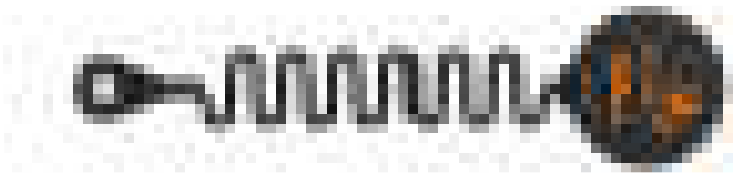

Part No.	Description
W87803	Protection cap
W85984	Protection cap for receptacles prepared for data interface

Description



Features
- Low-noise refueling
- Integrated self-cleaning particle filter (40 µm)
- Integrated high-flow check valve
- Sealing-friendly design
- Coding for pressure range / gas type (acc. to table below)

The WEH® TN1 H_2 High-Flow Receptacle was developed to fit the WEH® TK16 H2 High-Flow Fueling nozzle. This enables buses and trucks to be refueled from now on at car fueling stations.
Refueling is done either with a TK16 H_2 or with a TK16 H2
High-Flow fueling nozzle with increased flow rate. Due to the aerodynamic design of the internal shapes of the receptacle, noise during refueling process is mostly eliminated, while at the same time maximum flow rate is enabled. The internal seals are arranged to largely prevent damage to the sealing components. That is why the WEH® TN1 H_2 High-Flow proves to be extremely robust and durable, minimizing downtimes due to low maintenance.
The receptacle is equipped with an integrated check valve and has a coding for pressure range / gas type.

Enhanced safety by integrated particle filter
The use of an integrated particle filter prevents the ingress of dirt particles from the outside and therefore leakage at the receptacle is almost eliminated.

Application
Receptacle for hydrogen refueling / filling of buses, trucks and fork-lift trucks or other industrial applications, to be used with WEH® Fueling nozzles acc. to opposite table.

TK17 H_2 / TK16 H_2

TN1 H_2 HF*	25 MPa	35 MPa	35 MPa MF*	35 MPa HF*	70 MPa
35 MPa	✓	✓	✓	✓	

*MF = Medium-Flow acc. to ISO 17268-1:2025
**HF = High-Flow acc. to ISO 17268:2012
This coding table applies exclusively to the variants listed below (other variants on request).

Technical data

Characteristics	Basic version
Technical nominal size (TNW)	Depending on design
Nominal Pressure	PN = 35 MPa
Max. allowable operating Pressure	PS (MAWP) = 43.75 MPa
Temperature range	−40 °C up to +85 °C
Material	Corrosion resistant
Sealing material	Hydrogen resistant
Coding	Depending on design
Design	With protection cap, integrated particle filter (40 µm), integrated check valve and fittings (only for receptacles with tube fitting)
Conformity / Tests / Approvals	e1 00 0003 (Regulation (CE) nº 79/2009);

Other designs on request

Ordering - WEH® TN1 H_2 High-Flow Receptacle with tube fitting

approx. dimensions (mm))



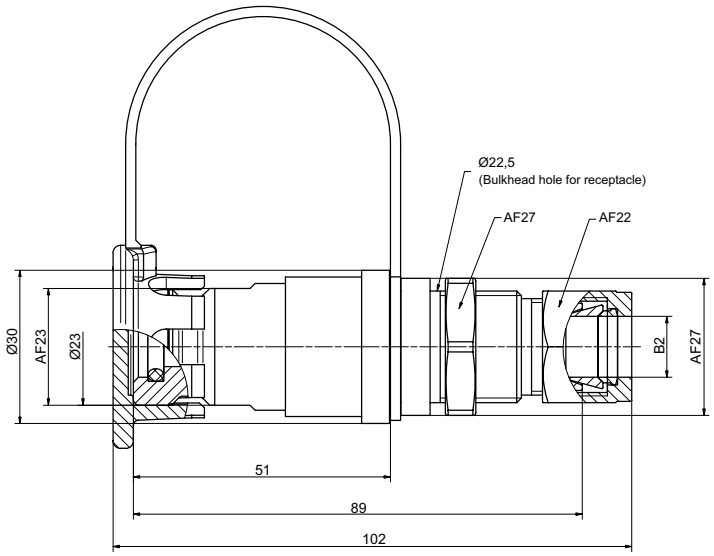

Part No.	Description	Coding	TNW	Pressure (MAWP)	B2
C1-187355	TN1H₂ HighFlow (EC79)	H35Mf Grade D acc. to ISO 17268-1:2025	8mm	43.75 MPa	Tube Ø12*

* double ferrule fitting

Ordering - WEH® TN1 H_2 High-Flow Receptacle with male thread, prepared for data interface

approx. dimensions (mm)



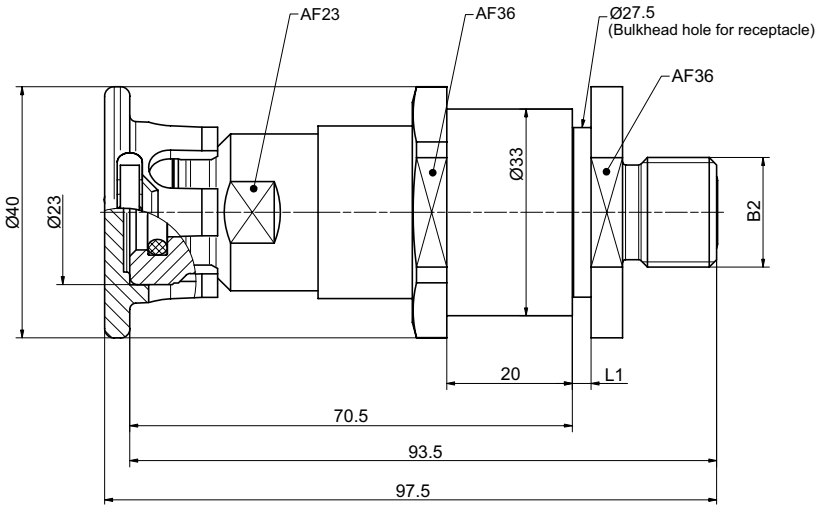

Part No.	Description	Coding	TNW	Pressure (MAWP)	L1	B2 (male thread)
C1-187534	TN1 H_2 High Flow (EC79)	H35MF Grade D acc. to ISO 17268-1:2025	6mm	43.75 MPa	2,5**	UN 11/16"-16 for sealing with O-Lok® Face Seal* for tube Ø 10 (3/8“)

* Face Seal acc. to SAE J1453
** Please indicate when ordering if thicker sheet metals are needed!
Data interface not included!

Ordering - WEH® TN1 H_2 High-Flow Receptacle with male thread, prepared for data interface

approx. dimensions (mm)



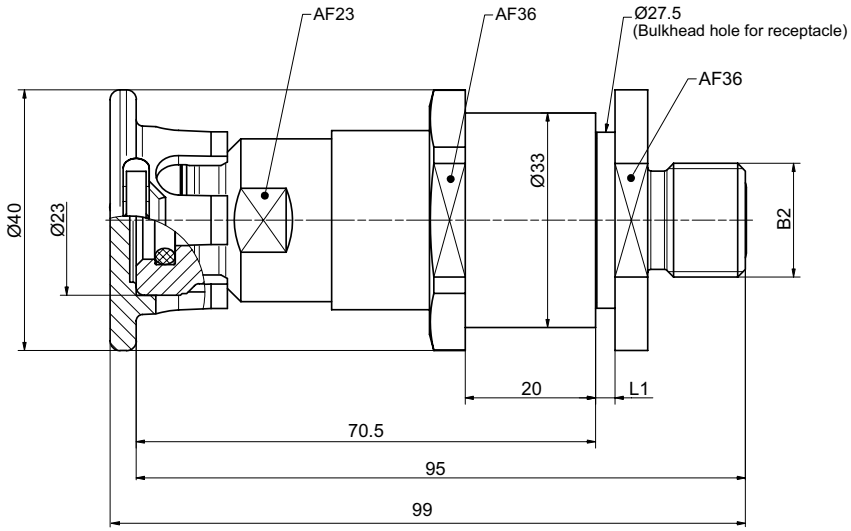

Part No.	Description	Coding	TNW	Pressure (MAWP)	L1	B2 (male thread)
C1-189047	TN1 H_2 High Flow (EC79)	H35MF Grade D acc. to ISO 17268-1:2025	8mm	43.75 MPa	2,5**	UN 13/16“-16 for sealing with O-Lok® Face Seal* for tube Ø 12.7 (1/2“)

* Face Seal acc. to SAE J1453
** Please indicate when ordering if thicker sheet metals are needed!
Data interface not included!

Ordering - WEH® TN1 H₂ High-Flow Receptacle with tube fitting, prepared for data interface

approx. dimensions (mm)



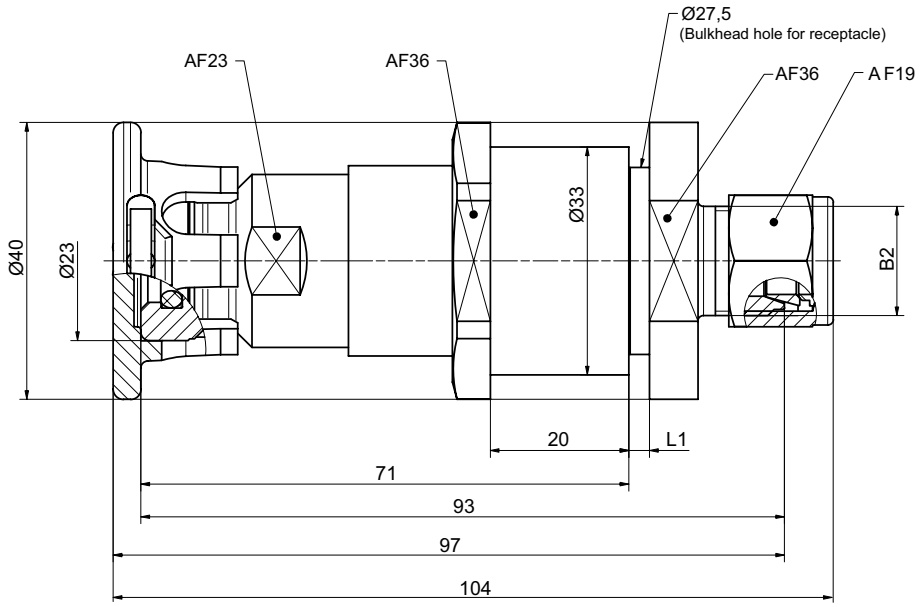

Part No.	Description	Coding	TNW	Pressure (MAWP)	L1	B2 (male thread)
C1-182091	TN1 H₂ High Flow (EC79)	H35Mf Grade D acc. to ISO 17268-1:2025	8mm	43.75 MPa	2,5**	Tube Ø10*

* Face Seal acc. to SAE J1453
** Please indicate when ordering if thicker sheet metals are needed!
Data interface not included!

Other connection sizes and types (e.g. Cone and Thread Fittings or VOSSLok⁴⁰) on request.

Spare parts

Various parts are available as spares for the WEH® TN1 H₂ High-Flow Receptacle.

Protection cap

Protection cap with a strap to protect the receptacle from dirt ingress.



Part No.	Description
W87803	Protection cap
W85984	Protection cap for receptacles prepared for data interface

Receptacle

TN5 H_2

Description



Features
- Low-noise refueling
- Integrated self-cleaning particle filter (50 µm)
- Integrated high-flow check valve
- Sealing-friendly design
- Coding for pressure range / gas type (acc. to table below)

The WEH® TN5 H_2 Receptacle was specially designed for refueling buses and trucks with hydrogen.
Due to the aerodynamic design of the internal shapes of the receptacle, noise during refueling process is mostly eliminated, while at the same time high flow rate is enabled. The internal seals are arranged to largely prevent damage to the sealing components. That is why the WEH® TN5 H_2 proves to be extremely robust and durable, minimizing downtimes due to low maintenance.
The receptacle is equipped with an integrated check valve and has a coding for pressure range / gas type.

Enhanced safety by integrated particle filter
The use of an integrated particle filter prevents the ingress of dirt particles from the outside and therefore leakage at the receptacle is almost eliminated.

Application
Receptacle for hydrogen refueling / filling of buses, trucks and fork-lift trucks or other industrial applications, to be used with WEH® TK25 H_2 Fueling nozzle.

	TK25 H_2	
TN5 H_2	25 MPa	35 MPa
35 MPa	✓	✓

Technical data

Characteristics	Basic version
Technical nominal size (TNW)	Depending on design
Nominal Pressure	PN = 35 MPa
Max. allowable operating Pressure	PS (MAWP) = 45 MPa
Temperature range	−40 °C up to +85 °C
Material	Corrosion resistant
Sealing material	Hydrogen resistant
Design	With protection cap, integrated particle filter (50 µm), integrated check valve and fittings
Conformity / Tests / Approvals	GB/T 26779-2021

Other designs on request

Ordering - WEH® TN5 H₂ Receptacle with tube fitting

approx. dimensions (mm)



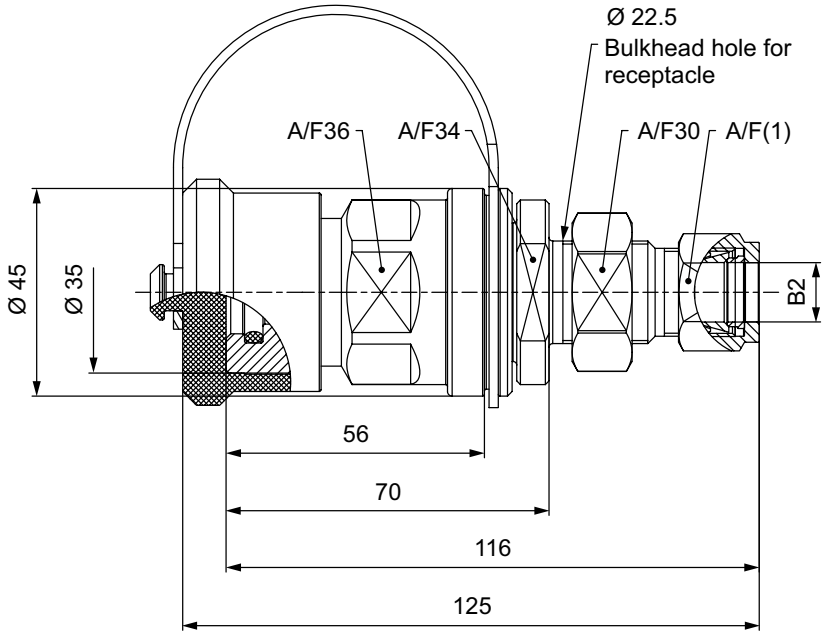

Part No.	Description	TNW	Pressure (MAWP)	B2	A/F (1)
C1-49772-X1-X01	TN5 H₂	10,5 mm	45 MPa	Tube Ø 12*	22
C1-174547	TN5 H₂	10,5 mm	45 MPa	Tube Ø 1/2"*	22
C1-19136-X1-X01	TN5 H₂	12 mm	45 MPa	Tube Ø 16*	25

* double ferrule fitting

Other connection sizes and types (e.g. Cone and Thread Fittings or VOSSLok⁴⁰) on request.

Spare parts

Various parts are available as spares for the WEH® TN5 H₂ Receptacle.

Protection cap

Protection cap with a strap to protect the receptacle from dirt ingress.

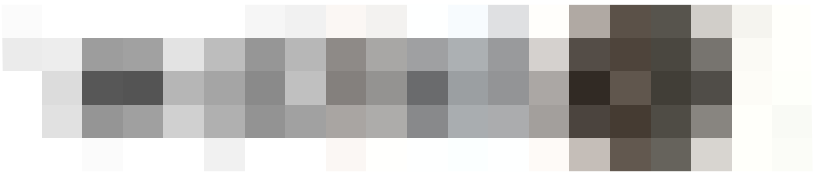

Part No.	Description
E80-134306	Protection cap

Check valve

TVR1 H_2

Descripton



Features
- Robust construction
- Low-noise opening and closing
- Corrosion resistant stainless steel
- High leak tightness

With the TVR1 H_2 WEH offers a high-performance check valve for use with gaseous hydrogen.
The WEH® TVR1 H_2 check valves provide a reliable function wherever hydrogen should only flow in one direction within a pipe system and must be prevented from a return flow.

The seals in the valve are arranged to prevent them from being damaged by dirt particles in the gas flow. The WEH® TVR1 H_2 Check valve is made of corrosion-resistant stainless steel achieving a very durable unit due to its robust internal structure.

Application
Check valve for cars, also suitable for installation in hydrogen fueling stations.
The WEH® TVR1 H_2 product family is offered as a return flow prevention acc. to DIN EN 736-1 for installation in H_2 systems and pipelines.

Technical data

Characteristics	Basic version
Technical nominal size (TNW)	8 mm
Nominal Pressure	PN = 35 MPa
Max. allowable operating Pressure	PS (MAWP) = 45 MPa
Temperature range	−40 °C up to +85 °C
Material	Corrosion resistant stainless steel (inner components partially made of brass: C1-18485/4)
Sealing material	Hydrogen resistant
Design	Incl. fittings (only for check valves with tube fitting) With integrated particle filter on request
Conformity / Tests / Approvals	e1 00 0005 (Regulation (EC) No. 79/2009)

Other designs on request

Ordering- WEH® TVR1 H₂ Check valve with tube fitting on both sides

approx. dimensions (mm)



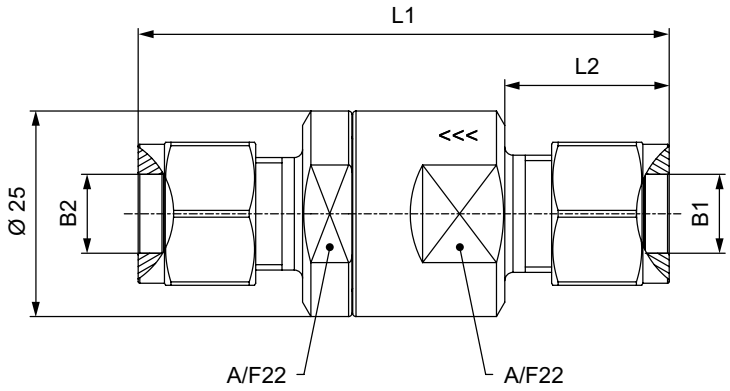

Part No.	Description	TNW	Pressure (MAWP)	B1	B2	L1	L2
On request	TVR1 H₂ (EC79)	8 mm	45 MPa	Tube Ø 3/8"*	Tube Ø 3/8"*	65	20
On request	TVR1 H₂ (EC79)	8 mm	45 MPa	Tube Ø 10*	Tube Ø 10*	65	20

* double ferrule fitting

Other connection sizes and types (e.g. Cone and Thread Fittings or VOSSLok[40]) on request.

Check valve

TVR5 H_2

Description



Features
- Robust construction
- Low-noise opening and closing
- Corrosion resistant stainless steel
- High leak tightness

With the TVR5 H_2 WEH offers a high-performance check valve especially for hydrogen buses and trucks.
The WEH® TVR5 H_2 check valves provide a reliable function wherever hydrogen should only flow in one direction within a pipe system and must be prevented from a return flow.

The seals in the valve are arranged to prevent them from being damaged by dirt particles in the gas flow. The WEH® TVR5 H_2 Check valve is made of corrosion-resistant stainless steel achieving a very durable unit due to its robust internal structure.

Application
Check valve for buses and trucks, also suitable for installation in hydrogen fueling stations.The WEH® TVR5 H_2 product family is offered as a return flow prevention acc. to DIN EN 736-1 for installation in H2 systems and pipelines.

Technical data

Characteristics	Basic version
Technical nominal size (TNW)	Depending on design
Nominal Pressure	PN = 35 MPa
Max. allowable operating Pressure	MAWP = 45 MPa (PS = 450 bar)
Temperature range	−40 °C up to +85 °C
Material	Corrosion resistant stainless steel
Sealing material	Hydrogen resistant
Design	Incl. fittings (only for check valves with tube fitting)
Conformity / Tests / Approvals	On request

Other designs on request

Ordering - WEH® TVR5 H₂ Check valve with tube fitting on both sides

approx. dimensions (mm)



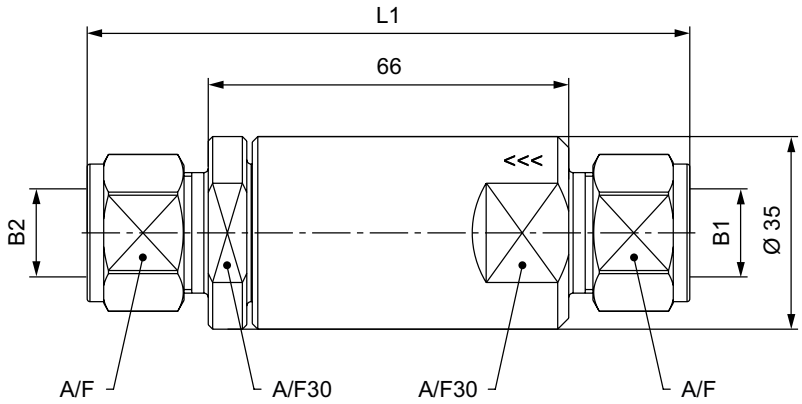

Part No.	Description	TNW	Pressure (PS)	B1	B2	L1	A/F
C1-30216-X1-X01	TVR5 H₂	10,5 mm	45 MPa	Tube Ø 12*	Tube Ø 12*	110	20
C1-30215-X1-X01	TVR5 H₂	14 mm	45 MPa	Tube Ø 16*	Tube Ø 16*	111	25

* double ferrule fitting

Other connection sizes and types (e.g. Cone and Thread Fittings or VOSSLok[40]) on request.

Description



Features
- For clean filtered hydrogen
- Filter insert can be cleaned
- For installation onboard H_2 vehicles and in H_2 fueling stations
- Also suitable as prefilter for inline breakaway couplings

When refueling hydrogen, it can often happen that hydrogen with dirt particles is fueled. These contaminated particles in the gas may cause damage to the sealing components. WEH therefore offers the WEH® TSF2 Filter for clean filtered hydrogen. Solid particles are reliably captured.
The filter element can be removed and can be reused after cleaning.

The WEH® TSF2 H_2 Filter is mainly used in fueling stations and plants.
To meet the different requirements of dispenser manufacturers, a wide variety of connection configurations are available - tube fitting / female thread on both ends or female and male thread.

For use as a prefilter with WEH® TSA2 H_2 Inline breakaway coupling, WEH offers a special design with male and female thread.

Application
Filter for installation in hydrogen vehicles and fueling stations.

Technical data

Characteristics	Basic version
Technical nominal size (TNW)	Depending on design
Nominal pressure	PN = 35 MPa
Max. allowable operating pressure	MAWP = 45 MPa (PS = 450 bar)
Temperature range	−40 °C up to +85 °C
Material	Corrosion resistant stainless steel
Sealing material	Hydrogen resistant
Filter element	40 µm or 20 µm
Design	Incl. fittings (only for filters with tube fitting)
Conformity / Tests / Approvals	On request

Other designs on request

Ordering - WEH® TSF2 H₂ Filter with tube fitting on both sides

approx. dimensions (mm)



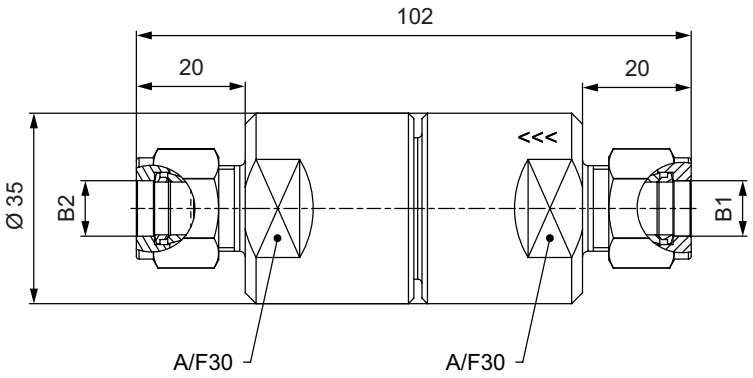

Part No.	Description	Filter (µm)	TNW	Pressure (MAWP)	B1	B2
C1-18487-X01	TSF2 H₂	40	8 mm	45 MPa	Tube Ø 3/8"*	Tube Ø 3/8"*
C1-36033-X01	TSF2 H₂	40	8 mm	45 MPa	Tube Ø 10*	Tube Ø 10*

* double ferrule fitting

Ordering - WEH® TSF2 H₂ Filter with female thread on both sides

approx. dimensions (mm)



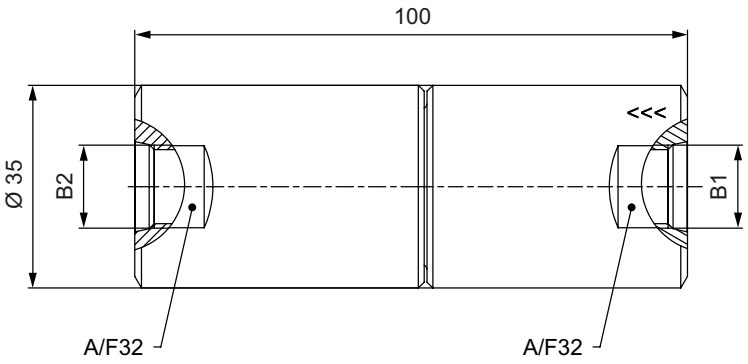

Part No.	Description	Filter (µm)	TNW	Pressure (MAWP)	B1 (female thread)	B2 (female thread)
C1-34576-X01	TSF2 H₂	40	8 mm	45 MPa	UNF 9/16"-18*	UNF 9/16"-18*

* acc. to SAE J1926-1

Ordering - WEH® TSF2 H_2 Filter with male and female thread (also suitable as prefilter for TSA2 H_2))

approx. dimensions (mm)



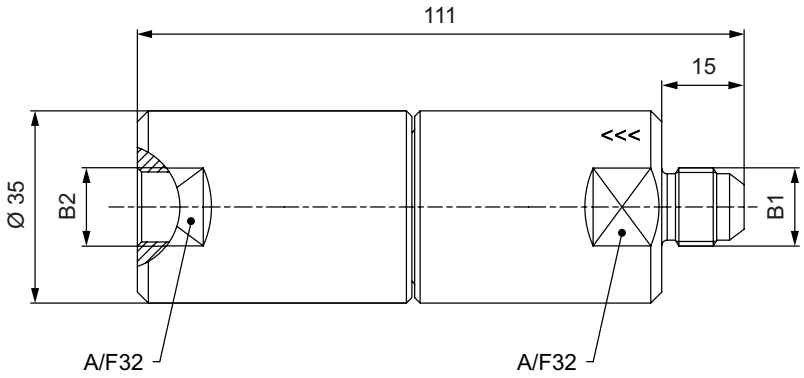

Part No.	Description	Filter (µm)	TNW	Pressure (MAWP)	B1 (male thread)	B2 (female thread)
C1-134710-X01	TSF_2 H_2	40	8 mm	45 MPa	UNF 9/16“-18*	UNF 9/16“-18*
C1-134711-X01	TSF_2 H_2	20	8 mm	45 MPa	UNF 9/16“-18*	UNF 9/16“-18*

* acc. to SAE J514, 37° cone

Other connection sizes and types (e.g. Cone and Thread Fittings or VOSSLok[40]) on request.

Spare parts

Various parts are available as spares for the WEH® TSF2 H_2 Filter.

Part No.	Description
E69-9061	Wire filter insert 40 µm (incl. spring and o-ring)
W67754	Wire filter insert 20 µm (incl. spring and o-ring)

Coalescing filter

TSF2 H_2

Description



Features
- Fine filter with high particle retention capacity (efficiency of approx. 99.9 % > 0.3 µm)
- Operating pressure (PS) up to 490 bar
- For installation in H2 vehicles and fueling stations
- Protection of critical components in the fuel system
- Wear resistant and corrosion resistant
- Ease of maintenance

When refueling with hydrogen, clean, filtered gases are a basic prerequisite for the proper functioning of the vehicle and fueling station components. The WEH® TSF2 H_2 coalescence filter cleans the gas flow of contaminants.

Coalescence filters are even more effective than normal particle filters due to their high particle retention capacity. more effective. The TSF2 H_2 filters the gas flow and reliably and safely removes the contaminants contained in the gas, such as oil, water aerosols and dirt particles. These impurities are separated by the coalescence filter. The hydrogen flows through the filter, whereby the slower-flowing components such as oil, water and other liquid aerosols form droplets, sink to the bottom of the filter and can be removed via the oil outlet.

The WEH® TSF2 H_2 is easy to maintain and can also be retrofitted in vehicles and fueling stations.

Application
Coalescence filters for installation in hydrogen vehicles and fueling stations.

Techincal data

Characteristics	Basic version
Technical nominal size (TNW)	8 mm
Nominal pressure	PN = 35 MPa
Max. allowable operating pressure	PS (MAWP) according to design
Temperature range	−40 °C a +85 °C
Material	Corrosion resistant
Sealing material	Hydrogen resistant
Filter element	< 0,3 µm
Design	Inclui plug
Conformity / Tests / Approvals	e1 00 0004 (Regulation (EC) No. 79/2009)

Other designs on reques

Ordering - Coalescing filter WEH® TSF2 H₂ with filter cartridge Ø 38 mm

approx. dimensions (mm)

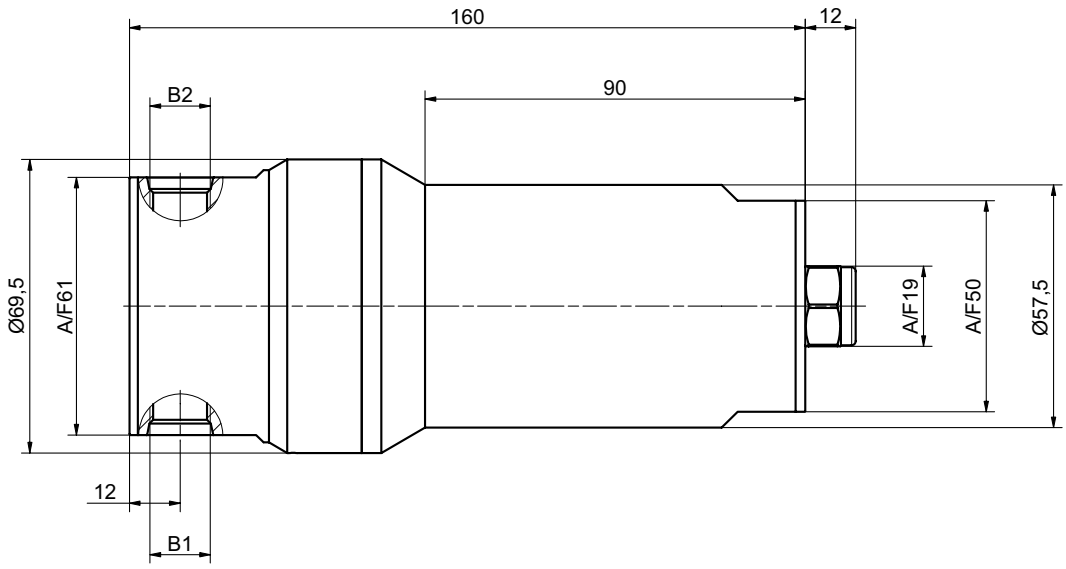

Part No.	Description	Pressure (MAWP)	B1 (female thread)	B2 (female thread)
C1-181946	TSF2 H₂ (EG79)	43.75 MPa	UNF 9/16“-18*	UNF 9/16“-18*
C1-181949	TSF2 H₂	49 MPa	UNF 9/16“-18*	UNF 9/16“-18*

* according to SAE J1926-1

Other connections (e.g. Cone and Thread Fittings or VOSSLok40) on request.

Spare parts / Accessories

Various spare parts are available for the WEH® TSF2 H₂ coalescence filter.

Plug

Plug with matching O-ring (made of polyurethane) to close the oil outlet “Q” (filter end).



Part No.	Description	Connection (male thread)
E69-93336	Plug with O-Ring	UNF 9/16“-18*

Spare parts set
Suitable for coalescence filter TSF2 H₂

Part No.	Description
B200B-168192	Spare parts set consisting of filter cartridge Ø 38 mm, support ring and 2 O-rings

Screw-in fittings for connections B1/B2

Part No.	Description
E69-135408	Swagelok UNF 9/16*-18* AG RV Ø10mm
B200B-168192	Swagelok UNF 9/16*-18* AG RV Ø8mm

* according to SAE J1926-1 / Tightening torque 45 Nm + 10%

Description



Features
- For clean filtered hydrogen
- Filter insert can be cleaned
- For installation onboard H_2 vehicles and in H_2 fueling stations

When refueling hydrogen, it can often happen that hydrogen with dirt particles is fueled. These contaminated particles in the gas may cause damage to the sealing components. WEH therefore offers the WEH® TSF4 H_2 Filter for clean filtered hydrogen. Solid particles are reliably captured.
The filter element can be removed and can be reused after cleaning.

The particle filter is specially designed for installation in vehicles, but can also be installed in fueling stations and plants, depending on the application.

Application
Filter for installation in hydrogen vehicles and fueling stations.

Technical data

Characteristics	Basic version
Technical nominal size (TNW)	10 mm
Nominal pressure	PN = 35 MPa
Max. allowable operating pressure	According to design
Temperature range	−40 °C up to +85 °C
Material	Corrosion resistant stainless steel
Sealing material	Hydrogen resistant
Filter element	10 µm
Design	Incl. fittings (only for filters with tube fitting)
Conformity / Tests / Approvals	On request

Other designs on request

Ordering - WEH® TSF4 H₂ T-Filter with tube fitting on both sides

approx. dimensions (mm)



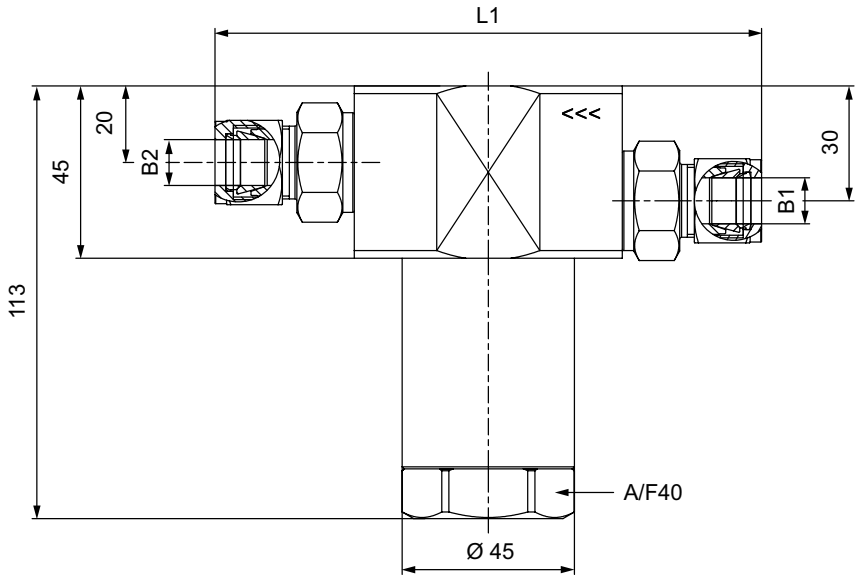

Part No.	Description	Filter (µm)	TNW	Pressure (MAWP)	B1	B2	L1
C1-58026-X01	TSF4 H₂	10	10 mm	45 MPa	Tube Ø 12*	Tube Ø 12*	145
C1-73987-X01	TSF4 H₂	10	10 mm	35 MPa	Tube Ø 1/2"*	Tube Ø 1/2"*	145

* double ferrule fitting

Other connection sizes and types (e.g. Cone and Thread Fittings or VOSSLok[40]) on request.

Spare parts

Various parts are available as spares for the WEH® TSF4 H₂ Filter.

Part No.	Description
W9063	Wire filter insert 10 µm
E51-47589	O-ring for filter insert (only T-filter)

Defueling nozzle

TK6 H_2

Description

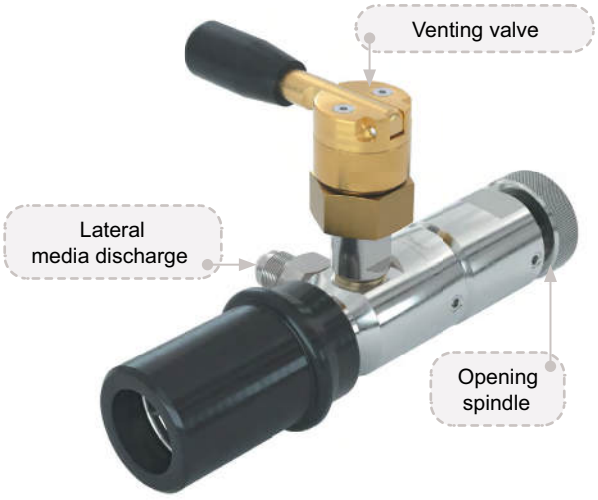

Features
- Discharge via filling port
- Actuation with opening spindle
- With venting valve (optionally also without venting valve)
- No additional shut-off device required
- Plastic thermal protection on vehicle-side connection
- Only suitable for WEH® TN1 H2 Receptacles without filter

The WEH® TK6 H_2 Defueling nozzle is used for maintenance and inspection of hydrogen vehicles.
For maintenance, all pressure or fuel tanks must be discharged. WEH has designed the TK6 H_2 for easy connection and discharging of the hydrogen tanks.

The defueling nozzle is simply placed onto the receptacle in the car and the knurled spindle is screwed in until it stops.
Then, the WEH® TN1 H_2 Receptacle is opened and the fuel tanks can be discharged via the lateral media discharge.

Application
Defueling nozzle for discharging hydrogen fuel tanks of cars via filling receptacle, only to be used with WEH® TN1 H_2

Receptacles without filter. Operation only by specially trained personnel. Not for self-service operation!
Attention: The TK6 H_2 may not be used for filling!

Technical data

Characteristics	Basic version
Technical nominal size (TNW)	6 mm
Nominal pressure	PN = 35 MPa
Max. allowable operating pressure	PS = 45 MPa
Media temperature range	-20 °C up tp +85 °C
Ambient temperature range	-40 °C up to +85 °C
Material	Corrosion resistant
Sealing material	Hydrogen resistant
Design	With plastic thermal protection on vehicle-side connection, opening spindle and venting valve
Weight	Approx. 1.2 kg

Other designs on request

Ordering - WEH® TK6 H_2 Defueling nozzle with venting valve

approx. dimensions (mm)

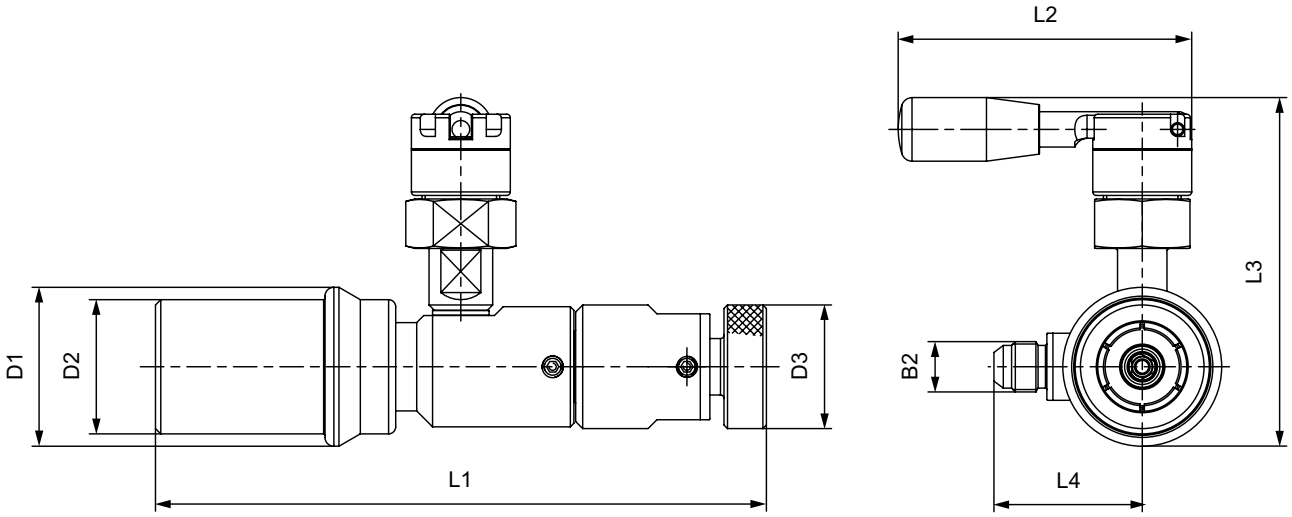

Part No.	Description	Pressure (MAWP)	B2 (male thread)	L1	L2	L3	L4	D1	D2	D3
C1-104732-X01	TK6 H_2	45 MPa	UNF 9/16“-18*	min. 173 / max. 180	83	99	42	45	38	35

* acc. to SAE J514, 37° cone

Accessories

The following accessories are available for the WEH® TK6 H_2 Defueling nozzle:

Pressure hose

Pressure hose for connection to the defueling nozzle, complete with fittings and press-fittings supported by coil spring stubs.

Not suitable for refueling with pre-cooled hydrogen acc. to SAE J2601.

Design hose: max. operating pressure PS: 45 MPa / nominal bore for fitting: 4.5 mm / media temperature range: -20 °C up to +90 °C



Part No.	B1/B2 (female thread)	Hose length
E68-60809	UNF 9/16“-18*	3 m
E68-60812	UNF 9/16“-18*	4 m
E68-60813	UNF 9/16“-18*	5 m

* acc. to SAE JIC, 37° cone

WEH® TN1 H_2 Receptacle with tube fitting, without filter

approx. dimensions (mm)



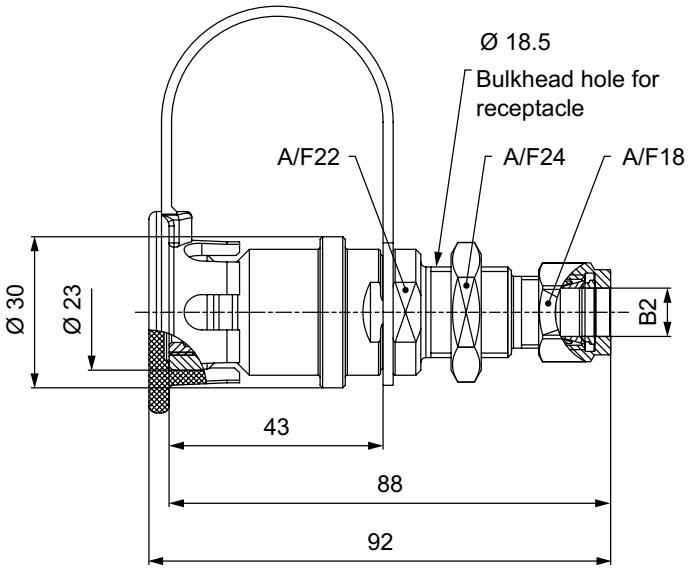

Part No.	Description	TNW	Pressure (MAWP)	B1
C1-18481/4-X01	TN1 H_2	8 mm	43,75 MPa	Tube Ø 3/8"*
C1-32456-X01	TN1 H2 (EC79)	8 mm	43,75 MPa	Tube Ø 10*

* double ferrule fitting

WEH® TNS1 H_2 Service receptacle

To prevent damage in the defueling nozzle while leak testing during maintenance in the course of which pressure is applied, we recommend the use of a service receptacle. The receptacle also protects the defueling nozzle from dirt ingress whilst not in use.



Part no.	Description
C1-157639	TNS_1 H_2 Service receptacle incl. protection cap

Spare parts

Various parts are available as spares for the WEH® TK6 H_2 Defueling nozzle.



Position	Part no.	Description
1	E80-111760	Sliding sleeve
	On request	Maintenance spray

Description



Features
- Different lengths available
- Tailor-made according to customers‘ specifications

We offer hydrogen hoses for connecting our fueling nozzles to the breakaway coupling or fueling station. The hoses are available with suitable fittings. The hoses or hose sets can be delivered in different standard sizes. On request the hydrogen hoses are also available in other lengths.

Application
Hydrogen hoses / hose sets for installation at the fueling station.

Technical data

Characteristics	Basic version
Max. allowable operating pressure PS	45 MPa (hoses for TK16 H_2, TK16 H_2 High Flow, TK25 H_2, TK6 H_2) 49 MPa (hoses for TK20-S2 $H_2$35 MPa) 87,5 MPa (hoses for TK20-S1 $H_2$70 MPa)
Media temperature range	-20 °C up to +90 °C* (hoses for TK16 H_2, TK16 H_2 High Flow, TK25 H_2, TK6 H_2) -40 °C up to +85 °C (hoses for TK20-S1 H_2 70 MPa, TK20-S1 $H_2$35 MPa)
Ambient temperature range	-40 °C up to +85 °C
Sealing material	Hydrogen resistant

* not suitable for refueling with pre-cooled hydrogen acc. to SAE J2601

Ordering - Hose set for TK20-S1 H_2 70 MPa

Hose set for connecting fueling nozzle and TSA30-S1 H_2 70 MPa breakaway coupling, complete with filling hose and braided protection hose as cover.

Design filling hose:
max. operating pressure PS: 96.25 MPa / nominal bore at fitting: 4.5 mm / media temperature range: -40 °C up to +85 °C



Part no.	B1/B2 (female thread)	Hose length
C1-189992	UNF 9/16“-18*	3 m
C1-189993	UNF 9/16“-18*	4 m
C1-189994	UNF 9/16“-18*	5 m

* DKJ 58°

Ordering - Hose set for TK20-S1 H₂ 70 MPa ENR

Hose set for connecting fueling nozzle and TSA30-S1 H2 70 MPa breakaway coupling, complete with filling hose and braided protection hose as cover.

Design filling hose:
max. operating pressure PS: 96.25 MPa / nominal bore at fitting: 4.5 mm / media temperature range: -40 °C up to +85 °C



Part no.	B1/B2 (female thread)	P1/P2	Hose length
E68-161886	UNF 9/16“-18*	Ø 6	3 m
E68-161887	UNF 9/16“-18*	Ø 6	4 m
E68-161888	UNF 9/16“-18*	Ø 6	5 m

* DKJ 58°

Ordering - Hose set for TK20-S2 H₂ 35 MPa

Hose set for connecting fueling nozzle and TSA30-S1 H₂ breakaway coupling, complete with filling hose, data cable, pur ging line and braided protection hose as cover.

Design filling hose:
max. operating pressure PS: 49 MPa / nominal bore at fitting: 4.5 mm / media temperature range: -40 °C up to +85 °C



Part no.	B1/B2 (female thread)	Hose length
C1-189989	UNF 7/16“-20*	3 m
C1-189990	UNF 7/16“-20*	4 m
C1-189991	UNF 7/16“-20*	5 m

* acc. to SAE JIC, 37° sealing cone

Ordering - Hose set for TK20-S2 H₂ 35 MPa ENR

Hose set for connecting fueling nozzle and TSA1 H₂ breakaway coupling, complete with filling hose and braided protection hose as cover.

Design filling hose:
max. operating pressure PS: 49 MPa / nominal bore at fitting: 4.5 mm / media temperature range: -40 °C up to +85 °C



Part no.	B1/B2 (female thread)	P1/P2	Hose length
E68-174299	UNF 7/16“-20*	Ø 6	3 m
E68-174300	UNF 7/16“-20*	Ø 6	4 m
E68-174301	UNF 7/16“-20*	Ø 6	5 m

* acc. to SAE JIC, 37° sealing cone

Ordering - Hose set for TK20-S3 H₂ 35 MPa Medium Flow

Hose set for connecting fueling nozzle and TSA30-S1 H₂ breakaway coupling, complete with filling hose, data cable, purging line and braided protection hose as cover.

Design filling hose:
max. operating pressure PS: 49 MPa / nominal bore at fitting: 4.5 mm / media temperature range: -40 °C up to +85 °C



Part no.	B1/B2 (female thread)	P1/P2	Hose length
C1-189989	UNF 7/16“-20*	Ø 6	3 m
C1-189990	UNF 7/16“-20*	Ø 6	4 m
C1-189991	UNF 7/16“-20*	Ø 6	5 m

* acc. to SAE JIC, 37° sealing cone

Ordering - Hose set for TK20-S3 H₂ 35 MPa ENR Medium-Flow

Hose set for connecting fueling nozzle and TSA1 H₂ breakaway coupling, complete with filling hose, data cable, purging line and braided protection hose as cover.

Design filling hose:
max. operating pressure PS: 49 MPa / nominal bore at fitting: 4.5 mm / media temperature range: -40 °C up to +85 °C



Part no.	B1/B2 (female thread)	P1/P2	Hose length
E68-174299	UNF 7/16“-20*	Ø 6	3 m
E68-174300	UNF 7/16“-20*	Ø 6	4 m
E68-174301	UNF 7/16“-20*	Ø 6	5 m

* acc. to SAE JIC, 37° sealing cone

Ordering - Hose set for TK16 H₂ 35 MPa and TK16 H₂ High-Flow 35 MPa

Hose set for connecting fueling nozzle and TSA1 H₂ breakaway coupling, complete with filling and venting hose, fittings and press-fittings supported by coil spring stubs. Not suitable for refueling with pre-cooled hydrogen acc. to SAE J2601.

Design filling/venting hose:
max. operating pressure PS: 45 MPa / nominal bore at fitting: 4.5 mm / media temperature range: -20 °C up to +90 °C



Part No.	B1/B2 (female thread)	C1/C2 (female thread)	Hose length
C1-60917	UNF 9/16“-18*	UNF 7/16“-20*	3 m
C1-60920	UNF 9/16“-18*	UNF 7/16“-20*	4 m
C1-60923	UNF 9/16“-18*	UNF 7/16“-20*	5 m

* acc. to SAE JIC, 37° cone

Ordering - Hose set for TK16 H₂ (35 MPa) and TK16 H₂ High-Flow (35 MPa) with data interface

Hose set for connecting fueling nozzle and TSA1 H₂ breakaway coupling, complete with filling and venting hose, hose fittings, plastic spiral hose and cable for data interface.
Not suitable for refueling with pre-cooled hydrogen acc. to SAE J2601.

Design filling/venting hose: max. operating pressure PS: 45 MPa / nominal bore at fitting: 4.5 mm (filling hose) resp. 2 mm (venting hose) / media temperature range: -20 °C up to +90 °C



Part No.	B1/B2 (female thread)	C1/C2 (female thread)	Hose length
C1-90698	UNF 9/16“-18*	M12x1.5	3 m
C1-94428	UNF 9/16“-18*	M12x1.5	4 m
C1-94429	UNF 9/16“-18*	M12x1.5	5 m

* acc. to SAE JIC, 37° cone

Ordering - Hose set for TK25 H₂ (25 MPa / 35 MPa)

Hose set for connecting fueling nozzle and TSA5 H₂ breakaway coupling, complete with filling and venting hose, fittings and press-fittings supported by coil spring stubs. Not suitable for refueling with pre-cooled hydrogen acc. to SAE J2601.

Design filling/venting hose: max. operating pressure PS: 45 MPa / nominal bore at fitting: 5.6 mm (filling hose) resp. 4.5 mm (venting hose) / media temperature range: -20 °C up to +90 °C



Part No.	B1/B2 (female thread)	C1/C2 (female thread)	Hose length
C1-152556	UNF 7/8“-14*	UNF 9/16“-18*	3 m
C1-152557	UNF 7/8“-14*	UNF 9/16“-18*	4 m
C1-152558	UNF 7/8“-14*	UNF 9/16“-18*	5 m

* acc. to SAE JIC, 37° cone

Ordering - Pressure hose for TK6 H₂ (35 MPa)

Pressure hose for connecting to the defueling nozzle, complete with fittings and press-fittings supported by coil spring stubs. Not suitable for refueling with pre-cooled hydrogen acc. to SAE J2601.

Design hose:
max. operating pressure PS: 45 MPa / nominal bore at fitting: 4.5 mm / media temperature range: -20 °C up to +90 °C



Part No.	B1/B2 (female thread)	Hose length
E68-60809	UNF 9/16“-18*	3 m
E68-60812	UNF 9/16“-18*	4 m
E68-60813	UNF 9/16“-18*	5 m

* acc. to SAE JIC, 37° cone

Service receptacle

TNS12 H_2

Description



Features
- Integrated shut-off valve
- Low-noise discharging
- Sealing-friendly design
- Incl. protection cap

Vehicles running on hydrogen have to be serviced and checked regularly. Therefore it is necessary that all pressure vessels or fuel tanks are discharged. The WEH® TNS10 H_2 Service receptacle has been specially developed for this purpose.
It is mounted on the body panel of the hydrogen vehicle and enables easy discharging of the fuel tank.

For the WEH® TNS10 H_2 the suitable WEH® TW110 H_2 Service connector is also available.
The TW110 is simply connected to the service receptacle and discharging can begin. When discharging is complete, the service connector can be disconnected again.



Application
Service connector
Service receptacle for discharging hydrogen fuel tanks.
Operation only by specially trained service personnel. Not for self-service operation!
Attention: The TNS10 H_2 may not be used for filling!

Note:
The TNS10 H_2 may only be used in conjunction with a suitable upstream shut-off device or valve (e.g. ball valve)!

Technical data

Characteristics	Basic version
Technical nominal size (TNW)	6 mm
Nominal pressure	PN = 1.6 MPa
Max. allowable operating pressure	PS = 2 MPa
Temperature range	−40 °C up to +85 °C
Material	Corrosion resistant stainless steel
Sealing material	Hydrogen resistant
Design	Incl. integrated shut-off valve, bulkhead fitting and protection cap

Other designs on request

Ordering - WEH® TNS12 H₂ Service receptacle

approx. dimensions (mm)

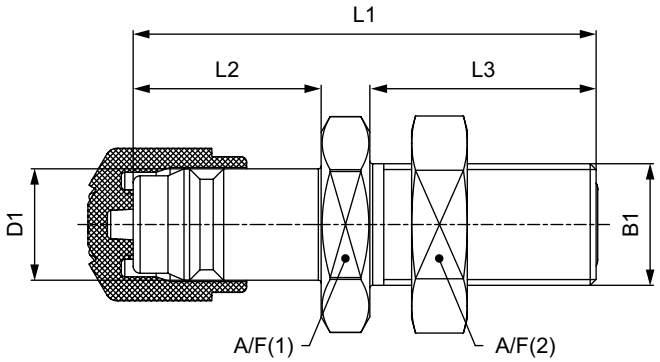

Part No.	Description	TNW	Pressure (MAWP)	B1 (male thread)	L1	L2	L3	D1	A/F(1) / A/F(2)
C1-151481	TNS10 H₂	6 mm	45 MPa	UN 11/16“-16 for sealing with O-Lok®Face Seal* for tube Ø 10 (3/8“)	66,5	27	32,5	16	27

* Face Seal acc. to SAE J1453

Accessories

The following accessories are available for the WEH® TNS10 H₂ Service receptacle:

WEH® TW110 H₂ Service connector

Service connector with integrated shut-off valve for discharging the pressure vessels and fuel tanks of hydrogen-powered vehicles.

approx. dimensions (mm)

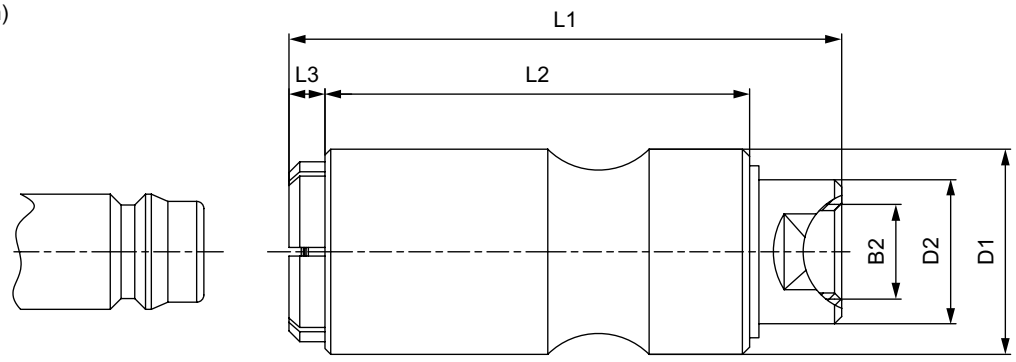

Part No.	Description	TNW	Pressure (PS)	B1 (female thread)	L1	L2	L3	D1	D1
C1-84461	TW110 H₂	8 mm	20 bar	G1/4"	77	59	5	28,5	20

Spare parts

Various parts are available as spares for the WEH® TNS10 H_2 Service receptacle.

Protection cap

To protect the TNS10 H2 service receptacle from dirt ingress and damage whilst not in use.



Part No.	Description
E80-83726	Protection cap

Description



Features
- **Quick connector:** Laborious screwing on is not necessary Connection and release in less than one second
- **High flow values:** Continuous technical nominal width of 10 mm for **maximum flow rate**
- **Compatibility:** Suitable for typical tube connections on H2 trailers
- **Grip sleeve lock**: Prevents unintentional loosening of connector
- **H2 compatibility**: Optimized for hydrogen applications with **high operating pressures**
- **Robust design:** Durable and reliable even under the most demanding conditions

The challenge is reliable supply of hydrogen fueling stations if hydrogen cannot be produced directly on site. Along with the establishment of an H_2 pipeline network, trailers for fine distribution are required that can transport hydrogen from central filling stations to fueling stations. The connection of the lines to these trailers is currently accomplished using mostly tube fittings, which are time-intensive and require special training.

The WEH® Connector TW850-S60 H_2 530 bar is the optimal solution for safe, fast and efficient filling of hydrogen tanks, such as H2 trailers for fueling station supply, with a maximum operating pressure of up to 530 bar.

Thanks to the innovative clamping jaw mechanism and continuous technical nominal width of 10 mm, the quick connector enables the highest flow values and significantly reduces filling time. Easy handling and the elimination of laborious tube fittings make the TW850-S60 H_2 530 bar an essential tool for filling hydrogen trailers and suppliers.

Thanks to the integrated locking lever, unintentional loosening of the connector is reliably prevented, which maximizes safety during the filling process. With its H_2 compatibility and robust design, the TW850-S60 H_2 530 bar sets new standards in hydrogen logistics and supports the growing demand for efficient solutions for the energy revolution.

Areas of use and applications
Filling hydrogen containers, e.g. H_2 trailers for fueling station supply, with a max. operating pressure of up to 530 bar.

Note: The connector is not designed for fueling H2 vehicles.
The media flow must be blocked off using a separate valve, there is no check valve in the TW850-S60 H_2 530 bar.

Technical data

Characteristics	Basic version
Technical nominal size (TNW)	up to 10 mm, depending on design
Max. allowable operating pressure	PS = up to 530 bar, depending on design
Temperature range	-40 °C to +85 °C
Medium	Hydrogen
Leak rate	1 x 10-³ mbar x l/s
Materials	Corrosion resistant
Sealing material	NBR
Actuation	Manual via the grip sleeve

Ordering - WEH® TW850-S60 H_2 quick connector

approx. dimensions (mm)

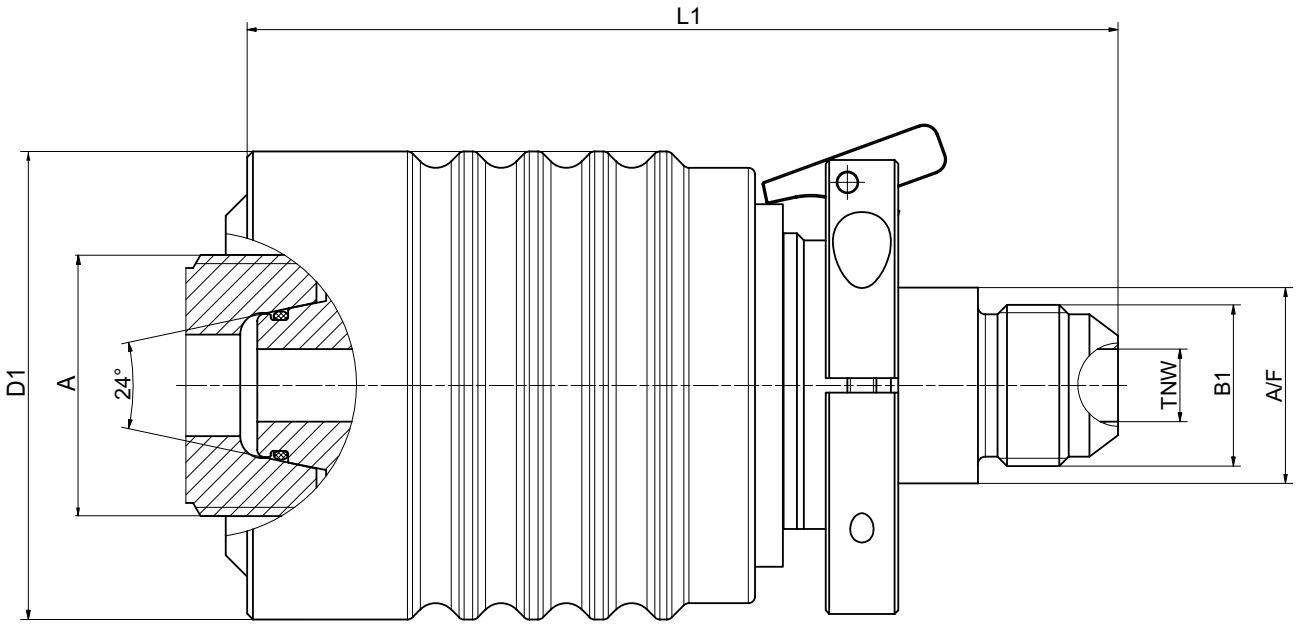

Part no.	Body size	Technical nominal size (TNW)	Connection size A (female thread)	Connection standard A	B1 (male thread)	L1	D2	A/F
C1-190856	6	5 mm	W21.8x1/14" - LH	DIN 477-1	7/8"-14 UNF*	109	47	24
C1-189758	4	7 mm	W30x2.0 - LH	DINEN ISO 5145 (No. 38)	7/8"-14 UNF*	119	57,5	27
C1-186400	6	10 mm	M36x2.0-LH	DIN EN ISO 8434-1	7/8"-14 UNF*	120	64,5	27
C1-189766	7	10 mm	M42x2.0 - LH	DIN EN ISO 8434-1	7/8"-14 UNF*	129	83	32
C1-190859	8	10 mm	M52x2.0 - LH	DIN EN ISO 8434-1	7/8"-14 UNF*	130	93	32

* acc. to SAE J514, 37° cone
Other connection types on request..

Ordering - WEH® TW850-S60 H_2 quick connector 530 bar

approx. dimensions (mm)

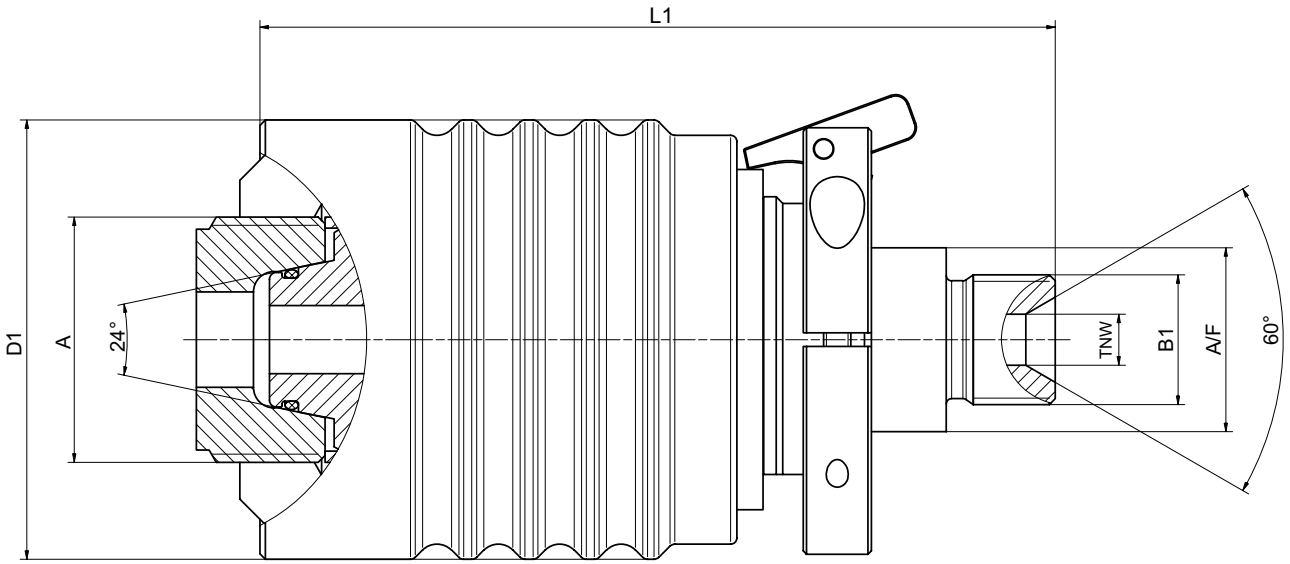

Part no.	Body size	Max. operating pressure (PS)	Technical nominal size (TNW)	Connection size A (male thread)	Connection standard A	B1 (male thread)	L1	D2	A/F
C1-190959	2	530 bar	7 mm	W21.8x1/14" - LH	DIN 477-1	3/4"-16 UNF	106	47,5	24
C1-189759	4	530 bar	5 mm	W30x2.0 - LH	DINEN ISO 5145 (No. 38)	3/4"-16 UNF	116	57,5	27
C1-189768	6	530 bar	7,5 mm	M36x2.0-LH	DIN EN ISO 8434-1	3/4"-16 UNF	117	64,5	27
C1-189767	7	530 bar	7,5 mm	M42x2.0 - LH	DIN EN ISO 8434-1	3/4"-16 UNF	126	83	32
C1-190960	8	530 bar	7,5 mm	M52x2.0 - LH	DIN EN ISO 8434-1	3/4"-16 UNF	127	93	32

Other connection types on request.

Accessories

The following accessories are available for the WEH® TW_{850}-S_{60} H_2 quick connector :

Pressure hose

Pressure hose for connection to the quick connector, complete with fittings.
Media temperature range: -40°C to +65°C

Part no.	Description	Technical nominal size (TNW)	Connection (female thread)	max. allowable operating pressure (PS)	Hose length
C1-143166	Pressure hose H_2 35 MPa	5,6 mm	UNF 7/8"-14	450 bar	4 m
C1-187988	Pressure hose H_2 35 MPa	7,5 mm	UNF 3/4"-16	962,5 bar	4 m

Other hose lengths are available on request.

Manifold block

TMF900-S1 H_2

Description



Features
- Reduces the number of sealing points in gas systems and vehicles
- Simple and fast installation
- Dimensions, type, and number of connections can be customized according to customer requirements.

Gas distributors reduce the number of sealing points and simplify installation, which can be carried out in a single block. They can be used to distribute gases to different pipes and to combine fittings in a manifold. Dimensions and the type and number of connections can be customized according to customer requirements. Filters, check valves, and other components can also be installed at the factory.

Application
Distribution block for hydrogen applications in gas engineering systems or vehicles.

Technical data

Characteristics	Basic version
Max. allowable operating pressure PS	Depending on the project
Temperature Range	-40°C up to +85°C
Material	Stainless steel
Design	Distribution block with one media inlet and six outlets, as well as mounting holes..

Dimensions, type, and number of connections can be customized to customer requirements

Ordering - WEH® TMF900-S1 H_2 manifold block

approx. dimensions (mm)

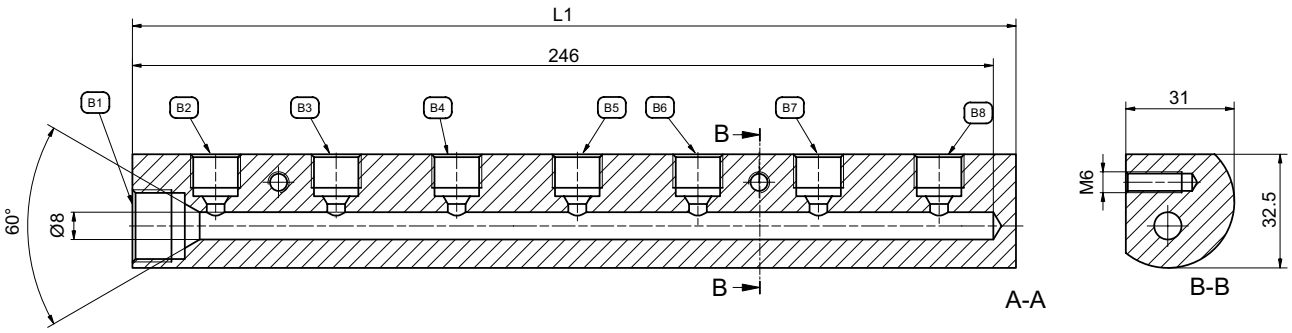

Part no.	Description	Pressure (PS)	B1 (female thread)	B2-B8 (female thread)	L1
C1-192622	TMF900-S1 H_2	48.125 MPa	13/16“-16 UN	9/16“-18 UNF	253

Abbreviation	Definition
Pressure specifications	(all pressure data is to be understood as overprint, unless otherwise stated)
PN	Nominal pressure after temperature compensation at 15 °C (59 °F)
PS	Maximum allowable operating pressure acc. to Pressure Equipment Directive 2014/68/EU, Article 2 paragraph 8
PT	Hydrostatic test pressure acc. to Pressure Equipment Directive 2014/68/EU, Annex I no. 7.4
PP	Actuation pressure for hydraulic and pneumatic components
PC	Pressure at which the check valve opens and the first indication of flow occurs
WP	'Working pressure' means the maximum pressure to which a component is designed to be subjected to and which is the basis for determining the strength of the component under consideration
MAWP	Max. allowable operating pressure at which the weakest point of the system or the vessel (e.g. cylinder valve) can operate at a certain temperature during normal operation
Dimensions	
L1, L2, L3 ...	Length specification
D1, D2, D3 ...	Diameter specification
A/F(1), A/F(2) ...	Wrench size specification
Ports	
A / X	Customer-specific port (test piece, sample, cylinder valve, handwheel respiratory protective equipment)
B1, B2, B3 ...	Media ports
C1, C2, C3 ...	Gas recirculation ports
P1, P2, P3 ...	Pilot pressure ports
MA1, MA2 ...	Measuring ports
Q	Drain port filter
G	Mounting bores
Others	
DN	Nominal size (DN) acc. to Pressure Equipment Directive 2014/68/EU, whereby the largest, pressurized diameter of the media or pilot pressure connections of the WEH Device (A, B1, B2, B3 or C1, C2, C3 and P1, P2, P3) which faces the customer´s pipe system, is relevant. Expressed by a rounded, dimensionless number, e. g. DN 25.
TNW	The technical nominal size (formerly expressed by "effective diameter") is the smallest diameter available for the media flow of the respective pressure device. Expressed by a number with unit, e. g. 12 mm.
µm	Max. diameter of the filtered particle
Kv	Is the discharge of water in m^3/h at a pressure drop of 1 bar (14.5 psi), acc. to DIN/EN 60534-2
Cv	Is the discharge of water in gallons per minute at a pressure drop of 1 psi, acc. to DIN/EN 60534-2
IR	Infrared data interface
ENR	Exchangeable data interface (exchangeable nozzle receiver)
TS	Maximum allowable temperature acc. to Pressure Equipment Directive 2014/68/EU, Article 2 paragraph 9

Abbreviation	Definition
Breakaway force	Is the force range, in which the breakaway releases
NC	Normally closed (initial position of shut-off valve)
NO	Normally open (initial position of shut-off valve)
Technical explanations	
Term	Definition
Temperature range	Is the temperature range in which the WEH® Product can be used. If no explicit information on medium and ambient temperature is given, this temperature range applies to both medium and environment.
Media temperature range	Is the temperature range of the medium used, which can flow through the WEH® Product (may change depending on the time of measurement).
Ambient temperature range	Is the temperature range of the environment in which the WEH® Product can be used.
Leak rate	Is the maximum external leak rate, which the WEH® Product exhibits in delivery condition.
Internal leak rate	The internal leak rate depends, among other things, on type of application, medium and pressure difference on the WEH® Product. On request it can be specified more precisely.
Max. side load	Is the max. allowable sum of all external forces that may act on the device under intended use. Note: External forces can affect the life time of WEH® Products and can cause damage. Tensile and transverse loads as well as vibrations and pressure impacts need to be considered, e.g. by user side measures such as on site mountings and similar. Therefore, lateral forces such as whipping hoses or other equipment must be avoided. WEH® Products should be installed in such a way, that lateral forces which could lead to leakage or damage can not occur. Special applications require a special consultation before selecting the product.
Products with pneumatic actuation	The customer has to ensure there is adequate axial movement when pneumatically actuated WEH® Products are used in automated systems, see maximum side load. Ideally the products should be mounted with a floating joint or introduced individually to prevent the possibly existing clamping jaws getting blocked or jammed in the thread of the test piece.
Sealing material	On request the WEH® Product can be adapted to customer specific applications regarding to the sealing materials used. The clarification of the media compatibility and suitability of the adapted WEH® Product for the final application is always the responsibility of the end user.
Corrosion resistant	WEH® Products are designed for use in temperate climate zones - with low levels of humidity and salinity in the air. An accelerated formation of rust or corrosion may occur at or near the sea. Therefore, reduce the inspection interval recommended for normal use and send in the WEH® Product for maintenance immediately if you notice increased soot, rust or corrosion.
Storage / life time of components	There are certain requirements for every WEH® Product. WEH® Products are generally products which may be subject to wear and fatigue during operation and depending on your individual application/use. For details - in particular regarding the corresponding minimum inspection and maintenance intervals – please refer to the respective operating instructions for the WEH® Product.

Abbreviation	Definition
Breakaway force	Is the force range, in which the breakaway releases
NC	Normally closed (initial position of shut-off valve)
NO	Normally open (initial position of shut-off valve)
Technical explanations	
Term	Definition
Temperature range	Is the temperature range in which the WEH® Product can be used. If no explicit information on medium and ambient temperature is given, this temperature range applies to both medium and environment.
Media temperature range	Is the temperature range of the medium used, which can flow through the WEH® Product (may change depending on the time of measurement).
Ambient temperature range	Is the temperature range of the environment in which the WEH® Product can be used.
Leak rate	Is the maximum external leak rate, which the WEH® Product exhibits in delivery condition.
Internal leak rate	The internal leak rate depends, among other things, on type of application, medium and pressure difference on the WEH® Product. On request it can be specified more precisely.
Max. side load	Is the max. allowable sum of all external forces that may act on the device under intended use. Note: External forces can affect the life time of WEH® Products and can cause damage. Tensile and transverse loads as well as vibrations and pressure impacts need to be considered, e.g. by user side measures such as on site mountings and similar. Therefore, lateral forces such as whipping hoses or other equipment must be avoided. WEH® Products should be installed in such a way, that lateral forces which could lead to leakage or damage can not occur. Special applications require a special consultation before selecting the product.
Products with pneumatic actuation	The customer has to ensure there is adequate axial movement when pneumatically actuated WEH® Products are used in automated systems, see maximum side load. Ideally the products should be mounted with a floating joint or introduced individually to prevent the possibly existing clamping jaws getting blocked or jammed in the thread of the test piece.
Sealing material	On request the WEH® Product can be adapted to customer specific applications regarding to the sealing materials used. The clarification of the media compatibility and suitability of the adapted WEH® Product for the final application is always the responsibility of the end user.
Corrosion resistant	WEH® Products are designed for use in temperate climate zones - with low levels of humidity and salinity in the air. An accelerated formation of rust or corrosion may occur at or near the sea. Therefore, reduce the inspection interval recommended for normal use and send in the WEH® Product for maintenance immediately if you notice increased soot, rust or corrosion.
Storage / life time of components	There are certain requirements for every WEH® Product. WEH® Products are generally products which may be subject to wear and fatigue during operation and depending on your individual application/use. For details - in particular regarding the corresponding minimum inspection and maintenance intervals – please refer to the respective operating instructions for the WEH® Product.



gepef

Hydraulic Fittings



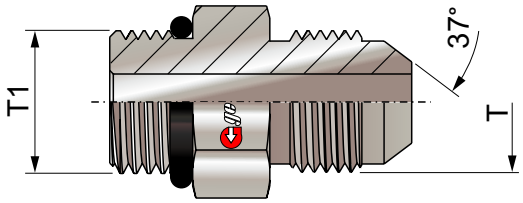

Type – Thread T	Size
7/16-20 UNF	-4
1/2-20 UNF	-5
9/16-18 UNF	-6
3/4-16 UNF	-8
7/8-14 UNF	-10
1.1/16-12 UN	-12
1.3/16-12 UN	-14
1.5/16-12 UN	-16
1.5/8-12 UN	-20
1.7/8-12 UN	-24

For quotation: Specify thread T and thread T1
Thread T according to SAE J514 – JIC
Thread T1 according to the table below

Type O	Type C	Type WD
ISO 6149-2 / -3 Metric Thread	DIN 3852-2 - BSPT Thread	ISO 1179-2 - BSP Thread
ISO 11926-2 / -3 UNF Thread	ANSI / ASME B1.20.1-1983 - NPT Thread	ISO 9974-2 - Metric Thread
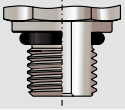	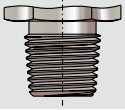	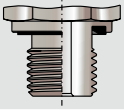

Coding Example:

CRJ 7/16 UNF x C 1/4 NPT (Straight JIC 37° fitting, 7/16-20 UNF thread x 1/4 NPT, sealing type Form C).

For AISI 316 stainless steel, add the letter I at the end of the code.

For Viton (FKM) or EPDM seals, add the letter V or E at the end of the code.

If you require a different adapter configuration not listed in this catalog, please contact our Technical Department.



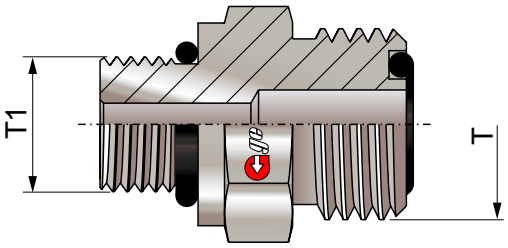

Type – Thread T	Size
9/16-18 UNF	-4
11/16-16 UN	-6
13/16-16 UN	-8
1-14 UNS	-10
1.3/16-12 UN	-12
1.7/16-12 UN	-16
1.11/16-12 UN	-20
2-12 UN	-24

For quotation: Specify thread T and thread T1
Thread T according to ISO 8434-3 – ORFS
Thread T1 according to the table below

Type O	Type C	Type WD
ISO 6149-2 / -3 Metric Thread	DIN 3852-2 - BSPT Thread	ISO 1179-2 - BSP Thread
ISO 11926-2 / -3 UNF Thread	ANSI / ASME B1.20.1-1983 - NPT Thread	ISO 9974-2 - Metric Thread
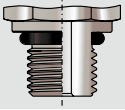	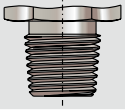	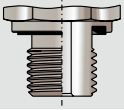

Coding Example:
CRFS 9/16 UNF x C 1/4 NPT (Straight ORFS fitting, 9/16-18 UNF thread x 1/4 NPT, sealing type Form C).
For AISI 316 stainless steel, add the letter I at the end of the code.
For Viton (FKM) or EPDM seals, add the letter V or E at the end of the code.
If you require a different adapter configuration not listed in this catalog, please contact our Technical Department.



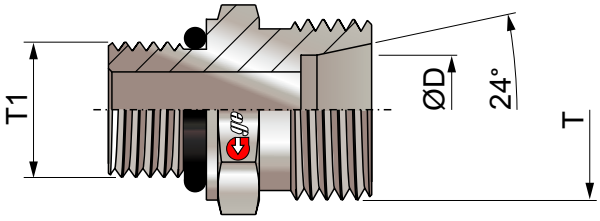

Series L	
Type – Thread T	D (Tube)
M12x1,5	6
M14x1,5	8
M16x1,5	10
M18x1,5	12
M22x1,5	15
M26x1,5	18
M30x2	22
M36x2	28
M45x2	35
M52x2	42

Series S	
Type – Thread T	D (Tube)
M14x1,5	6
M16x1,5	8
M18x1,5	10
M20x1,5	12
M22x1,5	14
M24x1,5	16
M30x2	20
M36x2	25
M42x2	30
M52x2	38

For quotation: Specify thread T and thread T1
Thread T according to DIN 2353
Thread T1 according to the table below

Type O	Type C	Type WD
ISO 6149-2 / -3 Metric Thread	DIN 3852-2 - BSPT Thread	ISO 1179-2 - BSP Thread
ISO 11926-2 / -3 UNF Thread	ANSI / ASME B1.20.1-1983 - NPT Thread	ISO 9974-2 - Metric Thread
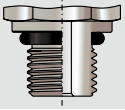	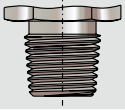	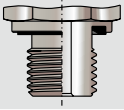

Coding Example:

CRDIN 8L x WD G1/4 BSP (Straight DIN 2353 fitting, M14x1.5 thread, tube Ø8, Series L x 1/4 BSP, sealing type Form WD).

For AISI 316 stainless steel, add the letter I at the end of the code.

For Viton (FKM) or EPDM seals, add the letter V or E at the end of the code.

If you require a different adapter configuration not listed in this catalog, please contact our Technical Department.



gepef

Diagnostic
Quick Coupling

DIAGNOSTIC AND MONITORING QUICK COUPLING – ERDM / ERDF

The Diagnostic Quick Coupling is used to verify operating pressure in hydraulic circuits.
It features an internal valve system that blocks hydraulic flow during connection and disconnection, preventing oil loss.

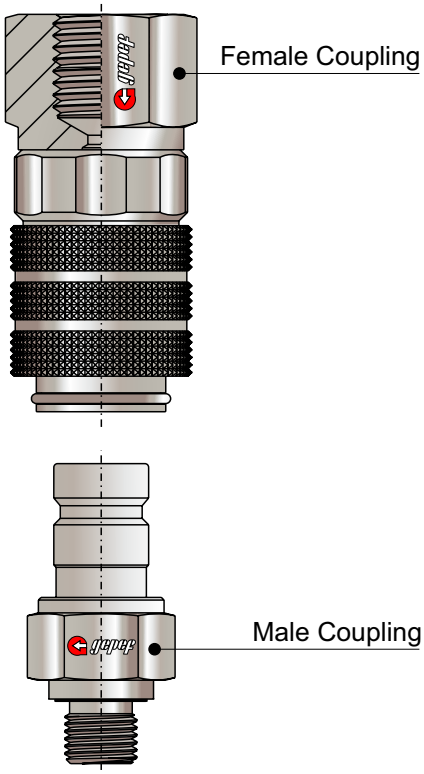

Connection
By pushing the male or female coupling.
(Connection is not permitted when pressurized)

Interchangeability
ISO 15171-1

Disconnection
Sleeve retraction
(Disconnection is not permitted when pressurized)

Materials
Carbon steel with hardened components

Rated Working Pressure
Up to 420 bar / 6,090 PSI

Surface Treatment
Trivalent zinc (Cr VI free)
Zinc – Nickel

Seals and Operating Temperature Ranges
NBR / Buna-N (-25°C up to 100°C) (-13°F up to +212°F) - (Standard)
(FKM) Viton (-15°C up to 200°C) (-5°F up to +392°F) - **V**
EPDM (-40°C up to 150°C) (-40°F up to +302°F) - **E**

Fluid
Hydraulic oils and other mineral-based fluids
Check chemical compatibility table for seals

Diagnostic Male Coupling ISO 15171-1

ERDM



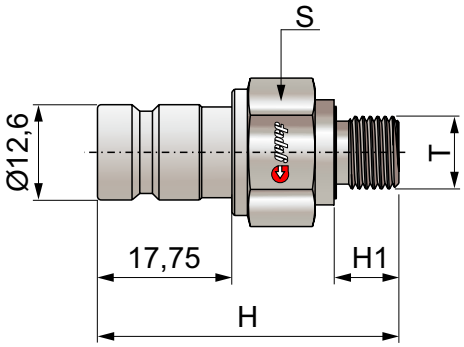

Type – Thread T	H	H1	S	Working Pressure	Sealing Type
ERDM 1/8 NPT	41	10	17	420 bar / 6090 PSI	C
ERDM 1/4 NPT	41	15	17	420 bar / 6090 PSI	C
ERDM G1/8 BSP	41	8	17	420 bar / 6090 PSI	WD
ERDM G1/4 BSP	41	12	19	420 bar / 6090 PSI	WD
ERDM M12x1,5	41	10	17	420 bar / 6090 PSI	O
ERDM M14x1,5	41	12	19	420 bar / 6090 PSI	O
ERDM 7/16 UNF	41	9,5	17	420 bar / 6090 PSI	O
ERDM 9/16 UNF	41	10	19	420 bar / 6090 PSI	O

Type O	Type C	Type WD
ISO 6149-2 / -3 Metric Thread	DIN 3852-2 - BSPT Thread	ISO 1179-2 - BSP Thread
ISO 11926-2 / -3 UNF Thread	ANSI / ASME B1.20.1-1983 - NPT Thread	ISO 9974-2 - Metric Thread
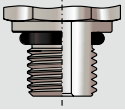	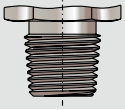	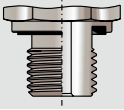

Coding Example:

ERDM G1/8 BSP (Diagnostic male coupling G1/8 BSP, WD sealing type).

For AISI 316 stainless steel, add the letter I at the end of the code.

For Viton (FKM) or EPDM seals, add the letter V or E at the end of the code.

If another type of male diagnostic coupling not listed in this catalog is required, please contact our technical department.

Diagnostic Male Coupling ISO 15171-1 with Pressure Test Point

N-ERDM



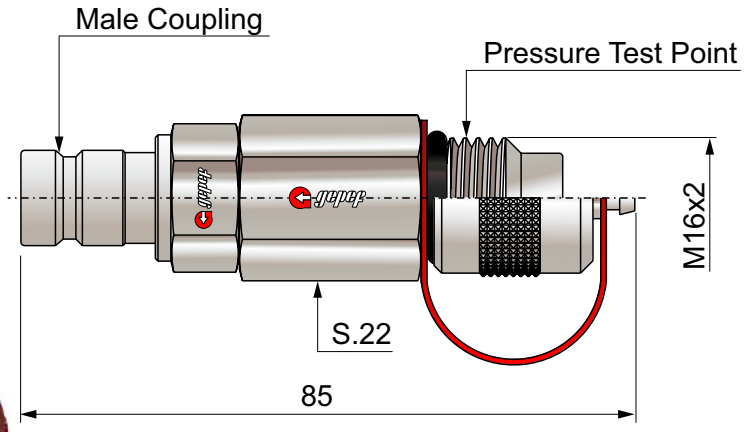

Note: Pressure test point supplied without valve.

Diagnostic Female Coupling ISO 15171-1

ERDF



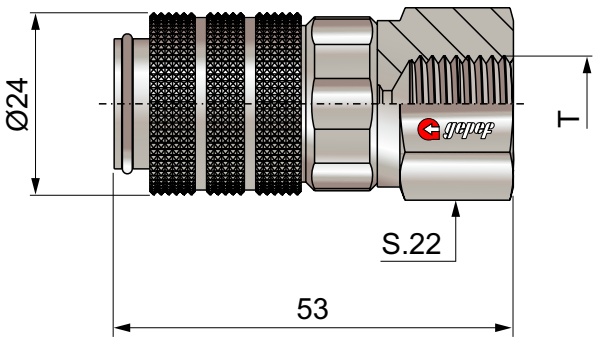

Type – Thread T
ERDF 1/8 NPT
ERDF 1/4 NPT
ERDF G1/8 BSP
ERDF G1/4 BSP

Diagnostic Female Coupling ISO 15171-1 with Pressure Test Point

N-ERDF



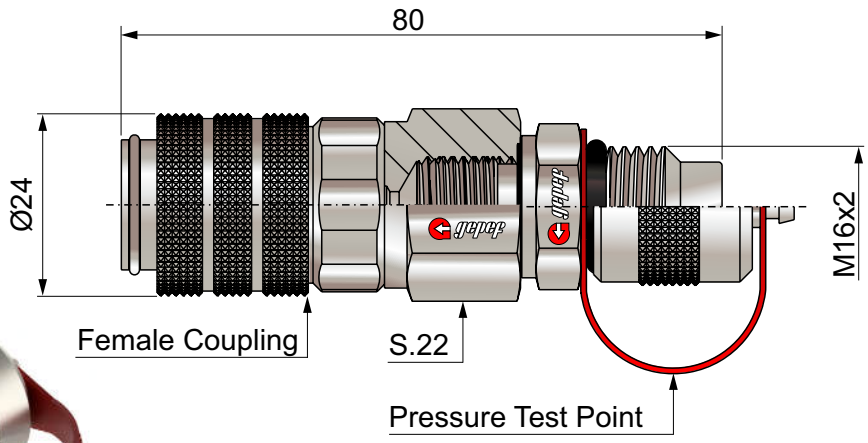

Note: Pressure test point supplied without valve.

Diagnostic Female Coupling ISO 15171-1 – 90° with Pressure Test Point

N-ERDF-90°



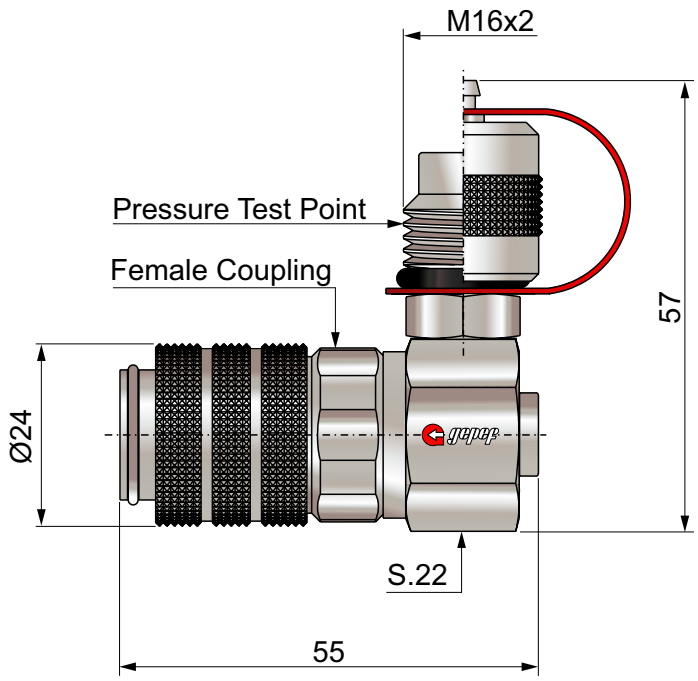

Note: Pressure test point supplied without valve.

DIAGNOSTIC AND MONITORING QUICK COUPLING TPKMT / TPKMTF

The Diagnostic and Monitoring Quick Coupling for operating pressures up to 600 bar / 8,702 PSI can be connected under pressure up to 300 bar / 4,350 PSI on the male coupling.
This system allows fast, leak-free monitoring of the circuit's operating pressure without the need for a permanently installed pressure gauge.

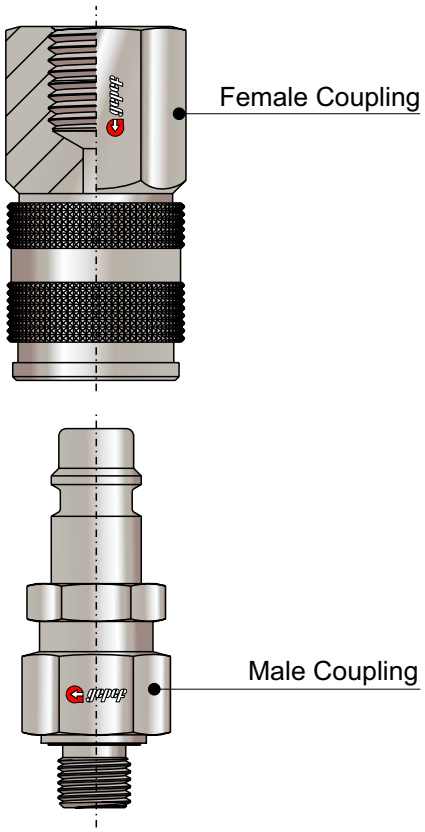

Connection
By pushing the male or female coupling
Permitted when pressurized up to 300 bar / 4,350 PSI

Materials
Carbon steel with hardened components

Disconnection
Sleeve retraction

Surface Treatment
Trivalent zinc (Cr VI free)
Zinc – Nickel

Rated Working Pressure
Up to 600 bar / 8702 PSI

Fluids
Hydraulic oils and other mineral-based fluids
Check chemical compatibility table for seals

Seals and Operating Temperature Ranges
NBR / Buna-N (-25°C up to 100°C) (-13°F up to +212°F) - (Standard)
(FKM) Viton (-15°C up to 200°C) (-5°F up to +392°F) - **V**
EPDM (-40°C up to 150°C) (-40°F up to +302°F) - **E**

TPKMT



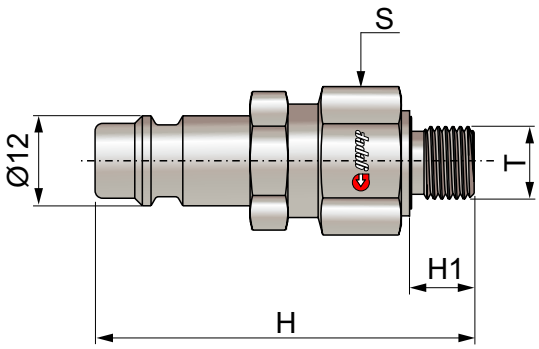

Type – Thread T	H	H1	S	Working Pressure	Sealing Type
TPKMT 1/2 UNF	50	9,5	17	600 bar / 8702 PSI	O
TPKMT 1/8 NPT	50	10	17	400 bar / 5801 PSI	C
TPKMT 1/4 NPT	54	15	17	600 bar / 8702 PSI	C
TPKMT G1/8 BSP	50	8	17	400 bar / 5801 PSI	WD
TPKMT G1/4 BSP	54	12	19	600 bar / 8702 PSI	WD

Type O	Type C	Type WD
ISO 6149-2 / -3 Metric Thread	DIN 3852-2 - BSPT Thread	ISO 1179-2 - BSP Thread
ISO 11926-2 / -3 UNF Thread	ANSI / ASME B1.20.1-1983 - NPT Thread	ISO 9974-2 - Metric Thread
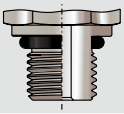	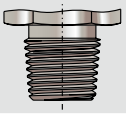	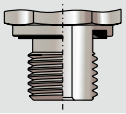

Coding Example:

TPKMT G1/8 BSP (Male coupling G1/8 BSP, WD sealing type).

For AISI 316 stainless steel, add the letter I at the end of the code.

For Viton (FKM) or EPDM seals, add the letter V or E at the end of the code.

If another type of male diagnostic coupling not listed in this catalog is required, please contact our technical department.

Female Coupling — TPKMTF



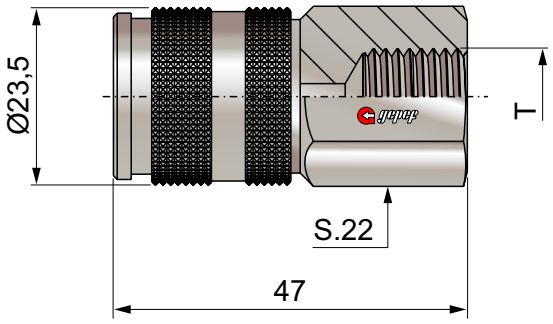

Type – Thread T
TPKMTF 1/2 UNF
TPKMTF G1/8 BSP
TPKMTF G 1/4 BSP
TPKMTF 1/8 NPT
TPKMTF 1/4 NPT

Female Coupling with Pressure Test Point — N-TPKMTF



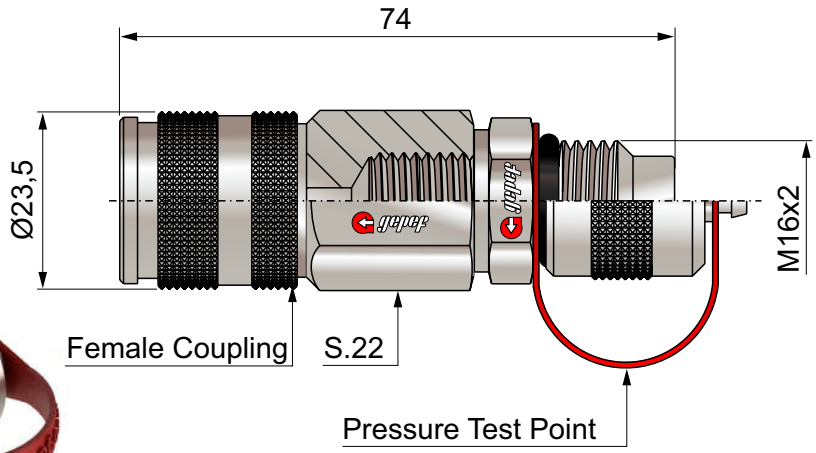

Note: Pressure test point supplied without valve.



gepef

Pressure Intensifier

PRESSURE INTENSIFIER — INTRODUCTION

ScanWill intensifiers are based on a piston principle, where a larger diameter piston pushes a smaller diameter piston, thus increasing the pressure to a factor equal to the ratio: Larger diameter area divided by smaller diameter area.

The outlet pressure will always be proportionate to the supplied pressure.

The diagram shows the basic principle of the ScanWill intensifiers, consisting of a piston arrangement, a Piston.
Control Valve PCV, Check Valves CV1 & CV2 and the Pilot Operated check Valve POV.

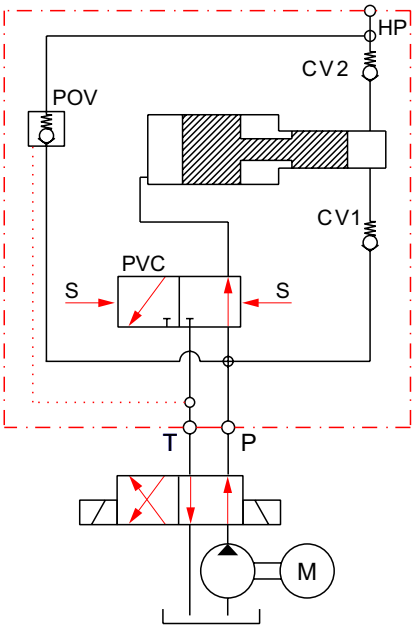

ScanWill's compact hydraulic pressure intensifiers offer an easy, energy-saving, safe and cost-efficient solution to achieving a higher output pressure from an existing low-pressure power source.

Low pressure supplied to the inlet port – say 15 - 200 bar / 218 - 2,900 psi – is transformed to a higher pressure at the outlet port – from 20 - 4,000 bar / 290 - 58,000 psi.

ScanWill's pressure intensifiers are offered in cast iron and steel, with a chrome finish, as well as in stainless steel for the oil & gas sector.



PRESSURE INTENSIFIER – PRODUCTS



(Low / Medium Pressure) MP-S

In-line pressure intensifier

End pressure range: 20 - 800 bar / 290 - 11,600 psi

Multiple intensification ratios available

Reciprocating - continuously delivers flow during pressure build-up

All high-pressure valves are integrated



(Low / Medium Pressure) MP-T

n-line pressure intensifier

End pressure range: 20 - 800 bar / 290 - 11,600 psi

Multiple intensification ratios available

Reciprocating - continuously delivers flow during pressure build-up

All high-pressure valves are integrated



(Low / Medium Pressure) MP-M

In-line pressure intensifier

End pressure range: 20 - 800 bar / 290 - 11,600 psi

Multiple intensification ratios available

Reciprocating - continuously delivers flow during pressure build-up

All high-pressure valves are integrated – including a P.O. check Valve PO



MP-C (Low / Medium Pressure)

Cetop DO3 / NG6 pressure intensifier

End pressure range: 20 - 500 bar / 290 - 7,250 psi

Multiple intensification ratios available

Reciprocating - continuously delivers flow during pressure build-up

All high-pressure valves are integrated – including a P.O. check Valve POV



(Low / Medium Pressure) MP-L

In-line pressure intensifier

End pressure range: 20 - 800 bar / 290 - 11,600 psi

Multiple intensification ratios available

Reciprocating - continuously delivers flow during pressure build-up

All high-pressure valves are integrated – including a P.O. check Valve POV



(Low / Medium Pressure) MP-CT

Cetop DO3 / NG6 pressure intensifier

End pressure range: 20 - 800 bar / 290 - 11,600 psi

Multiple intensification ratios available

Reciprocating - continuously delivers flow during pressure build-up

All high-pressure valves are integrated – including a P.O. check Valve POV

No change of pressure in A & B ports, separate port for high pressure

PRESSURE INTENSIFIER – PRODUCTS





(Low / Medium Pressure) MP-F
Flange-on pressure intensifier
End pressure range: 20 - 700 bar / 290 - 10,150 psi
Multiple intensification ratios available
Reciprocating - continuously delivers flow during pressure build-up
All high-pressure valves are integrated – including a P.O. check Valve POV

(High Pressure) MP-2000
In-line pressure intensifier
End pressure range: 800 - 3,000 bar / 11,600 - 43,500 psi
Multiple intensification ratios available
Reciprocating - continuously delivers flow during pressure build-up
All high-pressure valves are integrated / Selection of top plates for high pressure connection available

Pressure Intensifier

MP-S (Low / Medium Pressure)



ScanWill®
More Pressure. More Power

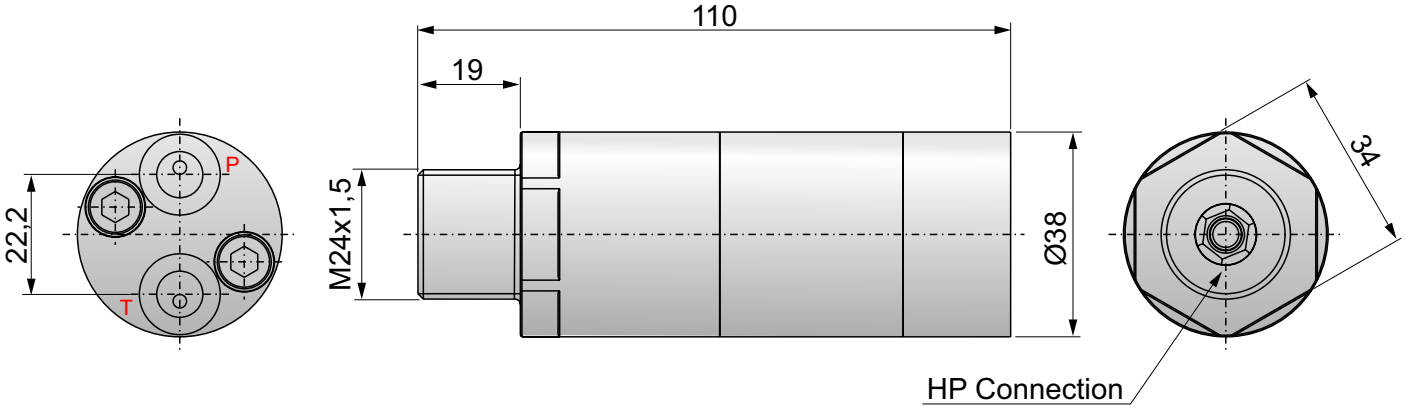

P & T Ports: G1/8" (1/8" BSP), HP-Port: G1/4" (1/4" BSP)

Before installing the intensifier

Ensure the surroundings and the connecting parts are clean and free from burrs..

Fluids

For use with standard hydraulic oils and water glycol (min. 5% glycol). Preferred viscosity range 20 - 46 cSt

Filtration requirements

10 µm nominal or better, maximum 19/16 according to ISO 4406

Hydraulic bleeding

During start-up of the system it is recommended to ensure no air is trapped in the system, as this may cause function problems.

Connecting the intensifier

Connecting the MP-S pressure intensifier to a system is only to be done by trained personnel.

1. Connect the P-port of the intensifier to the hydraulic pressure supply.
2. Connect the T-port to the tank line.
3. Connect the HP-port to the end pressure line / cylinder.

CAUTION:

Ensure the fittings and components on the output side are rated for the end pressure delivered by the Scanwill intensifier.

High Flow Applications

In systems with flow rates larger than permissible for the intensifier, the inlet to the P and T ports must be limited according to the flow pressure table below. To maintain the speed in the cylinder, an external p.o.check valve capable of handling the system flow and end pressure can be inserted in parallel with the MP-S intensifier

Function

The MP-S is an in-line hydraulic pressure intensifier designed to increase a supplied pump pressure to a higher end pressure (for fluids only). The intensification ratio is fixed, and the end pressure is always proportional with the supplied pressure. Fig. 1 shows the schematic of the MP-S intensifier increasing the pressure in a single or double acting cylinder.

When applying flow to the P-port and connecting the T-port to tank, the full pump flow will go straight through the intensifier check valves CV1, CV2 and POV to the cylinder, allowing the rod to move out at pump speed. When the cylinder is filled up and the pressure has risen to pump pressure, the intensifier pistons automatically increase the pressure to the set end pressure. Keeping the pump connected ensures the intensifier will automatically work to maintain the end pressure in the cylinder, in case the pressure drops.

The cylinder can be retracted by activating the integrated p.o. check valve POV by connecting the P-port to tank and the T port to pump. This will open the POV creating a free passage from the HP-side back to tank.

FIG.1

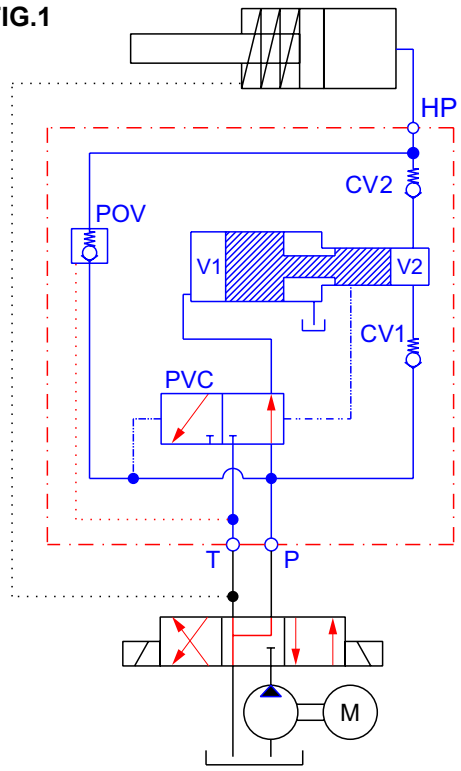

Intensification ratios, flow and pressure settings

Product number	Intensification ratio	Max. supply Flow* (LPM)	Outlet supply pressure** (bar)	Average outlet Flow*** (LPM)	Outlet pressure range**** (bar)
MP-S-P-2.0-G	2.0	8.0	200	0.3	30 - 400
MP-S-P-2.4-G	2.4	8.0	200	0.3	30 - 480
MP-S-P-2.8-G	2.8	8.0	200	0.3	50 - 560
MP-S-P-3.0-G	3.0	8.0	200	0.3	60 - 600
MP-S-P-3.4-G	3.4	8.0	200	0.2	60 - 680
MP-S-P-4.0-G	4.0	8.0	200	0.2	70 - 800
MP-S-P-5.0-G	5.0	8.0	160	0.2	70 - 800
MP-S-P-6.0-G	6.0	8.0	133	0.1	80 - 800
MP-S-P-7.0-G	7.0	8.0	114	0.1	100 - 800
MP-S-P-9.0-G	9.0	8.0	61	0.1	130 - 800

* Max. supply flow limits not to be exceeded, as this will damage the internal check valves and over speed the intensifier pistons. Min. supply flow is 2 LPM

** Max. supply pressure limits not to be exceeded, as this will cause damage to the intensifier parts, and will cause to high outlet pressure.
Pressure spikes must be avoided.

*** The Average flow is the flow generated by the intensifier pistons when increasing the pressure from pump pressure to end pressure. Initially the flow is high, and as the pressure increases the flow decreases and will eventually stop when the end pressure has been reached.

**** The outlet pressure is proportional with the supplied pressure, and can be set at any value within the range.
The max. pressure within the range for each intensification ratio must not be exceeded.

MP-T (Low / Medium Pressure)



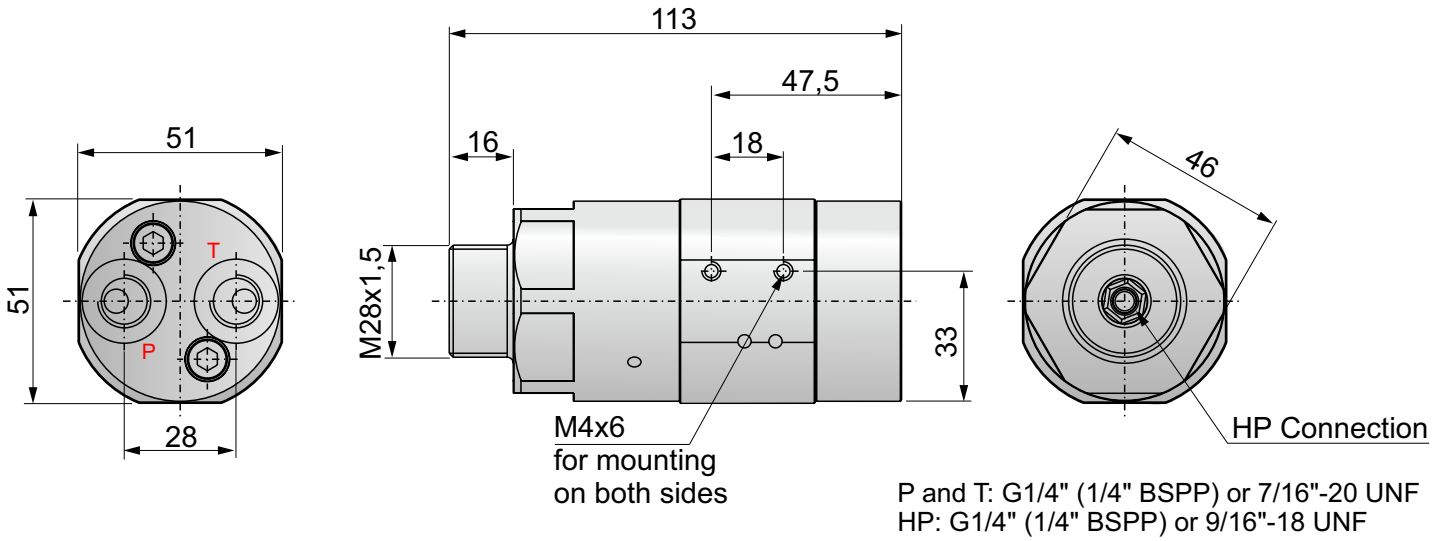

P and T: G1/4" (1/4" BSPP) or 7/16"-20 UNF
HP: G1/4" (1/4" BSPP) or 9/16"-18 UNF

Before installing the intensifier

Ensure the surroundings and the connecting parts are clean and free from burrs.

Fluids

For use with standard hydraulic oils and water glycol (min. 5% glycol). Preferred viscosity range 20 - 46 cSt

Filtration requirements

10 µm nominal or better, maximum 19/16 according to ISO 4406

Hydraulic bleeding

During start-up of the system, it is recommended to ensure no air is trapped in the system, as this may cause function problems.

Connecting the intensifier

Connecting the MP-T pressure intensifier to a system is only to be done by trained personnel.
1. Connect the P-port of the intensifier to the hydraulic pressure supply.
2. Connect the T-port to the tank line.
3. Connect the HP-port to the end pressure line / cylinder.

CAUTION:
Ensure the fittings and components on the output side are rated for the end pressure delivered by the Scanwill intensifier.

Mounting and connection

The MP-T pressure intensifier can be mounted using a standard pipe clamp. The accessories below for clamping and connecting the intensifier are available.


Mounting brackets for base plate


Nut M28 x 1.5 for fixation


Connection kit for block mounting

Pressure Intensifier

MP-T (Low / Medium Pressure)

Function

The MP-T is an in-line hydraulic pressure intensifier designed to increase a supplied pump pressure to a higher end pressure (for fluids only). The intensification ratio is fixed, and the end pressure is always proportional with the supplied pressure. Fig. 1 shows the schematic of the MP-T intensifier increasing the pressure in a single or double acting cylinder.
When applying flow to the P-port and connecting the T-port to tank, the full pump flow will go straight through the intensifier check valves CV1, CV2 and POV (optional) to the cylinder, allowing the rod to move out at pump speed. When the cylinder is filled up and the pressure has risen to pump pressure, the intensifier pistons automatically increase the pressure to the set end pressure. Keeping the pump connected ensures the intensifier will automatically work to maintain the end pressure in the cylinder, in case the pressure drops.
If the POV is integrated the cylinder can be retracted by connecting the P-port to tank and the T-port to pump. This will open the POV creating a free passage from the HP-side back to tank

High Flow Applications

In systems with flow rates larger than permissible for the intensifier, the inlet to the P and T ports must be limited according to the flow pressure table below. To maintain the speed in the cylinder, an external p.o.check valve capable of handling the system flow and end pressure can be inserted in parallel with the MP-T intensifier

FIG.1

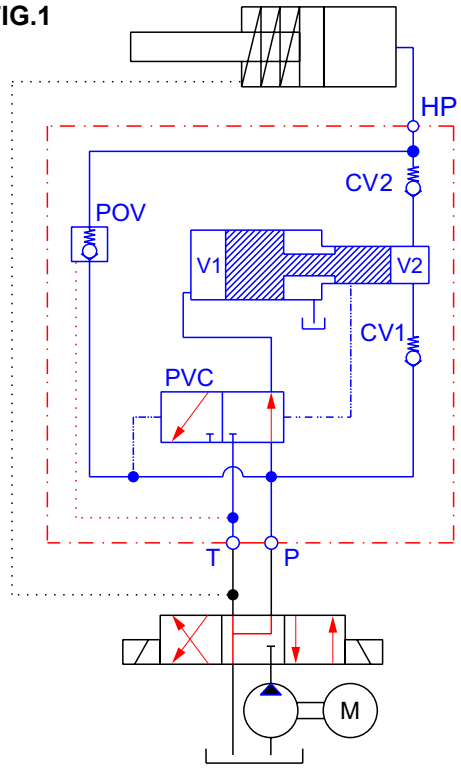

Intensification ratios, flow and pressure settings

Product number*	Intensification ratio	Max. supply Flow** (LPM)	Outlet supply pressure*** (bar)	Average outlet Flow**** (LPM)	Outlet pressure range***** (bar)
MP-T-S/P-1.5-G/U	1.5	15.0	200	0.3	30 - 300
MP-T-S/P-2.0-G/U	2.0	15.0	200	0.5	40 - 400
MP-T-S/P-2.8-G/U	2.8	8.0	200	0.3	56 - 560
MP-T-S/P-3.4-G/U	3.4	15.0	200	0.5	68 - 680
MP-T-S/P-4.0-G/U	4.0	14.0	200	0.4	80 - 800
MP-T-S/P-5.0-G/U	5.0	14.0	160	0.3	100 - 800
MP-T-S/P-7.0-G/U	7.0	13.0	114	0.2	140 - 800
MP-T-S/P-9.0-G/U	9.0	13.0	89	0.1	180 - 800
MP-T-S/P-13.0-G/U	13.0	10.0	61	0.1	260 - 800

* **S** means intensification only, P means the p.o. check valve POV is integrated.
G means all ports are G1/4" ,
U means P and T connections are 7/16"-20 UNF, and the HP connection is 9/16"-18 UNF

** Max. supply flow limits not to be exceeded, as this will damage the internal check valves and over speed the intensifier pistons. Min. supply flow is 2 LPM

*** Max. supply pressure limits not to be exceeded, as this will cause damage to the intensifier parts, and will cause to high outlet pressure.
Pressure spikes must be avoided.

**** The Average flow is the flow generated by the intensifier pistons when increasing the pressure from pump pressure to end pressure. Initially the flow is high, and as the pressure increases the flow decreases and will eventually stop when the end pressure has been reached.

***** The outlet pressure is proportional with the supplied pressure, and can be set at any value within the range.
The max. pressure within the range for each intensification ratio must not be exceeded

MP-M (Low / Medium Pressure)

ScanWill®
More Pressure. More Power



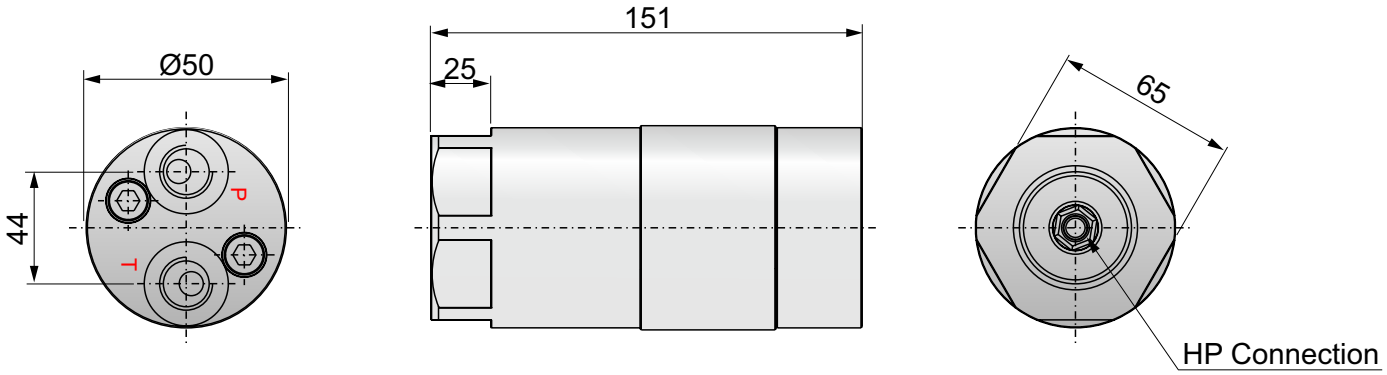

P and T: G3/8" (3/8" BSPP)
HP: G1/2" (1/2" BSPP)

Before installing the intensifier

Ensure the surroundings and the connecting parts are clean and free from burrs.

Fluids

For use with standard hydraulic oils and water glycol (min. 5% glycol).
Preferred viscosity range 20 - 46 cSt

Filtration requirements

10 µm nominal or better, maximum 19/16 according to ISO 4406

Hydraulic bleeding

During start-up of the system, it is recommended to ensure no air is trapped in the system, as this may cause function problems.

Connecting the intensifier

Connecting the MP-M pressure intensifier to a system is only to be done by trained personnel.
1. Connect the P-port of the intensifier to the hydraulic pressure supply.
2. Connect the T-port to the tank line.
3. Connect the HP-port to the end pressure line / cylinder.

CAUTION:
Ensure the fittings and components on the output side are rated for the end pressure delivered by the Scanwill intensifier.

Mounting and connection

The MP-M pressure intensifier can be mounted using a standard pipe clamp. As an accessory a connection plate for mounting the supply side (P & T) to a customer block is offered, see below.

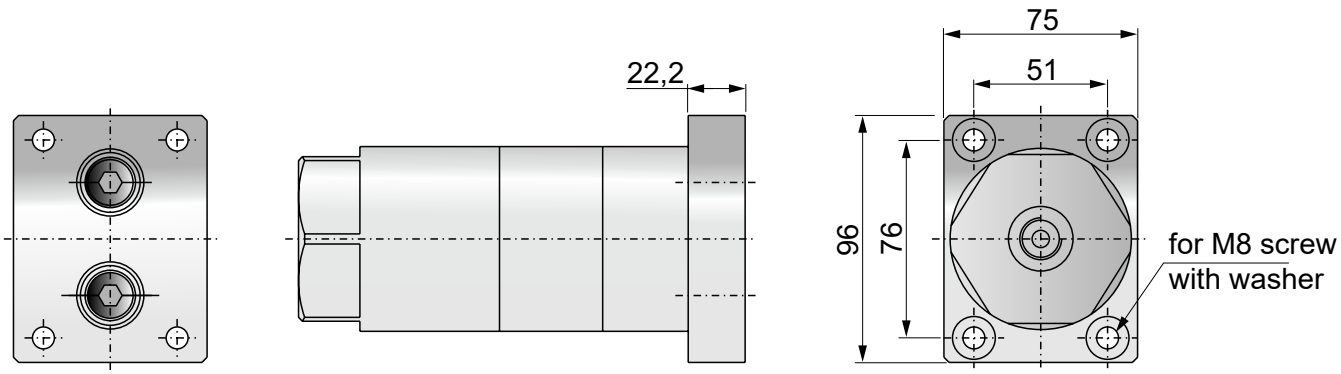

Function

The MP-M is an in-line hydraulic pressure intensifier designed to increase a supplied pump pressure to a higher end pressure (for fluids only). The intensification ratio is fixed, and the end pressure is always proportional with the supplied pressure. Fig. 1 shows the schematic of the MP-M intensifier increasing the pressure in a single or double acting cylinder.
When applying flow to the P-port and connecting the T-port to tank, the full pump flow will go straight through the intensifier check valves CV1, CV2 and POV (optional) to the cylinder, allowing the rod to move out at pump speed. When the cylinder is filled up and the pressure has risen to pump pressure, the intensifier pistons automatically increase the pressure to the set end pressure. Keeping the pump connected ensures the intensifier will automatically work to maintain the end pressure in the cylinder, in case the pressure drops.
If the POV is integrated the cylinder can be retracted by connecting the P-port to tank and the T-port to pump. This will open the POV creating a free passage from the HP-side back to tank.

High Flow Applications

In systems with flow rates larger than permissible for the intensifier, the inlet to the P and T ports must be limited according to the flow pressure table below. To maintain the speed in the cylinder, an external p.o.check valve capable of handling the system flow and end pressure can be inserted in parallel with the MP-M intensifier

FIG.1

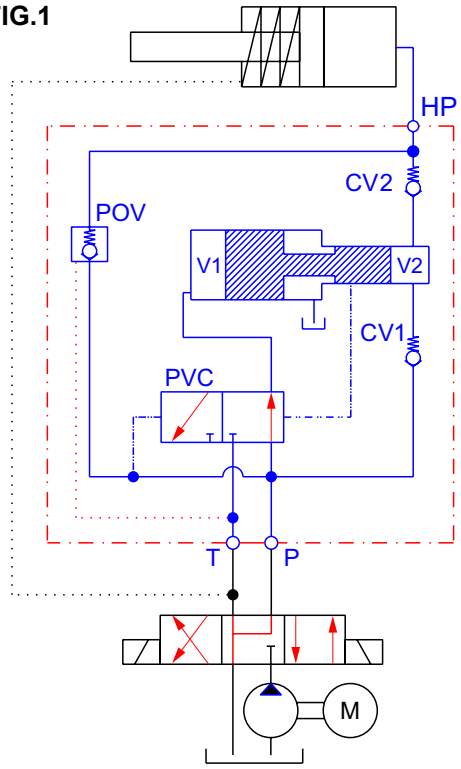

Intensification ratios, flow and pressure settings

Product number*	Intensification ratio	Max. supply Flow** (LPM)	Outlet supply pressure*** (bar)	Average outlet Flow**** (LPM)	Outlet pressure range***** (bar)
MP-M-1.8 / MP-M-1.8-S	1.8	25.0	200	1.5	30 - 360
MP-M-2.1 / MP-M-2.1-S	2.0	25.0	200	1.3	40 - 400
MP-M-2.6 / MP-M-2.6-S	2.6	35.0	200	3.0	56 - 520
MP-M-3.4 / MP-M-3.4-S	3.4	35.0	200	2.8	68 - 680
MP-M-4.0 / MP-M-4.0-S	4.0	35.0	200	2.4	80 - 800
MP-M-5.0 / MP-M-5.0-S	5.0	35.0	160	1.9	100 - 800
MP-M-7.0 / MP-M-7.0-S	7.0	35.0	114	1.3	140 - 800

* As standard the p.o. check valve POV is integrated. Products marked with an -S has no POV integrated.

** Max. supply flow limits not to be exceeded, as this will damage the internal check valves and over speed the intensifier pistons.
Min. supply flow is 3 LPM

*** Max. supply pressure limits not to be exceeded, as this will cause damage to the intensifier parts, and will cause to high outlet pressure.
Pressure spikes must be avoided.

**** The Average flow is the flow generated by the intensifier pistons when increasing the pressure from pump pressure to end pressure. Initially the flow is high, and as the pressure increases the flow decreases and will eventually stop when the end pressure has been reached.

***** The outlet pressure is proportional with the supplied pressure, and can be set at any value within the range. The max. pressure within the range for each intensification ratio must not be exceeded.



For subplate mounting with interface CETOP 3/NG6
according to ISO 4401-03-02 and DIN 24 340

ScanWill®
More Pressure. More Power

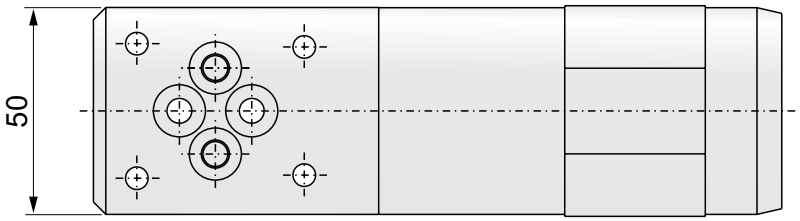

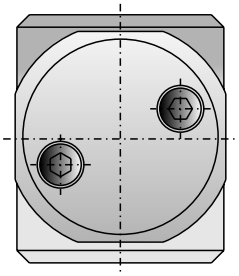

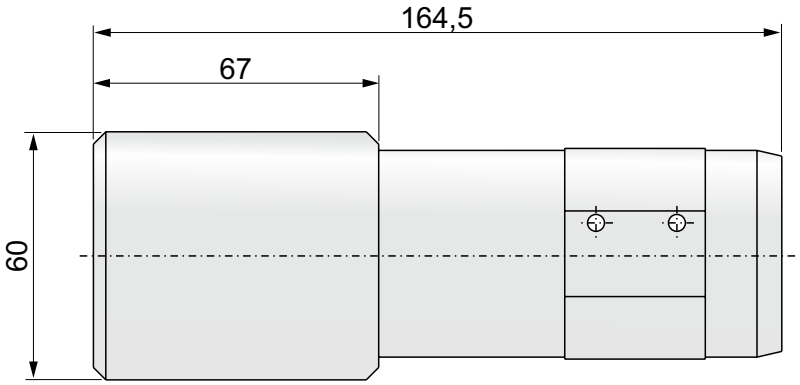

Before installing the intensifier

Ensure the surroundings and the connecting parts are clean and free from burrs.

Filtration requirements

10 µm nominal or better, maximum 19/16 according to ISO 4406

Fluids

For use with standard hydraulic oils and water glycol (min. 5% glycol).
Preferred viscosity range 20 - 46 cSt

Hydraulic bleeding

During start-up of the system, it is recommended to ensure no air is trapped in the system, as this may cause function problems.

Installing the MP-C intensifier

The MP-C is designed for CETOP 3 / NG6 subplate mounting, and should be positioned lowest in the stacking system right on top of the subplate.
Installation to be done by trained personnel only.
A instalação deve ser feita apenas por pessoal treinado.

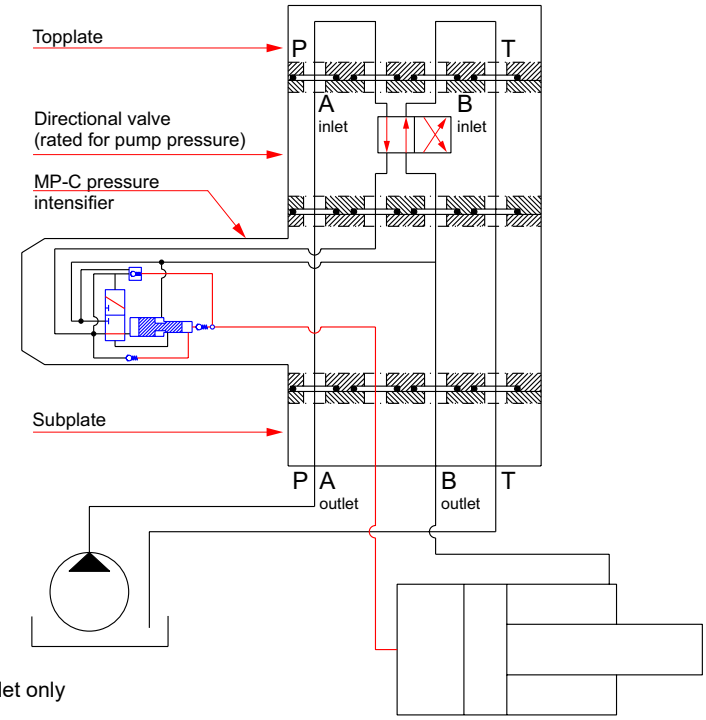

NOTICE:
The end pressure delivered by the MP-C pressure intensifier is present in Aoutlet only

CAUTION:
Ensure the fittings and components on the output side are rated for the end pressure delivered bythe MP-C intensifier.

Function

The MP-C is a subplate mounted hydraulic pressure intensifier designed to increase a supplied pump pressure to a higher end pressure (for fluids only). The intensification ratio is fixed, and the end pressure is always proportional with the supplied pressure. Fig. 1 shows the schematic of the MP-C intensifier increasing the pressure in a single or double acting cylinder. When applying flow to the Ainlet-port and connecting the Binlet port to tank, the full pump flow will go straight through the intensifier check valves CV1, CV2 and POV (optional) through Aoutlet to the cylinder, allowing the rod to move out at pump speed. When the cylinder is filled up and the pressure has risen to pump pressure, the intensifier pistons automatically increase the pressure to the set end pressure. Keeping the pump connected ensures the intensifier will automatically work to maintain the end pressure in the cylinder, in case the pressure drops.

If the POV is integrated the cylinder can be retracted by chaning position on the directional valve positioned above the MP-C pressure intensifier connecting the Ainlet to tank and the Binlet to pump. This will open the POV creating a free passage from the Aoutlet back to tank.

FIG.1

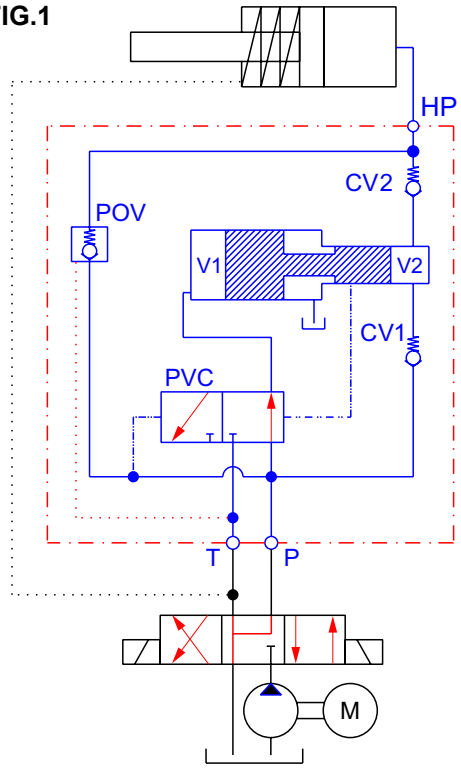

Intensification ratios, flow and pressure settings

Product number*	Intensification ratio	Max. supply Flow** (LPM)	Outlet supply pressure*** (bar)	Average outlet Flow**** (LPM)	Outlet pressure range***** (bar)
MP-C-1.5 / MP-C-1.5-S	1.5	15.0	200	0.3	30 - 300
MP-C-2.0 / MP-C-2.0-S	2.0	15.0	200	0.5	40 - 400
MP-C-2.8 / MP-C-2.8-S	2.8	8.0	179	0.3	56 - 500
MP-C-3.4 / MP-C-3.4-S	3.4	15.0	147	0.5	68 - 500
MP-C-4.0 / MP-C-4.0-S	4.0	14.0	125	0.4	80 - 500
MP-C-5.0 / MP-C-5.0-S	5.0	14.0	100	0.3	100 - 500
MP-C-7.0 / MP-C-7.0-S	7.0	13.0	72	0.2	140 - 500
MP-C-9.0 / MP-C-9.0-S	9.0	13.0	56	0.1	180 - 500

*S means intensification only, no check valve POV is integrated.

** Max. supply flow limits not to be exceeded, as this will damage the internal check valves and over speed the intensifier pistons.
Min. supply flow is 2 LPM

*** Max. supply pressure limits not to be exceeded, as this will cause damage to the intensifier parts, and will cause to high outlet pressure.
Pressure spikes must be avoided.

**** The Average flow is the flow generated by the intensifier pistons when increasing the pressure from pump pressure to end pressure. Initially the flow is high, and as the pressure increases the flow decreases and will eventually stop when the end pressure has been reached.

***** The outlet pressure is proportional with the supplied pressure, and can be set at any value within the range. The max. pressure within the range for each intensification ratio must not be exceeded.

Pressure Intensifier

MP-L (Low / Medium Pressure)



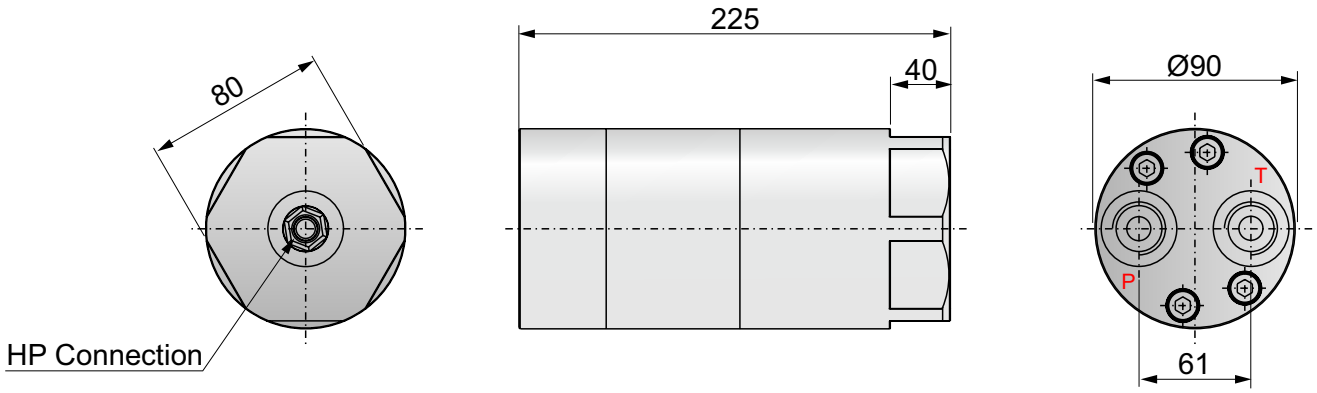

All ports: G1/2" (1/2" BSPP)

Before installing the intensifier

Ensure the surroundings and the connecting parts are clean and free from burrs.

Fluids

For use with standard hydraulic oils and water glycol (min. 5% glycol).
Preferred viscosity range 20 - 46 cSt

Filtration requirements

10 µm nominal or better, maximum 19/16 according to ISO 4406

Hydraulic bleeding

During start-up of the 80 system, it is recommended to ensure no air is trapped in the system, as this may cause function problems.

Connecting the intensifier

Connecting the MP-L pressure intensifier to a system is only to be done by trained personnel.
1. Connect the P-port of the intensifier to the hydraulic pressure supply.
2. Connect the T-port to the tank line.
3. Connect the HP-port to the end pressure line / cylinder.

CAUTION:

Ensure the fittings and components on the output side are rated for the end pressure delivered by the Scanwill intensifier.

Mounting and connection

The MP-L pressure intensifier can be mounted using a standard pipe clamp.

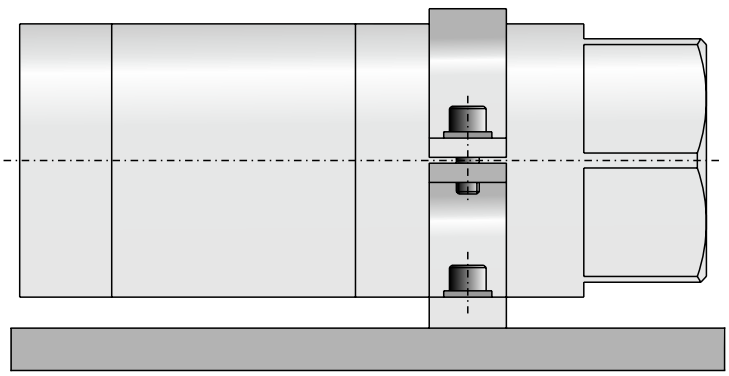

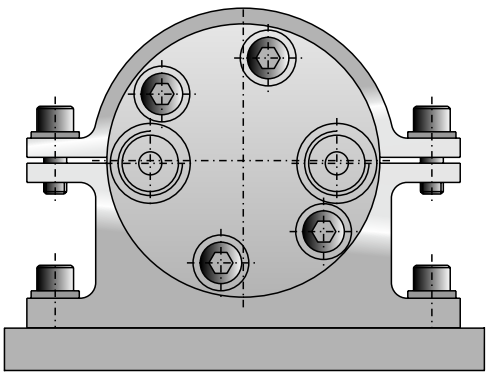

Function

The MP-L is an in-line hydraulic pressure intensifier designed to increase a supplied pump pressure to a higher end pressure (for fluids only). The intensification ratio is fixed, and the end pressure is always proportional with the supplied pressure. Fig. 1 shows the schematic of the MP-L intensifier increasing the pressure in a single or double acting cylinder.
When applying flow to the P-port and connecting the T-port to tank, the full pump flow will go straight through the intensifier check valves CV1, CV2 and POV (optional) to the cylinder, allowing the rod to move out at pump speed. When the cylinder is filled up and the pressure has risen to pump pressure, the intensifier pistons automatically increase the pressure to the set end pressure. Keeping the pump connected ensures the intensifier will automatically work to maintain the end pressure in the cylinder, in case the pressure drops.
The cylinder can be retracted by connecting the P-port to tank and the T-port to pump. This will open the POV creating a free passage from the HP-side back to tank.

High Flow Applications

In systems with flow rates larger than permissible for the intensifier, the inlet to the P and T ports must be limited according to the flow pressure table below. To maintain the speed in the cylinder, an external p.o.check valve capable of handling the system flow and end pressure can be inserted in parallel with the MP-L intensifier

FIG.1

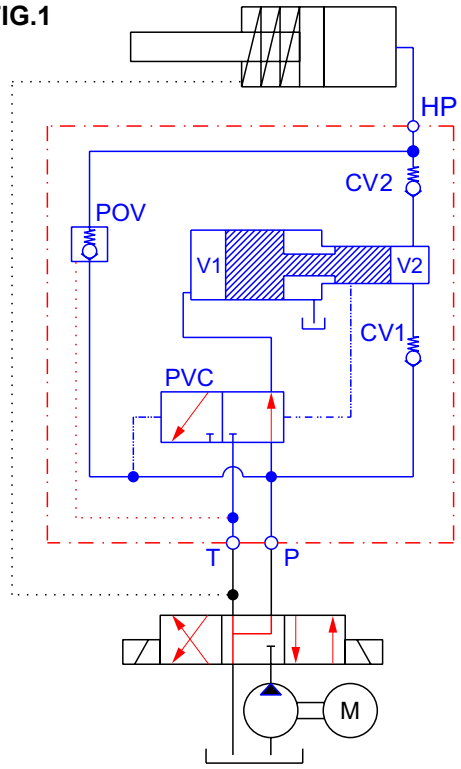

Intensification ratios, flow and pressure settings

Product number*	Intensification ratio	Max. supply Flow** (LPM)	Inlet supply pressure*** (bar)	Average outlet Flow**** (LPM)	Outlet pressure range***** (bar)
MP-L-2.0	2.0	80.0	200	13.0	40 - 400
MP-L-3.4	3.4	80.0	200	13.0	51 - 680
MP-L-4.0	4.0	80.0	200	11.0	80 - 800
MP-L-5.0	5.0	80.0	160	8.0	100 - 800
MP-L-7.0	7.0	80.0	114	6.3	140 - 800

* The MP-L intensifiers have the p.o. check valve POV is integrated.

** Max. supply flow limits not to be exceeded, as this will damage the internal check valves and over speed the intensifier pistons.
Min. supply flow is 8 LPM

*** Max. supply pressure limits not to be exceeded, as this will cause damage to the intensifier parts, and will cause to high outlet pressure.
Pressure spikes must be avoided.

**** The Average flow is the flow generated by the intensifier pistons when increasing the pressure from pump pressure to end pressure. Initially the flow is high, and as the pressure increases the flow decreases and will eventually stop when the end pressure has been reached.

***** The outlet pressure is proportional with the supplied pressure, and can be set at any value within the range. The max. pressure within the range for each intensification ratio must not be exceeded.

ScanWill®
More Pressure. More Power



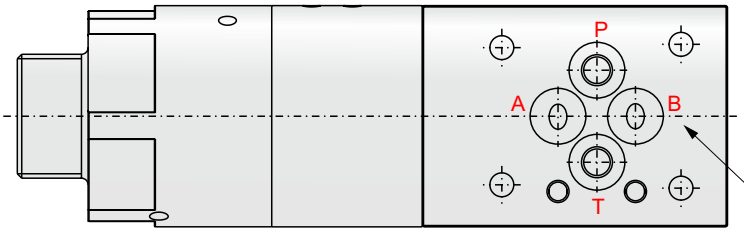

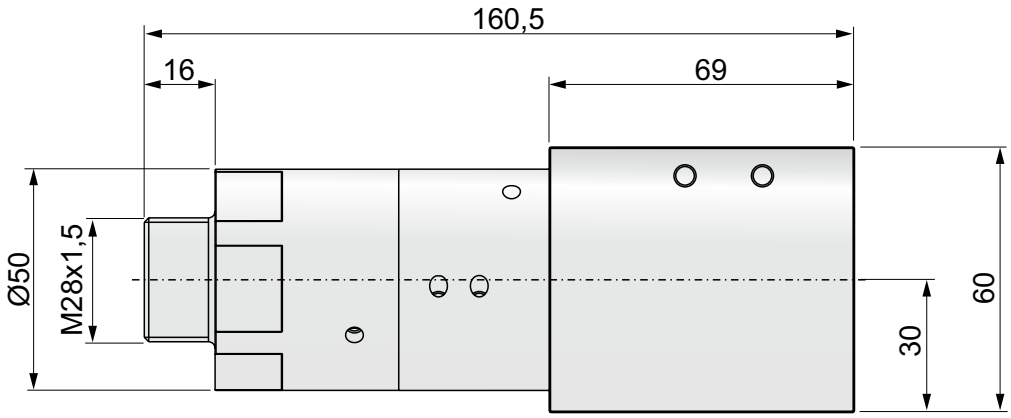

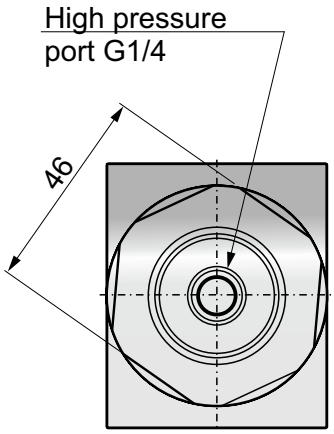

Before installing the intensifier

Ensure the surroundings and the connecting parts are clean and free from burrs.

Filtration requirements

10 µm nominal or better, maximum 19/16 according to ISO 4406

Fluids

For use with standard hydraulic oils and water glycol (min. 5% glycol).
Preferred viscosity range 20 - 46 cSt

Hydraulic bleeding

During start-up of the system, it is recommended to ensure no air is trapped in the system, as this may cause function problems.

Connecting the intensifier

Connecting the MP-CT pressure intensifier to a system is only to be done by trained personnel.
The MP-CT is designed for the cetop D03 (NG6) stacking system. To make the MP-T increase a supplied pressure, the A-port must be connected to the supply pressure and the B-port connected to tank. The HP - port is to be connected to the cylinder/part requiring higher pressure.

CAUTION:
Ensure the fittings and components on the output side are rated for the end pressure delivered by the Scanwill intensifier.

Connecting the intensifier

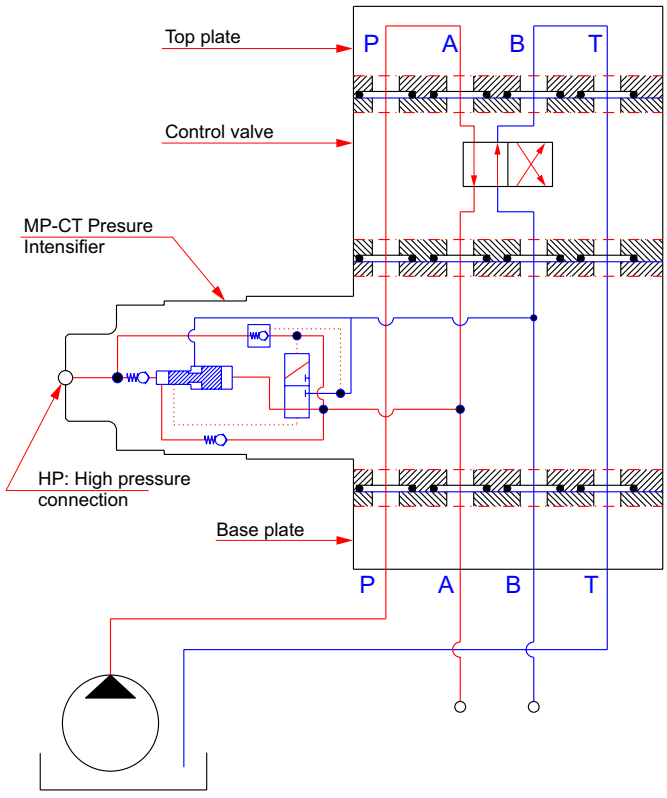

Function

The MP-CT is a hydraulic pressure intensifier designed to be inserted in a CETP 3 /NG6 system, where it will provide a higher output pressure in the HP-port only, the pressure in the CETOP 3 /NG6 system will not be increased. The pressure in port HP will be increased proportionally with the supplied pressure by a fixed factor, the intensification ratio of the specific MP-CT pressure intensifier. The higher pressure can be used to operate a cylinder or tool requiring more pressure than the present system pressure.
The evacuation of the higher pressure can be achieved through a pilot operated checkvalve within the MP-CT. This is opened by switching the pump pressure from port A to port B, thus opening a passage from the high pressure side through the MP-CT pressure intensifier back to tank.

Fig. 1 shows the intensifier circuit of the MP-CT intensifier increasing the pressure in a single or double acting cylinder.
When applying flow to the A-port and connecting the B-port to tank, the full pump flow will go straight through the intensifier check valves CV1, CV2 and POV (optional) to the cylinder, allowing the rod to move out at pump speed. When the cylinder is filled up and the pressure has risen to pump pressure, the intensifier pistons automatically increase the pressure to the set end pressure. Keeping the pump connected ensures the intensifier will automatically work to maintain the end pressure in the cylinder, in case the pressure drops.

If the POV is integrated in the MP-CT pressure intensifier in use, the cylinder can be retracted by connecting the A-port to tank and the B port to pump. This will open the POV creating a free passage from the HP-side back to tank.

FIG.1

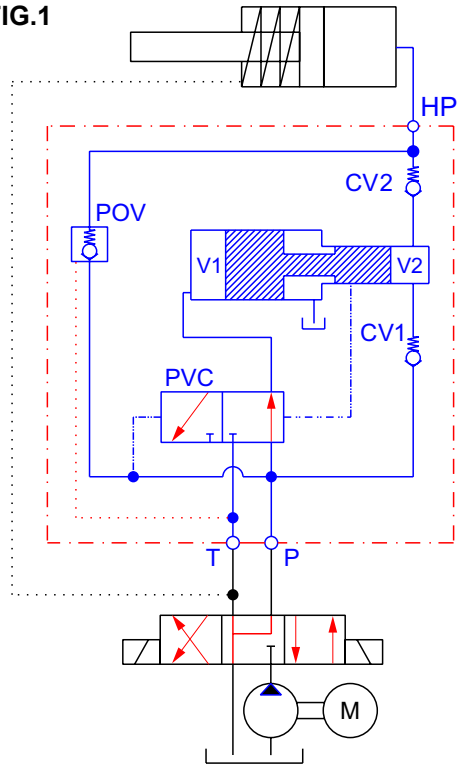

Intensification ratios, flow and pressure settings

Product number*	Intensification ratio	Max. supply Flow** (LPM)	Outlet supply pressure*** (bar)	Average outlet Flow**** (LPM)	Outlet pressure range***** (bar)
MP-CT-S/P-1.5-G/U	1.5	15.0	200	0.3	30 - 300
MP-CT-S/P-2.0-G/U	2.0	15.0	200	0.5	40 - 400
MP-CT-S/P-2.8-G/U	2.8	8.0	200	0.3	56 - 560
MP-CT-S/P-3.4-G/U	3.4	15.0	200	0.5	68 - 680
MP-CT-S/P-4.0-G/U	4.0	14.0	200	0.4	80 - 800
MP-CT-S/P-5.0-G/U	5.0	14.0	160	0.3	100 - 800
MP-CT-S/P-7.0-G/U	7.0	13.0	114	0.2	140 - 800
MP-CT-S/P-9.0-G/U	9.0	13.0	89	0.1	180 - 800
MP-CT-S/P-13.0-G/U	13.0	10.0	61	0.1	260 - 800

*S means intensification only,
P means the p.o. check valve POV for evacuating the high pressure side integrated.

** G: The HP connection is G1/4”
U: The HP connection is G1/4”

*** Max. supply flow limits not to be exceeded, as this will damage the internal check valves and over speed the intensifier pistons.
Min. supply flow is 2 LPM

**** Max. supply pressure limits not to be exceeded, as this will cause damage to the intensifier parts, and will cause to high outlet pressure.
Pressure spikes must be avoided.
The Average flow is the flow generated by the intensifier pistons when increasing the pressure from pump pressure to end pressure. Initially the flow is high, and as the pressure increases the flow decreases and will eventually stop when the end pressure has been reached.

***** The outlet pressure is proportional with the supplied pressure, and can be set at any value within the range.
The max. pressure within the range for each intensification ratio must not be exceeded.

ScanWill®
More Pressure. More Power



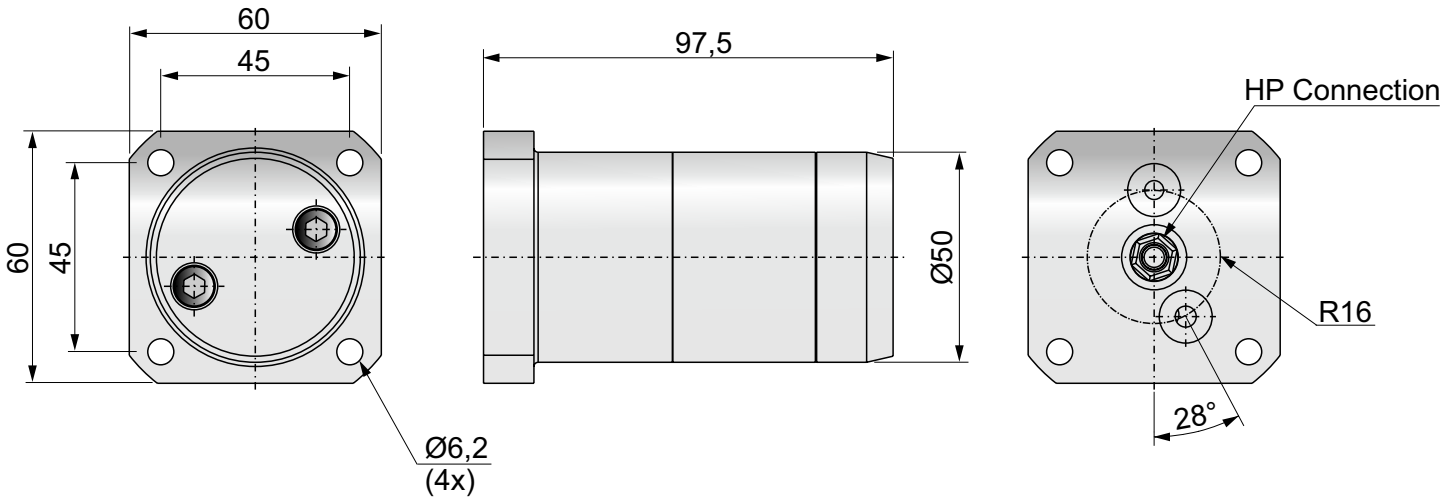

Before installing the intensifier

Ensure the surroundings and the connecting parts are clean and free from burrs.

Fluids

For use with standard hydraulic oils and water glycol (min. 5% glycol). Preferred viscosity range 20 - 46 cSt

Filtration requirements

10 µm nominal or better, maximum 19/16 according to ISO 4406

Hydraulic bleeding

During start-up of the system, it is recommended to ensure no air is trapped in the system, as this may cause function problems.

Seals

HP: Kantseal DKAR00014
P & T: O-ring 9,25x1,78 NBR90

Mounting to a customer block

The MP-F pressure intensifier is designed to be mounted on the side of a hydraulic block. The P and T ports are connected to A and B, and the discharge HP is providing higher pressure back into the block. The MP-F is fixated by 4 x M6 or similar sized screws

CAUTION:

Ensure the fittings and components on the output side are rated for the end pressure delivered by the Scanwill intensifier.

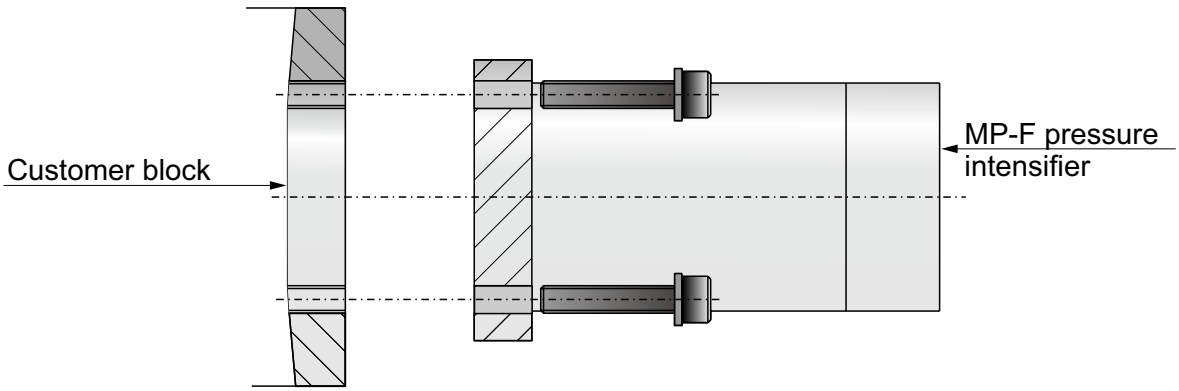

Function

The MP-F is a flange-on hydraulic pressure intensifier designed to increase a supplied pump pressure to a higher end pressure (for fluids only). The intensification ratio is fixed, and the end pressure is always proportional with the supplied pressure. Fig. 1 shows the schematic of the MP-F intensifier increasing the pressure in a single or double acting cylinder.
When applying flow to the P-port and connecting the T-port to tank, the full pump flow will go straight through the intensifier check valves CV1, CV2 and POV (optional) to the cylinder, allowing the rod to move out at pump speed. When the cylinder is filled up and the pressure has risen to pump pressure, the intensifier pistons automatically increase the pressure to the set end pressure. Keeping the pump connected ensures the intensifier will automatically work to maintain the end pressure in the cylinder, in case the pressure drops.
If the POV is integrated the cylinder can be retracted by connecting the P-port to tank and the T-port to pump. This will open the POV creating a free passage from the HP-side back to tank.

FIG.1

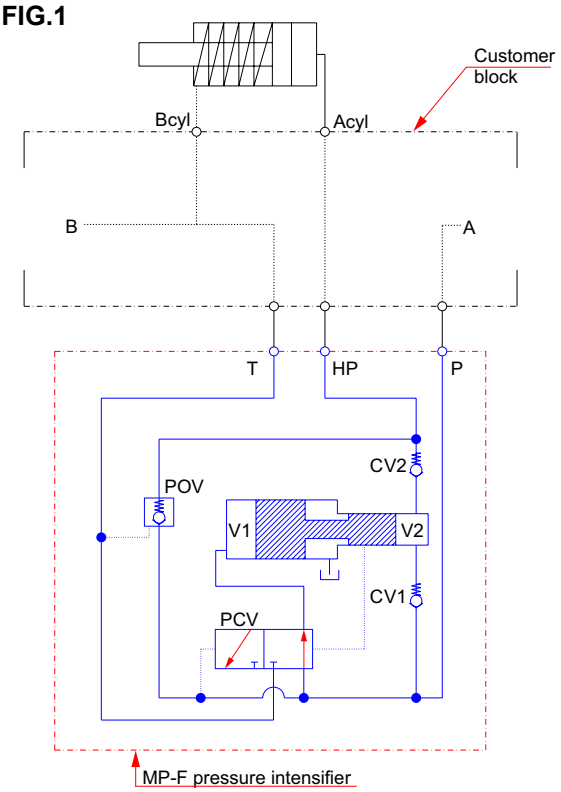

Intensification ratios, flow and pressure settings

Product number*	Intensification ratio	Max. supply Flow** (LPM)	Inlet supply pressure*** (bar)	Average outlet Flow**** (LPM)	Outlet pressure range***** (bar)
MP-F-1.5 / MP-F-1.5-S	1.5	15.0	200	0.3	30 - 300
MP-F-2.0 / MP-F-2.0-S	2.0	15.0	200	0.5	40 - 400
MP-F-2.8 / MP-F-2.8-S	2.8	8.0	200	0.3	56 - 560
MP-F-3.4 / MP-F-3.4-S	3.4	15.0	200	0.5	68 - 680
MP-F-4.0 / MP-F-4.0-S	4.0	14.0	175	0.4	80 - 700
MP-F-5.0 / MP-F-5.0-S	5.0	14.0	140	0.3	100 - 700
MP-F-7.0 / MP-F-7.0-S	7.0	13.0	100	0.2	140 - 700
MP-F-9.0 / MP-F-9.0-S	9.0	13.0	78	0.1	180 - 700

* S means intensification only, (no p.o. check valve POV is integrated)

** Max. supply flow limits not to be exceeded, as this will damage the internal check valves and over speed the intensifier pistons.
Min. supply flow is 2 LPM

*** Max. supply pressure limits not to be exceeded, as this will cause damage to the intensifier parts, and will cause to high outlet pressure.
Pressure spikes must be avoided.

**** The Average flow is the flow generated by the intensifier pistons when increasing the pressure from pump pressure to end pressure. Initially the flow is high, and as the pressure increases the flow decreases and will eventually stop when the end pressure has been reached.

***** The outlet pressure is proportional with the supplied pressure, and can be set at any value within the range.
The max. pressure within the range for each intensification ratio must not be exceeded.

Pressure Intensifier

MP-2000 (High Pressure)



ScanWill®
More Pressure. More Power

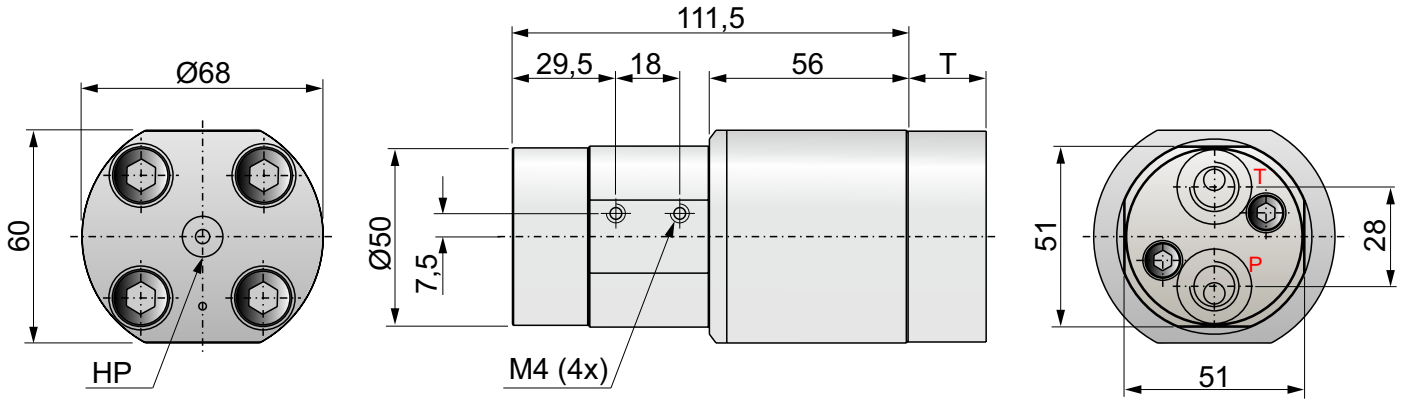

Port sizes
P and T: G1/4" (1/4" BSPP) or 7/16"-20 UNF
HP: See below

Before installing the intensifier

Ensure the surroundings and the connecting parts are clean and free from burrs.

Fluids

For use with standard hydraulic oils and water glycol (min. 5% glycol).
Preferred viscosity range 20 - 46 cSt

Filtration requirements

10 µm nominal or better, maximum 19/16 according to ISO 4406

Hydraulic bleeding

During start-up of the system, it is recommended to ensure no air is trapped in the system, as this may cause function problems.

Connecting the intensifier

Connecting the MP-2000 pressure intensifier to a system is only to be done by trained personnel.
1. Connect the P-port of the intensifier to the hydraulic pressure supply.
2. Connect the T-port to the tank line.
3. Connect the HP-port to the end pressure line /cylinder.

Mounting and connection

The MP-2000 pressure intensifier can be mounted using a standard pipe clamp. Alternatively the accessories below for fixating and connecting the intensifier are available.



Mounting brackets for base plate



Connection kit for block mounting

HP-Port sizes

The HP port (outlet pressure) has several options, all of them sealing at a cone at the end of the bore. Most common are:
9/16"-18 UNF with 60° cone sealing and
G1/4" (1/4" BSPP) with 120° cone sealing

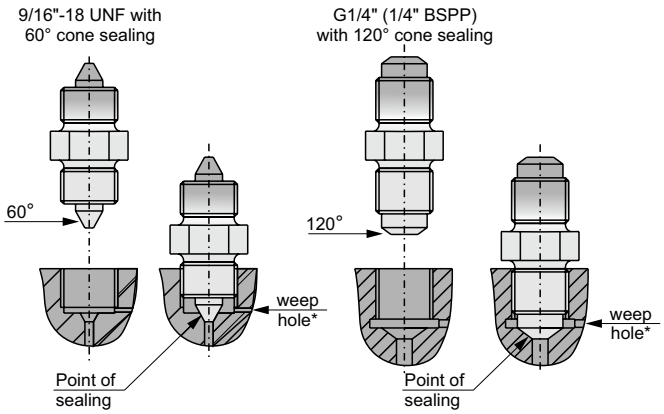

* The weep hole is a safety measure to ensure the full high pressure is not acting on the thread. If oil/fluid is comming out of the weep hole, this is a sign that the connection is loose, and needs to be tightened.

gepef

Pressure Intensifier

MP-2000 (High Pressure)

Function

The MP-2000 is an in-line hydraulic pressure intensifier designed to increase a supplied pump pressure to a higher end pressure (for fluids only). The intensification ratio is fixed, and the end pressure is always proportional with the supplied pressure. Fig. 1 shows the schematic of the MP-2000 intensifier increasing the pressure in a single or double acting cylinder.

When applying flow to the P-port and connecting the T-port to tank, the full pump flow will go straight through the intensifier check valves CV1, CV2 and POV (optional) to the cylinder, allowing the rod to move out at pump speed. When the cylinder is filled up and the pressure has risen to pump pressure, the intensifier pistons automatically increase the pressure to the set end pressure. Keeping the pump connected ensures the intensifier will automatically work to maintain the end pressure in the cylinder, in case the pressure drops.

If the POV is integrated the cylinder can be retracted by connecting the P-port to tank and the T-port to pump. This will open the POV creating a free passage from the HP-side back to tank.

High Flow Applications

In systems with flow rates larger than permissible for the intensifier, the inlet to the P and T ports must be limited according to the flow pressure table below. To maintain the speed in the cylinder, an external p.o.check valve capable of handling the system flow and end pressure can be inserted in parallel with the MP-2000 hydraulic pressure intensifier

FIG.1

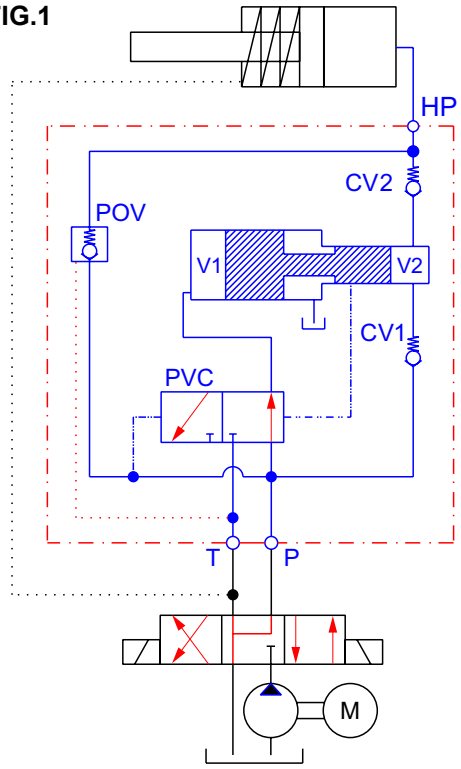

Intensification ratios, flow and pressure settings

Product number*	Intensification ratio	Max. supply Flow** (LPM)	Outlet supply pressure*** (bar)	Average outlet Flow**** (LPM)	Outlet pressure range***** (bar)
MP-2000-S-P-7.0	7.0	13.0	200	0.2	140 - 1,400
MP-2000-S-P-10.0	10.0	12.0	200	0.2	200 - 2,000
MP-2000-S-P-13.0	13.0	10.0	200	0.1	260 - 2,600
MP-2000-S-P-16.0	16.0	10.0	188	0.1	320 - 3,000

* S means intensification only, P means the p.o. check valve POV is integrated.

** Max. supply flow limits not to be exceeded, as this will damage the internal check valves and over speed the intensifier pistons.
Min. supply flow is 2 LPM

*** Max. supply pressure limits not to be exceeded, as this will cause damage to the intensifier parts, and will cause to high outlet pressure.
Pressure spikes must be avoided.

**** The Average flow is the flow generated by the intensifier pistons when increasing the pressure from pump pressure to end pressure. Initially the flow is high, and as the pressure increases the flow decreases and will eventually stop when the end pressure has been reached.

***** The outlet pressure is proportional with the supplied pressure, and can be set at any value within the range.
The max. pressure within the range for each intensification ratio must not be exceeded.

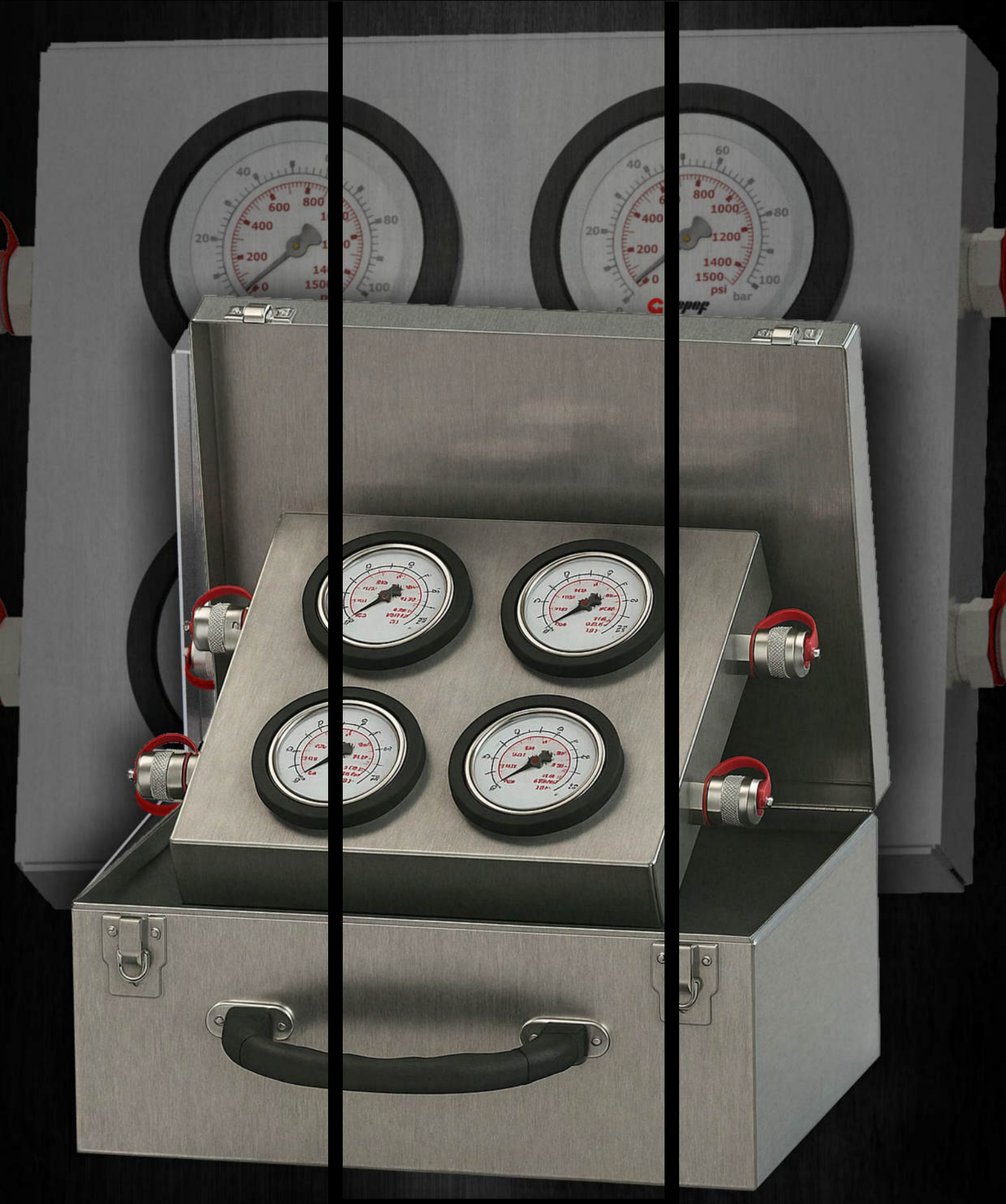

gepef

Pressure Test Kits

PRESSURE TEST KITS

Compact, lightweight, and easy to handle, designed for testing hydraulic and pneumatic circuits during maintenance of tractors, cranes, agricultural and mining equipment, offshore applications, etc.
Features an internal aluminum tray with a magnetic base and a handle, allowing secure attachment to any metallic surface.

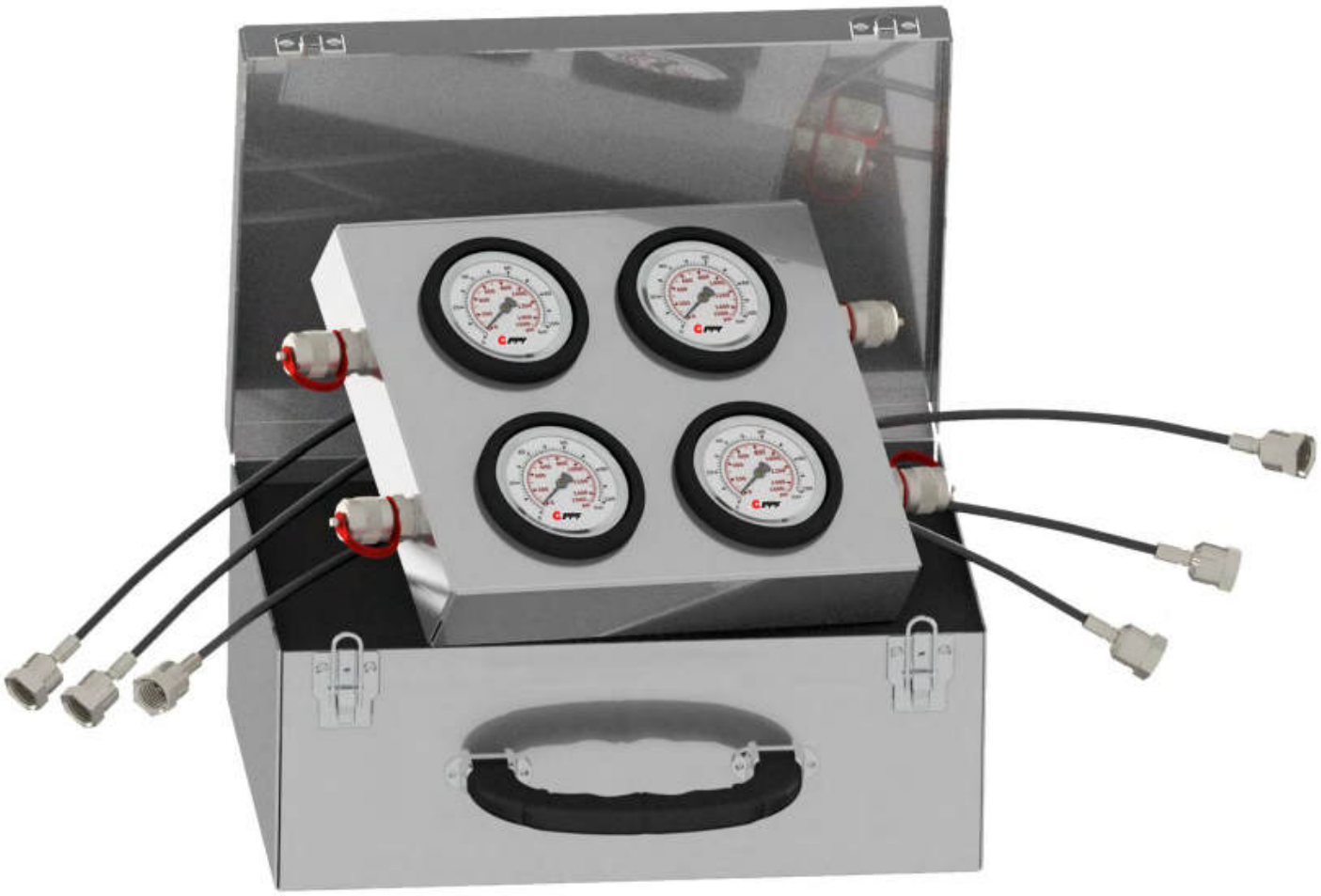

Technical Specifications	
Available with **1 to 8 pressure gauges**	**Capillary hoses according to required length**
May include different pressure test points	**Special adapters to suit any type of equipment**
Integrated selector valve (optional)	**Dual scale: Pressure in bar / PSI**
Warranty: 12 months against manufacturing defects	**National technology**
Technical support and spare parts available in Brazil	**Manufactured in Brazil: GEPEF**

Optional Items (upon request)
Synthetic fabric shoulder bag
Capillary hoses
Pressure test points with alternative thread types

Pressure Test Kit

MALM-02

Carrying case with two GEPEF pressure gauges or vacuum gauges, scale selectable by the customer. Hoses, pressure test points, quick couplings, and accessories are supplied according to each customer's specific requirements.

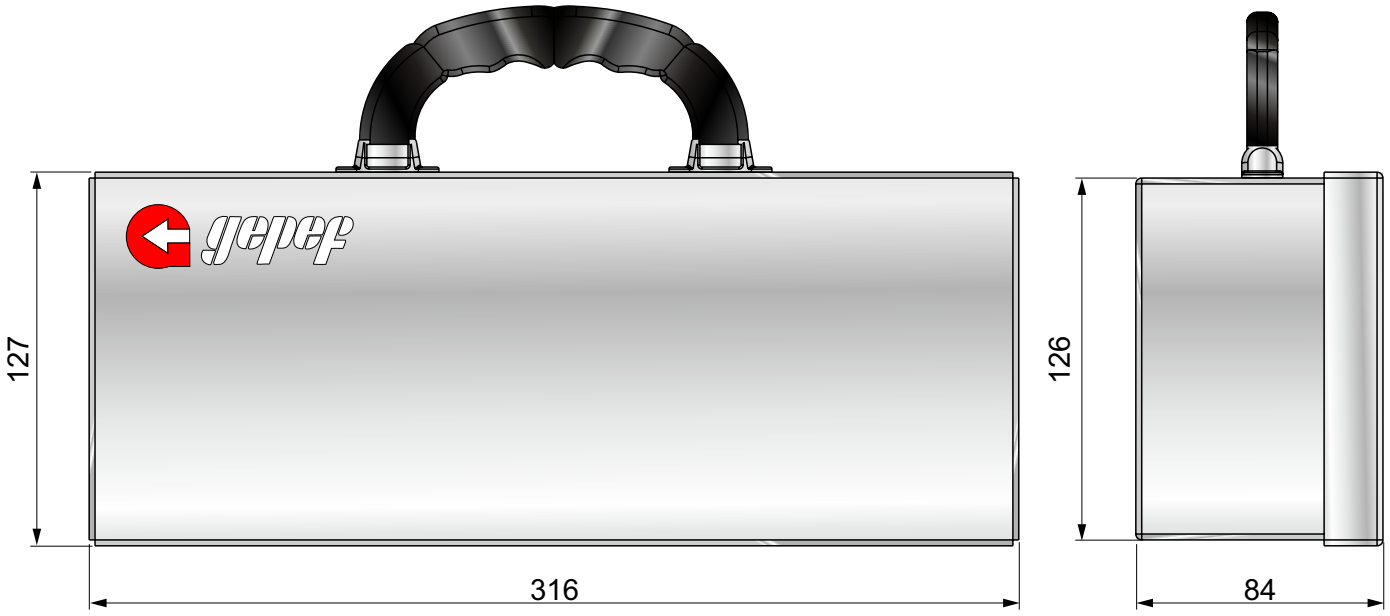

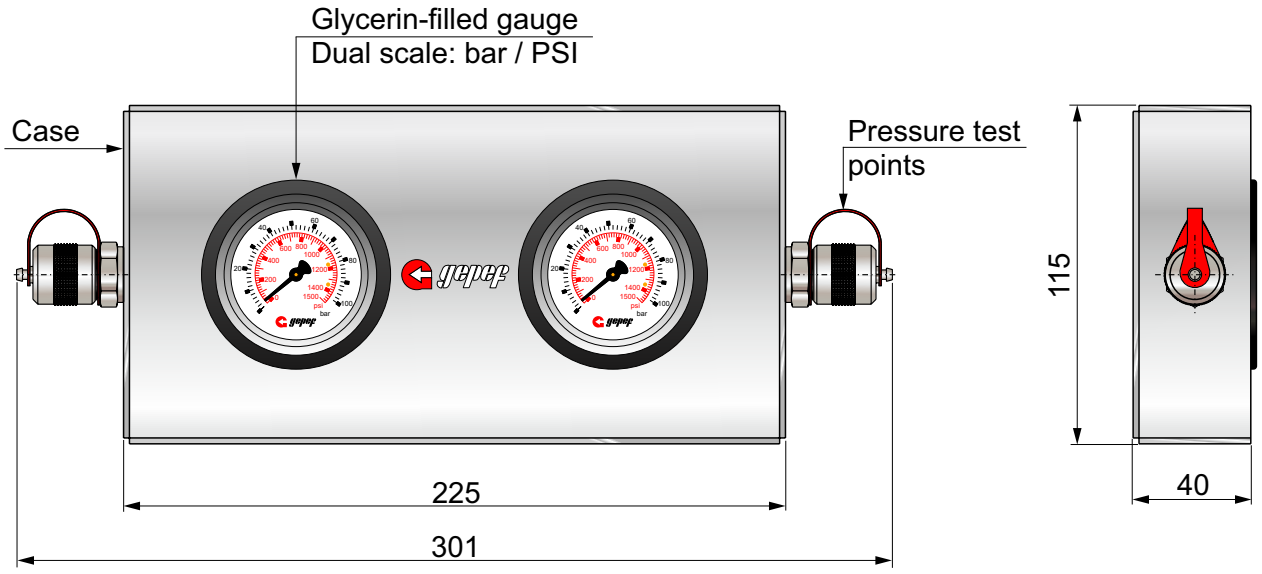

Pressure Test Kit

MALM-03

Carrying case with three GEPEF pressure gauges or vacuum gauges, scale selectable by the customer. Hoses, pressure test points, quick couplings, and accessories are supplied according to each customer's specific requirements.

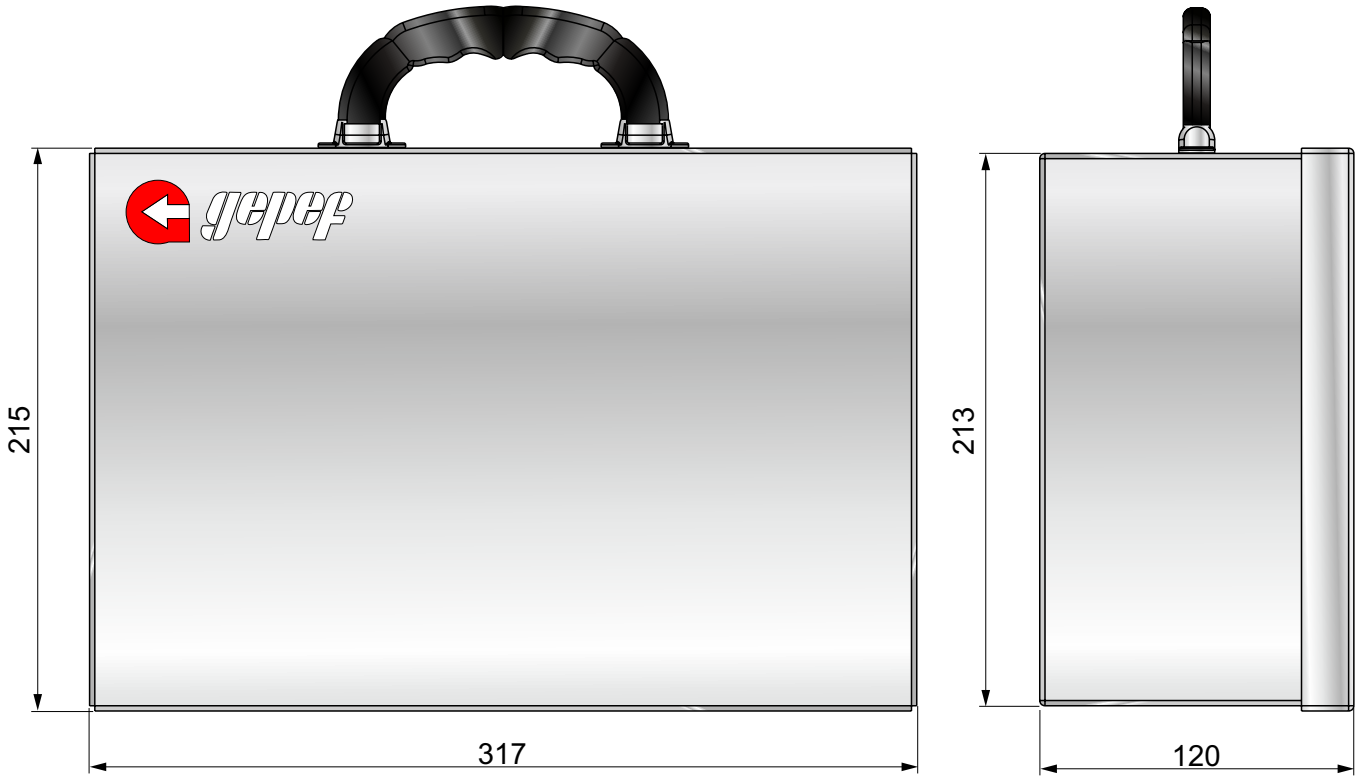

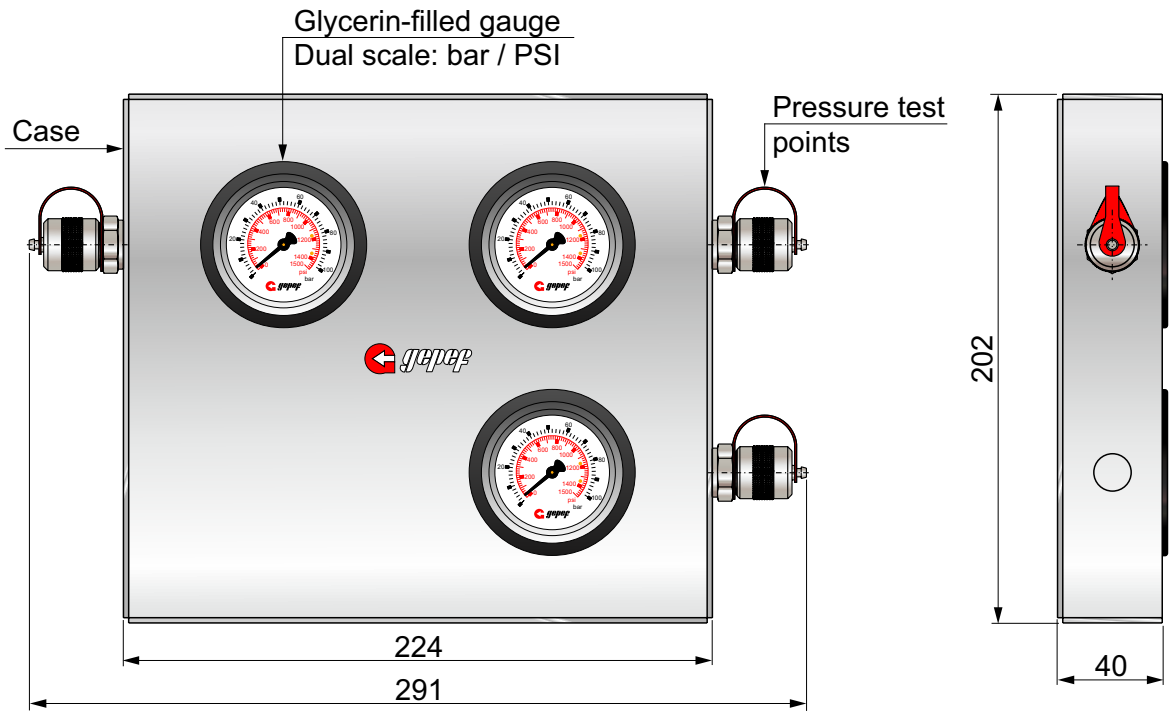

Pressure Test Kit

MALM-04

Carrying case with four GEPEF pressure gauges or vacuum gauges, scale selectable by the customer. Hoses, pressure test points, quick couplings, and accessories are supplied according to each customer's specific requirements.

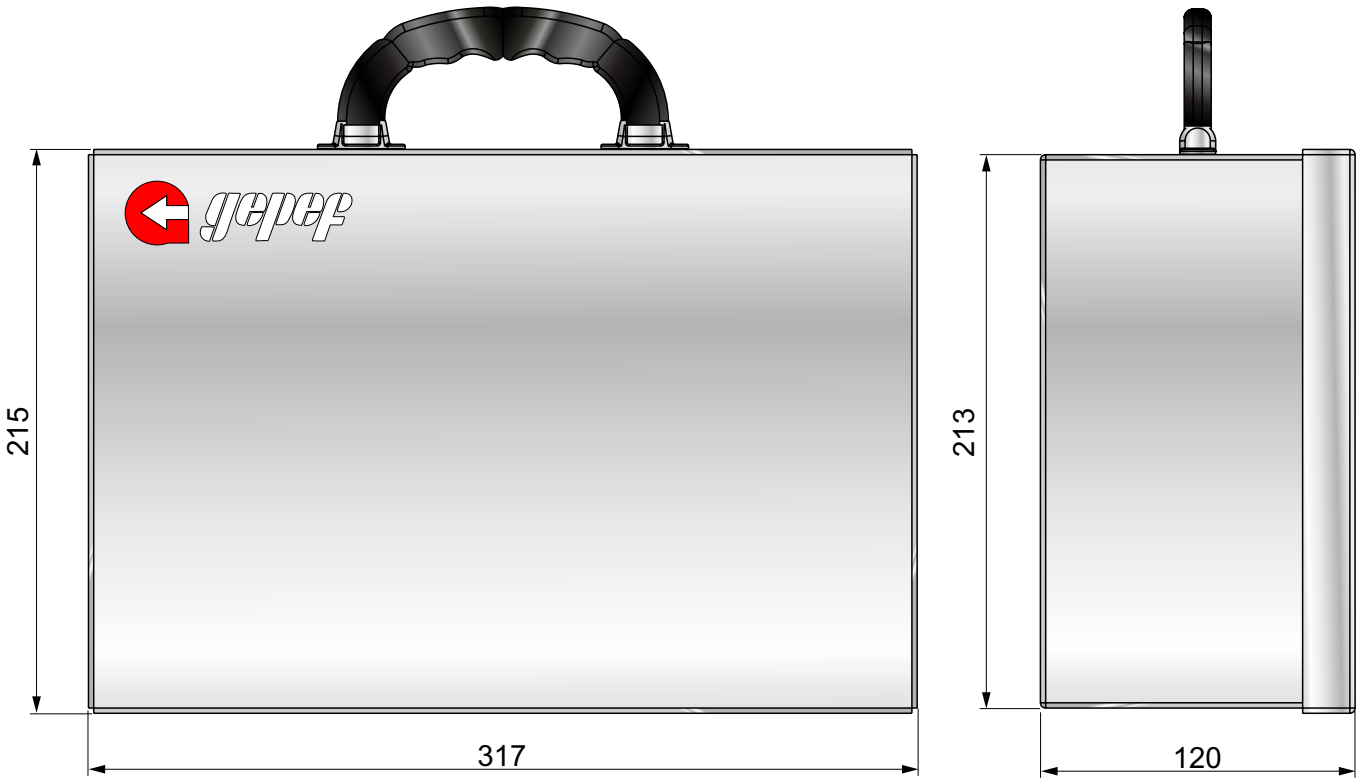

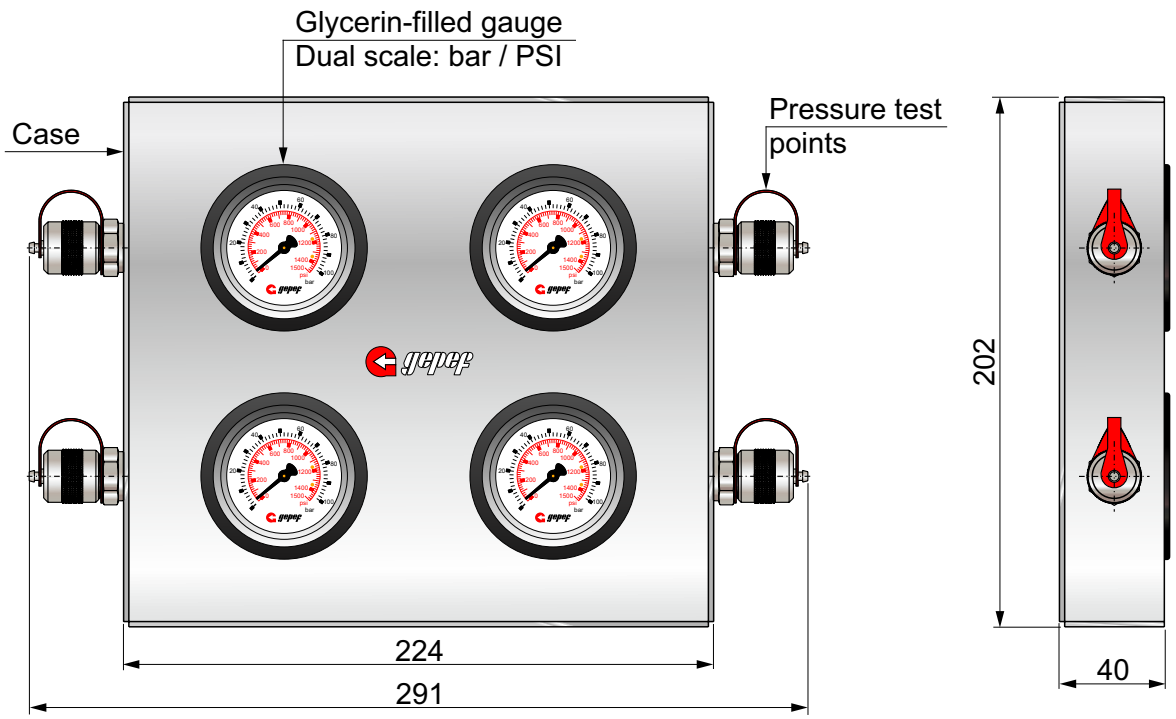

Pressure Test Kit

MALM-05

Carrying case with five GEPEF pressure gauges or vacuum gauges, scale selectable by the customer. Hoses, pressure test points, quick couplings, and accessories are supplied according to each customer's specific requirements.

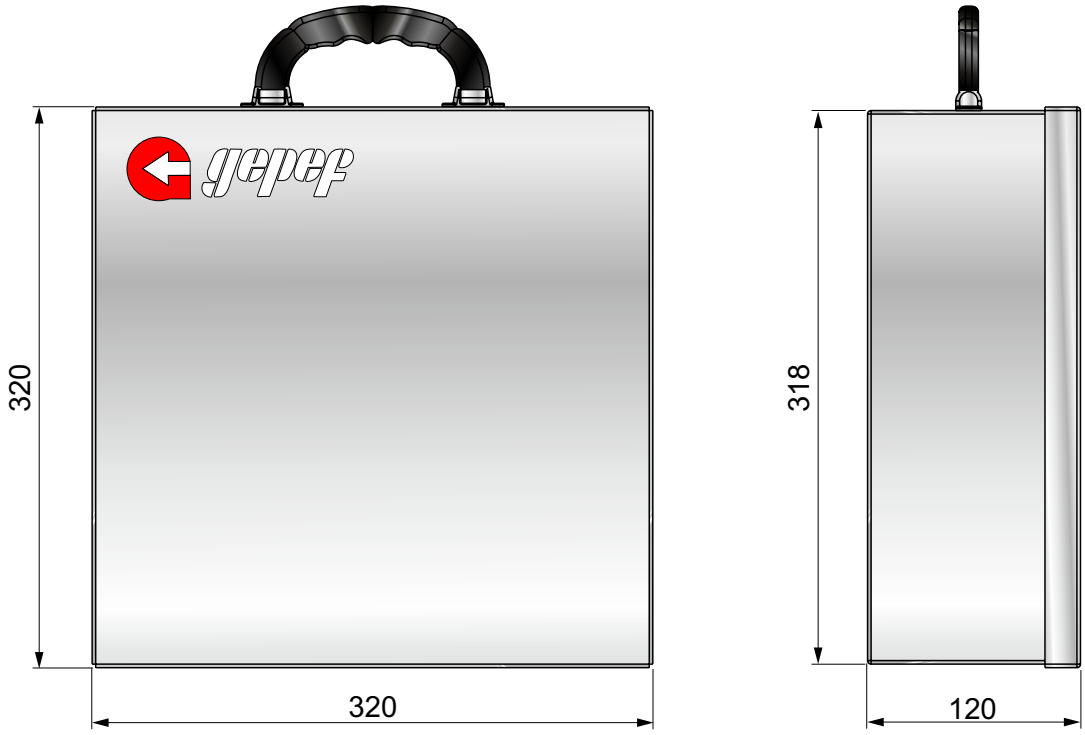

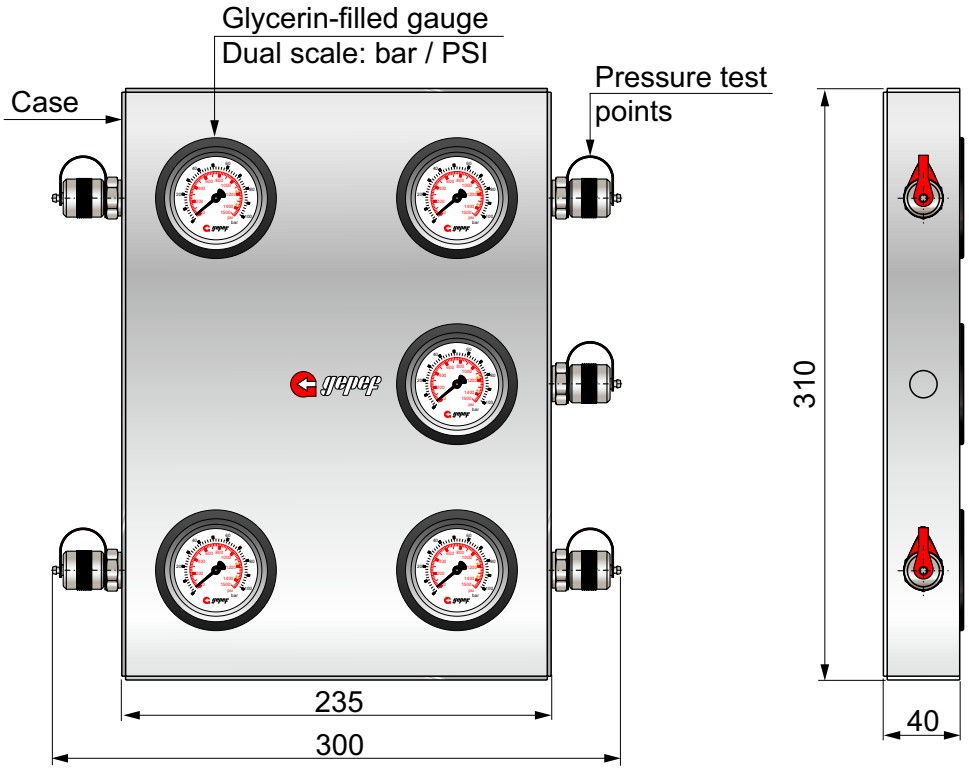

Pressure Test Kit

MALM-06

Carrying case with six GEPEF pressure gauges or vacuum gauges, scale selectable by the customer. Hoses, pressure test points, quick couplings, and accessories are supplied according to each customer's specific requirements.

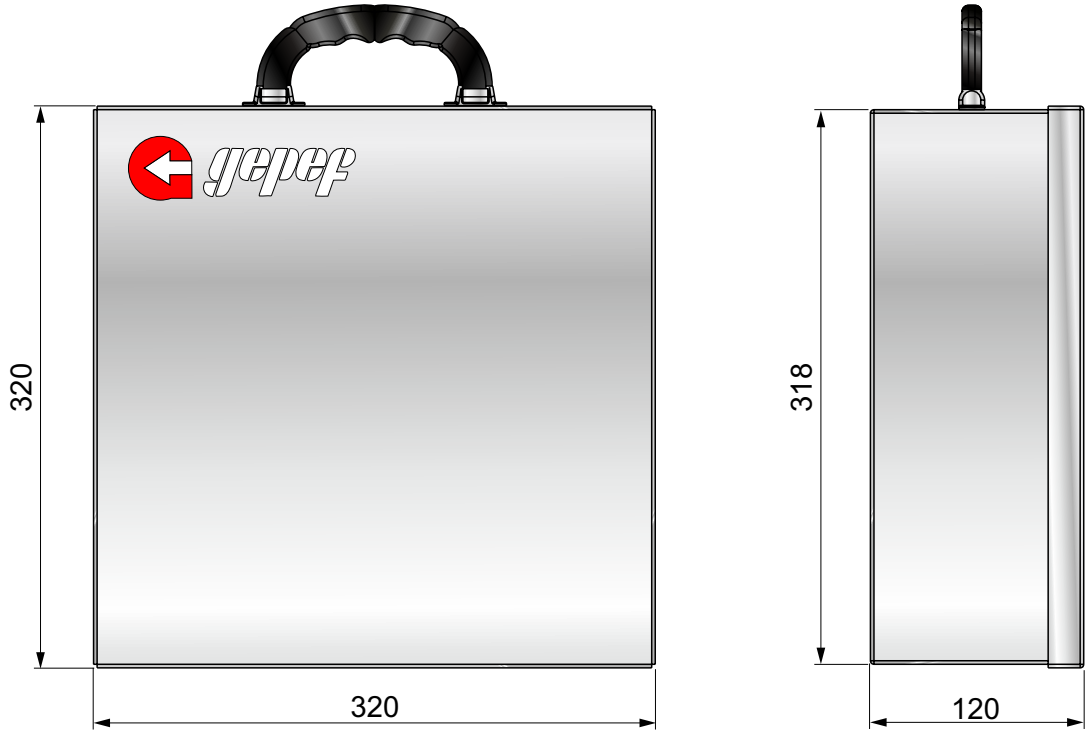

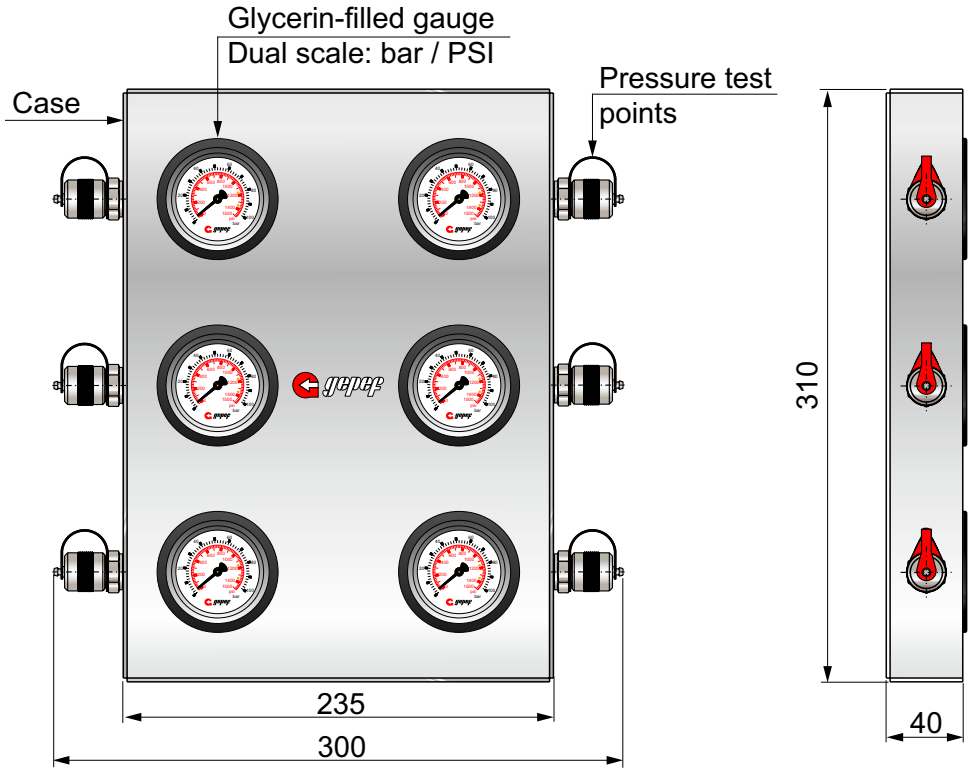

Pressure Test Kit

MALM-MIX

Carrying case with six GEPEF pressure gauges or vacuum gauges and two digital pressure gauges.

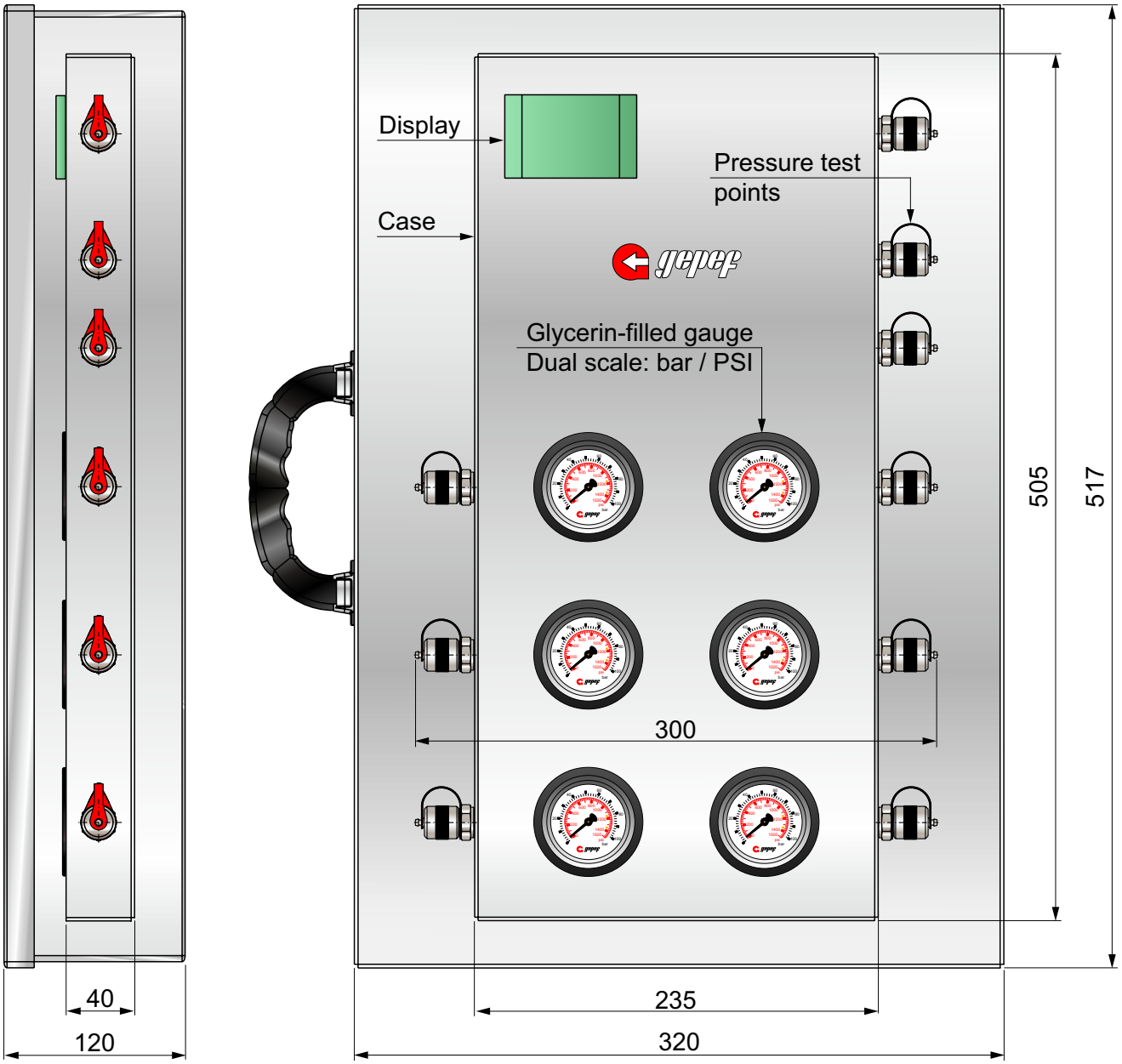

Technical Specifications	
Available with 2 digital pressure gauges	Peak pressure recording
Measurement hold / freeze on display	Differential pressure measurement between two channels (A–B)
Backlit display for low-light or night measurements	Available with 6 analog pressure gauges
Capillary hoses customized to length	Multiple pressure test point options
Integrated selector valve (optional)	Integrated selector valve (and/or)
Dual scale (Pressure: bar / PSI)	Warranty: 12 months against manufacturing defects
National technology	Technical support and spare parts available in Brazil
Manufactured in Brazil: GEPEF	Optional Items (upon request)



gepef

Capillary Hoses

www.gepef.com.br

CAPILLARY HOSES

Capillary test hose specially developed for pressure measurement, diagnostic testing, monitoring and fluid transmission under high pressure.
The hose is dimensionally stable, free from deformation or volumetric variation, and provides excellent flexibility with a reduced bending radius, ensuring accuracy and reliability during pressure tests.
It is suitable for hydraulic and pneumatic diagnostic systems, pressure monitoring applications and functional testing.
The capillary test hose can be supplied with a wide range of ends of fittings manufactured in carbon steel or stainless steel.
All ends of fittings marketed by GEPEF are manufactured in-house. If the required configuration is not listed in this catalog, please contact our technical department.

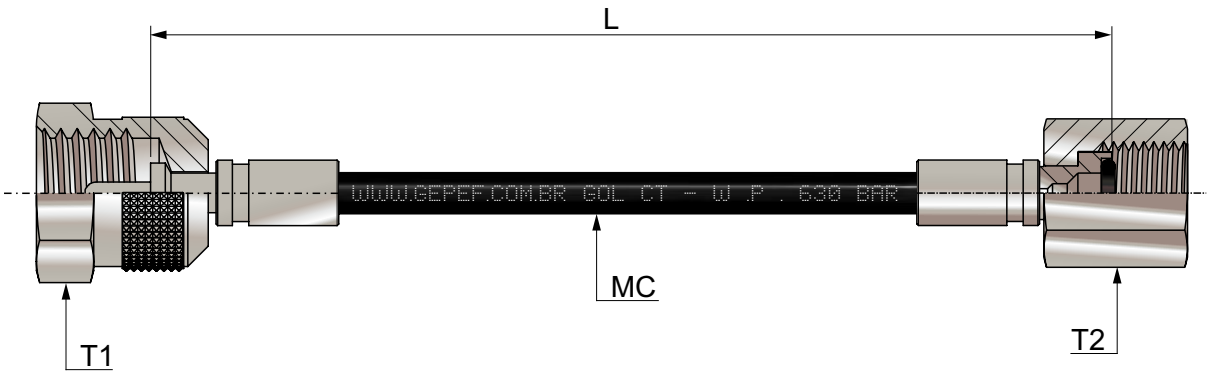

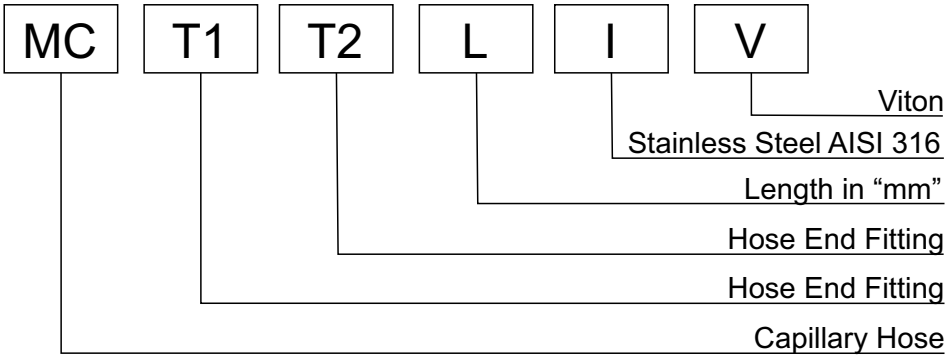

Ø Internal Diameter	Nominal Working Pressure
2 mm	630 bar / 9138 PSI

Ø External Diameter	Minimum Burst Pressure
5 mm	1890 bar / 27412 PSI

Minimum Bending Radius	Operating Temperature Range
20 mm	-40°C to +100°C / (-40°F to +212°F) - Maximum operating temperature with air, water and water-based fluids: +70°C (158°F)

Weight	Vacuum Rating
19	0.93 bar ; 700 mm Hg

Coding example:
MC P M16x2 - E G1/4 BSP x 1.000mm (Capillary Hose with P M16x2 and E G1/4 BSP End Fittings, 1000 mm Length)
For AISI 316 stainless steel, add the letter I at the end of the code.
For Viton (FKM) or EPDM seals, add the letter V or E at the end of the code.
If another type of hose or fitting not listed in this catalog is required, please contact our technical department.

Technical Description	End of Fitting Type	Thread T	S	D
With pin to open and close the pressure test point valve	P	M16x2	19	
		M16x1,5	19	
		S12,65x1,5	5/8”	

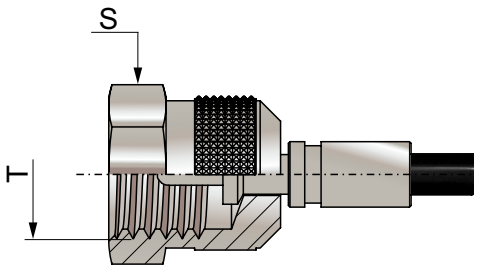

Technical Description	End of Fitting Type	Thread T	S	D
With pin to open and close the pressure test point valve	P 90°	M16x2	19	
		M16x1,5	19	
		S12,65x1,5	5/8”	

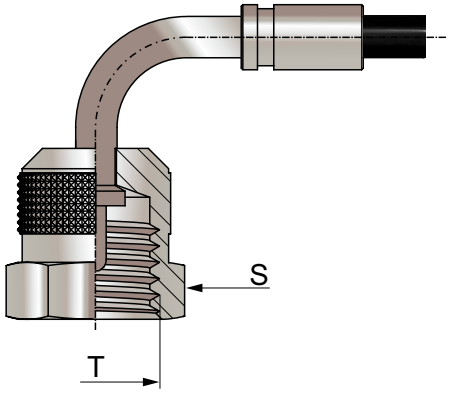

Technical Description	End of Fitting Type	Thread T	S	D
Straight Stub End DIN 2353	D			4
				6
				8
				10
				12
				1/4

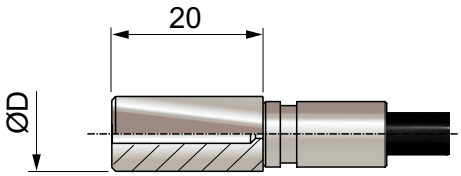

Technical Description	End of Fitting Type	Thread T	S	D
Straight Stub End DIN 2353	D 90°			4
				6
				8
				10
				12
				1/4

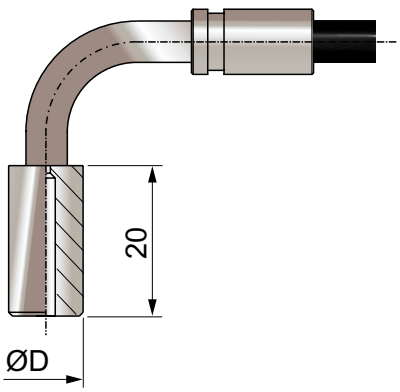

E / E90° / F / F90°

Technical Description	End of Fitting Type	Thread T	S	D
Swivel female for pressure gauges (EN 837-1)	E	G1/4 BSP	17	
		G1/2 BSP	27	
		M20x1,5	24	
		M14x1,5	17	

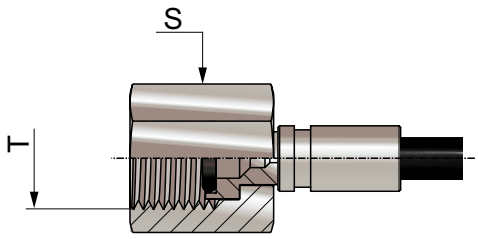

Technical Description	End of Fitting Type	Thread T	S	D
Swivel female for pressure gauges (EN 837-1)	E 90°	G1/4 BSP	17	
		G1/2 BSP	27	
		M20x1,5	24	
		M14x1,5	17	

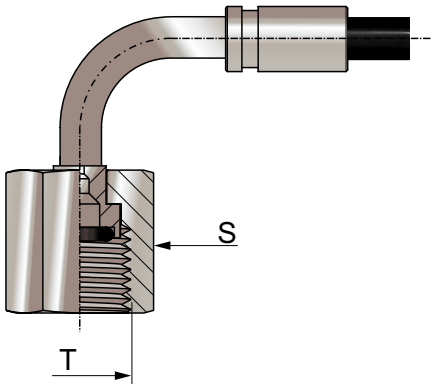

Technical Description	End of Fitting Type	Thread T	S	D
Swivel female / DKO 24° DIN 2353	F	M8x1	10	4LL
		M10x1	14	5L
		M12x1,5	14	6L
		M14x1,5	17	8L
		M16x1,5	19	10L
		M18x1,5	22	12L
		M14x1,5	17	6S
		M16x1,5	19	8S
		M18x1,5	22	10S
		M20x1,5	24	12S

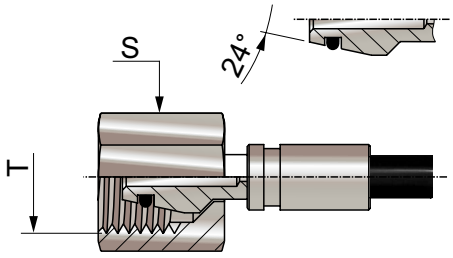

Technical Description	End of Fitting Type	Thread T	S	D
Swivel female / DKO 24° DIN 2353	F 90°	M8x1	10	4LL
		M10x1	14	5L
		M12x1,5	14	6L
		M14x1,5	17	8L
		M16x1,5	19	10L
		M18x1,5	22	12L
		M14x1,5	17	6S
		M16x1,5	19	8S
		M18x1,5	22	10S
		M20x1,5	24	12S

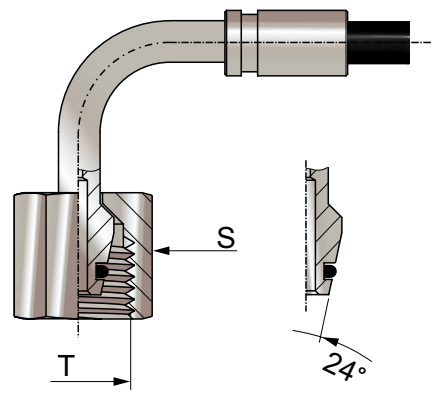

Technical Description	End of Fitting Type
Swivel female beaded DKO 24° DIN 2353	G

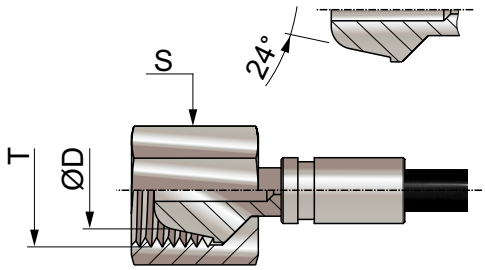

Thread T	S	D
M8x1	10	4LL
M10x1	14	5L
M12x1,5	14	6L
M14x1,5	17	8L
M16x1,5	19	10L
M18x1,5	22	12L
M14x1,5	17	6S
M16x1,5	19	8S
M18x1,5	22	10S
M20x1,5	24	12S

Technical Description	End of Fitting Type
Swivel female beaded DKO 24° DIN 2353	G 90°

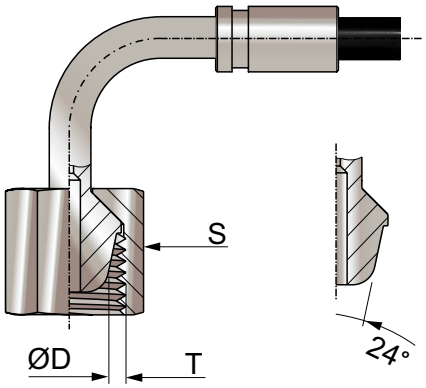

Thread T	S	D
M8x1	10	4LL
M10x1	14	5L
M12x1,5	14	6L
M14x1,5	17	8L
M16x1,5	19	10L
M18x1,5	22	12L
M14x1,5	17	6S
M16x1,5	19	8S
M18x1,5	22	10S
M20x1,5	24	12S

Technical Description	End of Fitting Type
Fixed female NPT / BSPT ANSI / ASM E B 1.20.1 - NBR 12912	I

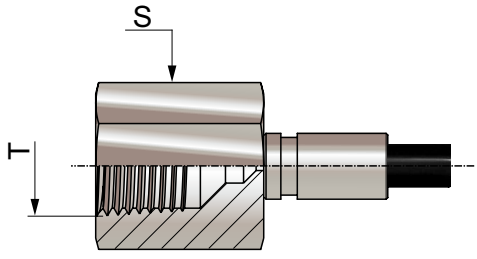

Thread T	S	D
1/8 NPT	17	
1/4 NPT	19	
3/8 NPT	22	
1/2 NPT	27	
1/8 BSPT	17	
1/4 BSPT	19	

Technical Description	End of Fitting Type
Fixed female NPT / BSPT ANSI / ASM E B 1.20.1 - NBR 12912	I 90°

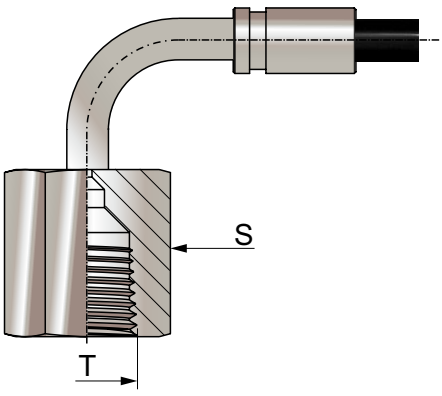

Thread T	S	D
1/8 NPT	17	
1/4 NPT	19	

Technical Description	End of Fitting Type	Thread T	S	D
Swivel female UNF-ORFS SAE J 1453 / ISO 8434-3	FS	9/16-18 UNF	19	
		11/16-16 UNF	22	

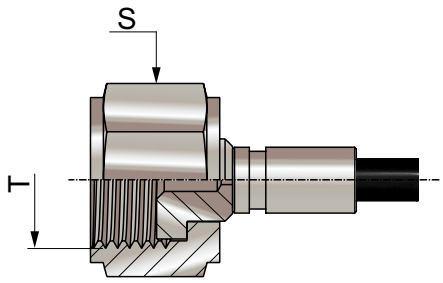

Technical Description	End of Fitting Type	Thread T	S	D
Swivel female UNF-ORFS SAE J 1453 / ISO 8434-3	FS 90°	9/16-18 UNF	19	
		11/16-16 UNF	22	

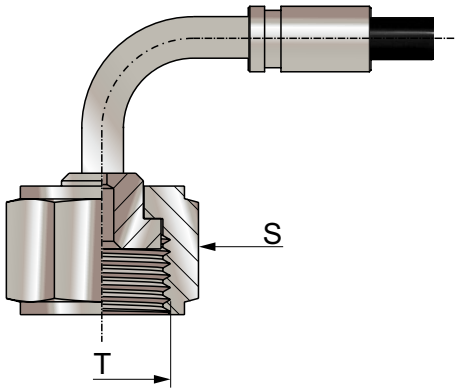

Technical Description	End of Fitting Type	Thread T	S	D
Swivel female UNF - JIC SAE J514	C	5/16-24 UNF	7/16	1/8
		7/16-20 UNF	9/16	1/4
		1/2-20 UNF	5/8	5/16
		9/16-18 UNF	3/4	3/8

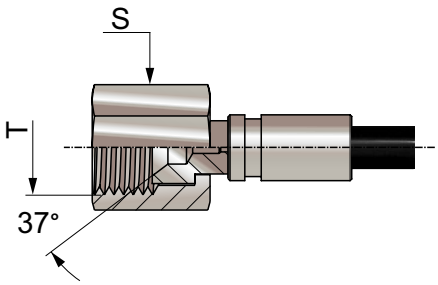

Technical Description	End of Fitting Type	Thread T	S	D
Swivel female UNF - JIC SAE J514	C 90°	5/16-24 UNF	7/16	1/8
		7/16-20 UNF	9/16	1/4
		1/2-20 UNF	5/8	5/16
		9/16-18 UNF	3/4	3/8

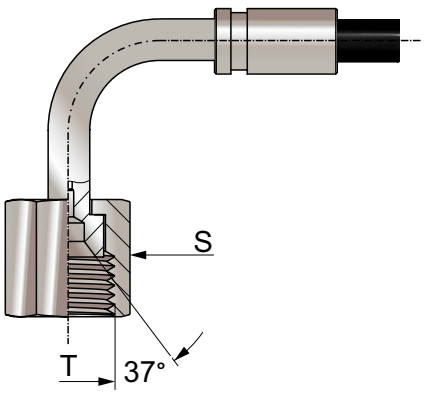

Technical Description	End of Fitting Type	Thread T	S	D
End of fitting with internal pin for pressure test point valve actuation	PE			

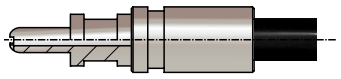

Technical Description	End of Fitting Type	Thread T	S	D
Metric swivel male	M	M8x1	3/8	

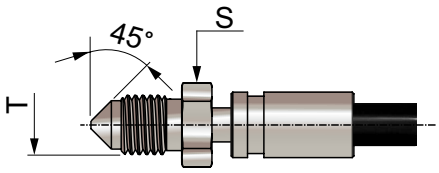

Technical Description	End of Fitting Type	Thread T	S	D
Fixed male NPT / BSPT ANSI / ASM E B 1.20.1 - NBR 12912	B	1/8 NPT	11	
		1/4 NPT	17	
		3/8 NPT	22	
		1/2 NPT	27	
		1/8 BSPT	14	
		1/4 BSPT	17	

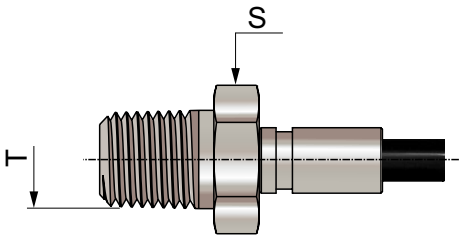

Technical Description	End of Fitting Type	Thread T	S	D
Fixed metric male 24° DIN 2353	H	M10x1	10	4
		M12x1,5	14	6
		M14x1,5	17	8
		M16x1,5	19	10

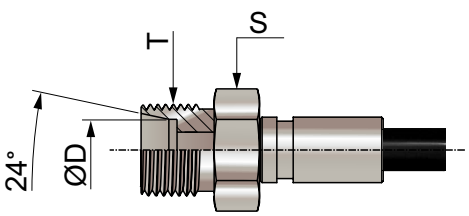

Technical Description	End of Fitting Type
Fixed metric male / BSP ISO 1179-2 / Rosca BSP	K

Thread T	S	D
M10x1	14	
M12x1,5	17	
M14x1,5	19	
M16x1,5	22	
G1/8 BSP	14	
G1/4 BSP	19	
G1/2 BSP	27	

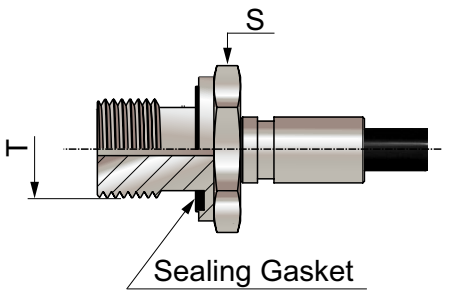

Technical Description	End of Fitting Type
Fixed male UNF SAE J 514 (JIC)	J

Thread T	S	D
5/16-24 UNF	1/2	1/8
7/16-20 UNF	9/16	1/4
1/2-20 UNF	9/16	5/16
9/16-18 UNF	11/16	3/8

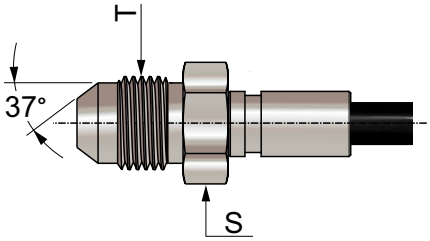

Technical Description	End of Fitting Type
Swivel female BSP 60° Cone (ISO / DIS 8434-6)	DIS

Thread T	S	D
G1/8 BSP	14	
G1/4 BSP	17	
G1/2 BSP	27	

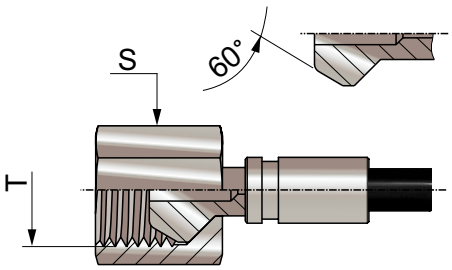

AE - Adapter for connecting two capillary test hoses
Allows the connection of M16x2 / M16x2, M16x1.5 / M16x1.5 or M16x2 / M16x1.5 hoses.



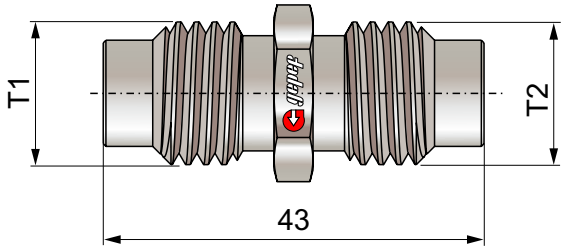

Code	T1	T2
AE-M16x2	M16x2	M16x2
AE-M16x1,5	M16x1,5	M16x1,5
AE-M16x2 - AE-M16x1,5	M16x2	M16x1,5

Coding example:

AE-M16x2 (Adapter for M16x2 Hose Splicing).

For AISI 316 stainless steel, add the letter I at the end of the code.

For Viton (FKM) or EPDM seals, add the letter V or E at the end of the code.

If you require a different adapter configuration not listed in this catalog, please contact our Technical Department.

Conversion adapter for “P” end of fitting type — ACMF

ACMF - Conversion Adapter for “P” Type End Fittings - Refer to “Capillary Hoses”.
Allows the conversion of an M16x2 pressure test point connection to M16x1.5 and vice versa.



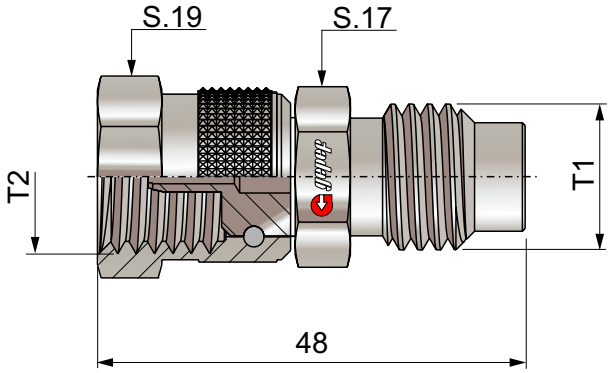

Code	T1	T2
ACMF 2/1,5	M16x2	M16x1,5
ACMF 1,5/2	M16x1,5	M16x2

Coding example:

ACMF 2/1,5 (Conversion Adapter for “P” Type End Fittings, M16x2 Male Thread, M16x1.5 Female Thread).

For AISI 316 stainless steel, add the letter I at the end of the code.

For Viton (FKM) or EPDM seals, add the letter V or E at the end of the code.

If you require a different adapter configuration not listed in this catalog, please contact our Technical Department.

INSTALLATION INSTRUCTIONS (SAE J1273 - ISO 8331)

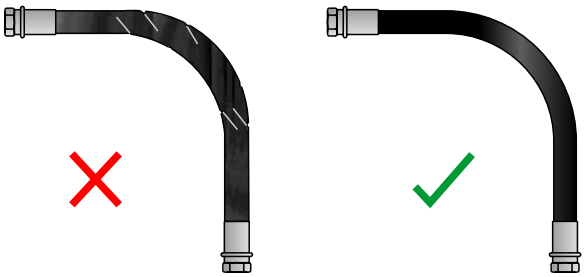

INCORRECT INSTALLATION CORRECT INSTALLATION

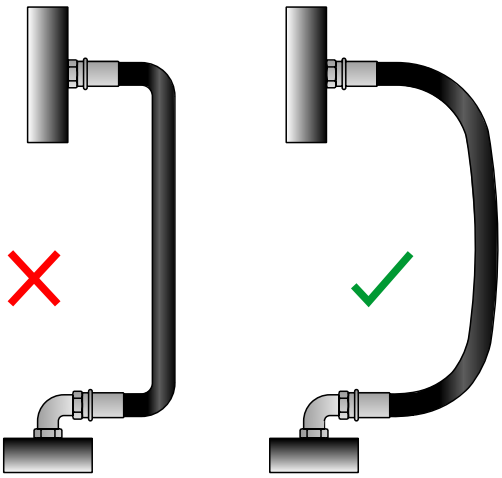

INCORRECT INSTALLATION CORRECT INSTALLATION

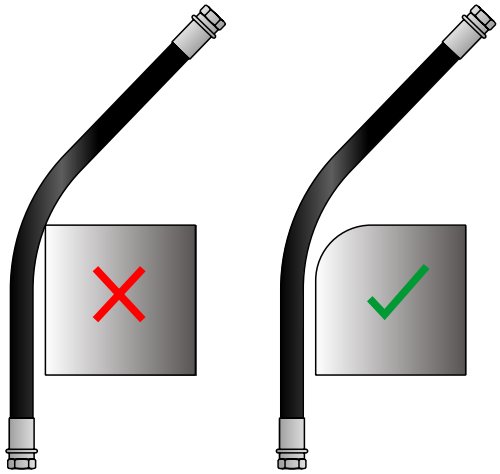

INCORRECT INSTALLATION CORRECT INSTALLATION

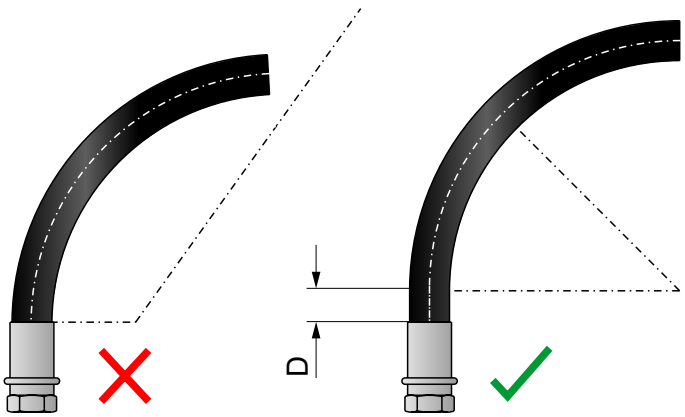

INCORRECT INSTALLATION CORRECT INSTALLATION



INCORRECT INSTALLATION



CORRECT INSTALLATION

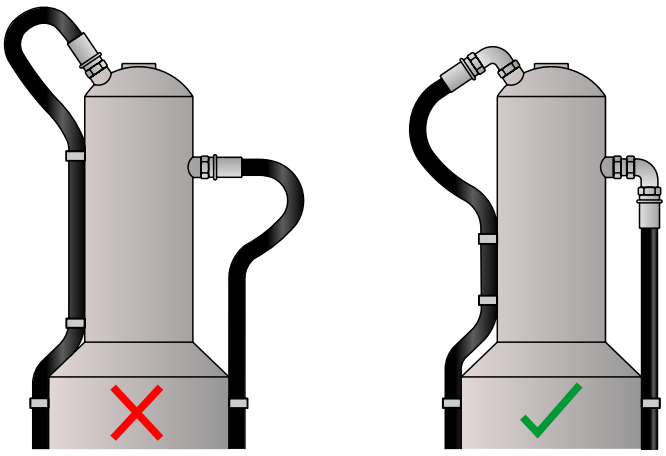

INCORRECT INSTALLATION CORRECT INSTALLATION

INSTALLATION INSTRUCTIONS (SAE J1273 - ISO 8331)

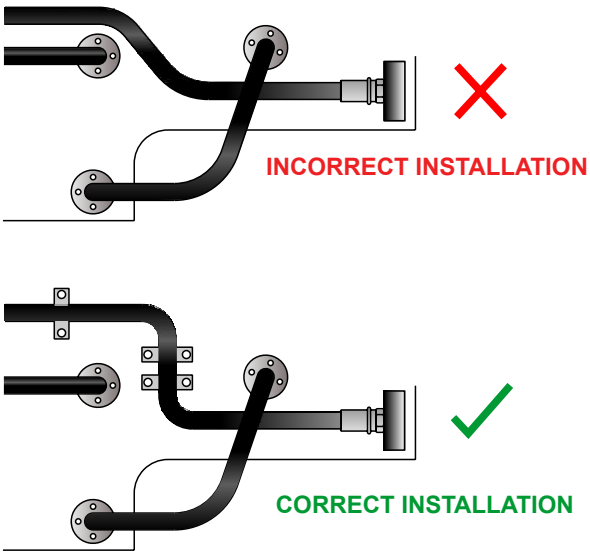

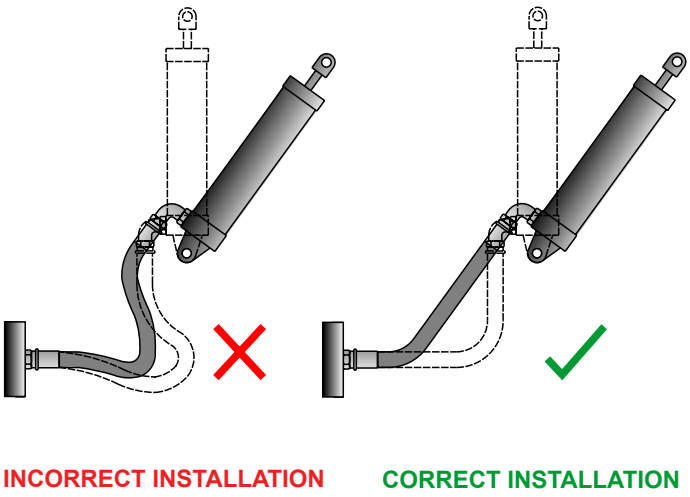

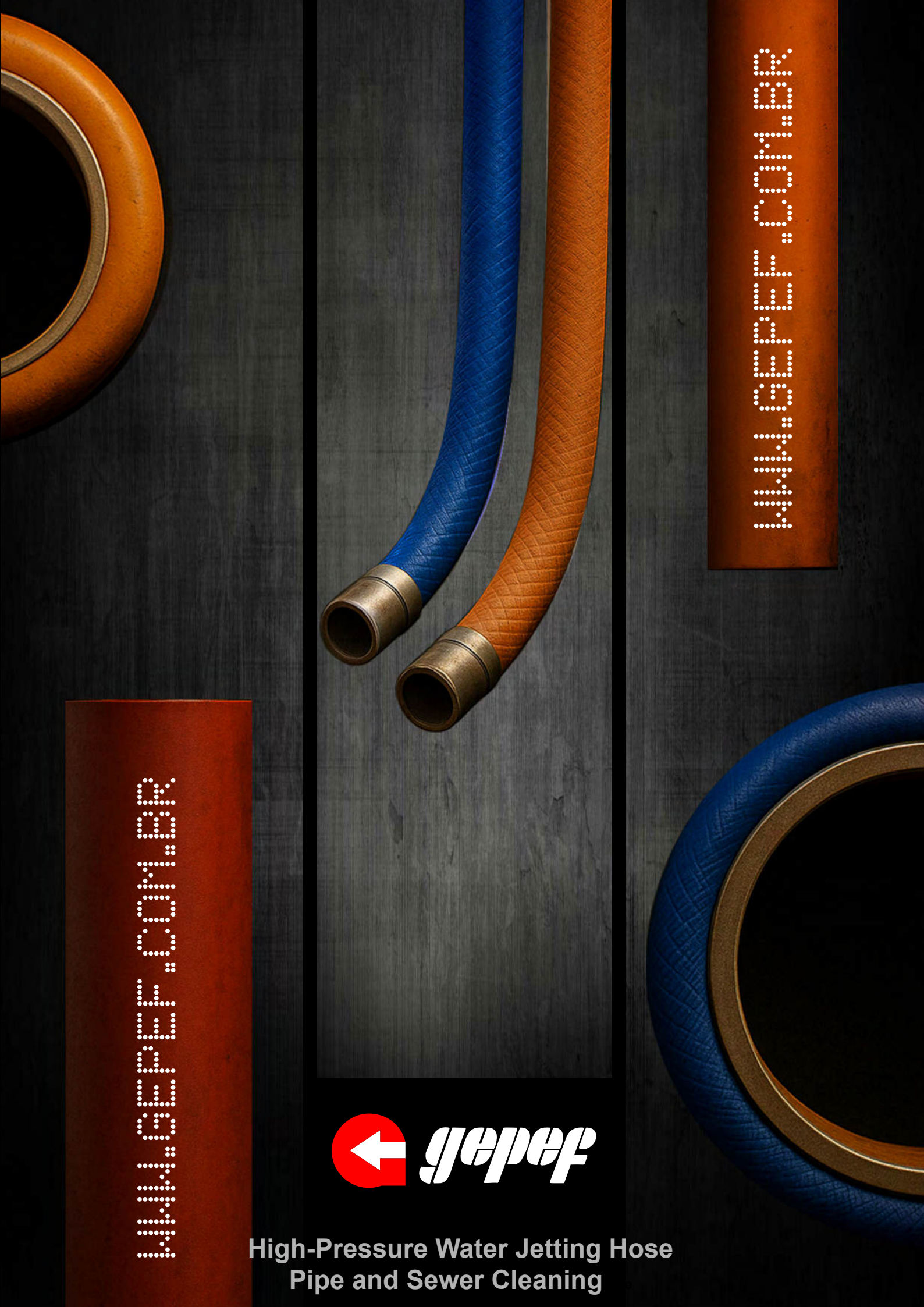

High-Pressure Water Jetting Hose
Pipe and Sewer Cleaning

HIGH-PRESSURE WATER JETTING HOSE / PIPE AND SEWER CLEANING

High-pressure water jetting hoses are designed to withstand extreme pressures and are used in industrial cleaning applications, pipe unclogging, and residue removal through high-pressure water jets. These hoses are essential for operations that require high efficiency, safety, and durability, delivering excellent performance in several sectors such as petrochemical, construction, sanitation, marine, and mining industries.

Technical Characteristics

High pressure resistance

High-pressure water jetting hoses feature high-strength steel braid reinforcement, ensuring safety and durability under severe operating conditions and supporting extremely high working pressures.

Abrasion-resistant and chemical-resistant cover

The outer cover, typically manufactured from polyurethane, offers excellent resistance to abrasion, chemicals, and friction-related wear, ensuring long service life even in harsh environments.

Resistance to moisture and extreme conditions

The cover material is waterproof and resistant to humid, saline environments and extreme temperature variations, allowing continuous use in outdoor operations and coastal areas where corrosion is a critical concern.

Flexibility and easy handling

Even under high pressure, the hose maintains flexibility, facilitating handling in confined spaces and optimizing operational efficiency.

Applications

Industrial surface cleaning

Used for removal of scale, paint, rust, and other residues from metal and concrete surfaces.

Pipe and sewer cleaning

Ideal for unclogging and cleaning sewer systems, industrial pipelines, and other piping networks.

Equipment maintenance

Applied in the cleaning and maintenance of heavy industrial equipment, removing dirt, oils, and contaminants that may impair performance.

Advantages

Safety and reliability

Hoses designed for high-pressure resistance, ensuring safe operation in demanding environments.

Extended service life

The abrasion-resistant cover and reinforced core ensure extended durability, reducing maintenance and replacement costs.

Application versatility

Suitable for multiple cleaning, cutting, and maintenance operations in industries that require robust and efficient solutions.

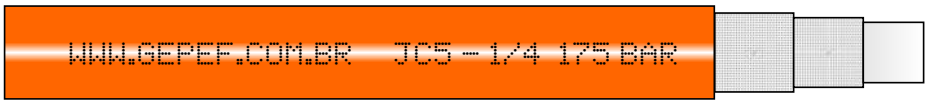

Coding example:

JC537009 x 1.000mm (JC537009 hose with a length of 1,000 mm)

If another type of hose or fitting not listed in this catalog is required, please contact our technical department.

Hydro Jetting Hose

JCL



Type	Size	Dash	DN	Inside Diameter I.D	Outside Diameter O.D	Working Pressure (bar / PSI)	Bend Radius	Weight g/m
JCL17000	1/8”	-2	3	3,5 mm	7,5 mm	345 / 5000	25 mm	41
JCL27000	3/16”	-3	5	4,8 mm	10,5 mm	345 / 5000	30 mm	69
JCL37000	1/4”	-4	6	6,4 mm	12,2 mm	345 / 5000	50 mm	87
JCL57000	3/8”	-6	10	9,7 mm	16,8 mm	345 / 5000	75 mm	156

Technical Characteristics

Inner tube manufactured from thermoplastic polymer, reinforced with high-elasticity fiber braiding, and covered with polyurethane with high abrasion resistance, UV stabilized, and resistant to hydrolysis, suitable for outdoor applications in environments with high humidity.

Applications

High-pressure cleaning and flushing of industrial systems and domestic sewer networks.

Temperature Range / Service

From -40°C to +70°C (From -40°F to +158°F).

Working Pressure

Safety factor 1:2.5

Dimensional Tolerance

-0% a +3%

Coil Length

Available upon request up to 350 meters

Hydro Jetting Hose

JC5

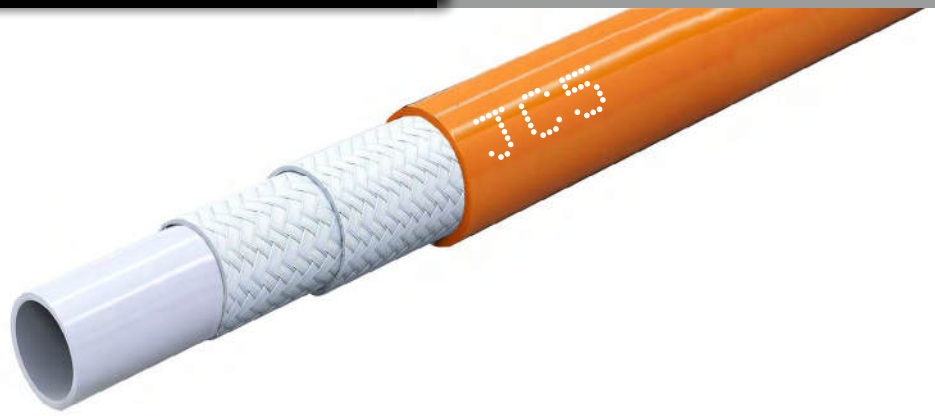

Type	Size	Dash	DN	Inside Diameter I.D	Outside Diameter O.D	Working Pressure (bar / PSI)	Bend Radius	Weight g/m
JC537009	1/4”	-4	6	6,4 mm	12,7 mm	175 / 2540	60 mm	83
JC557009	3/8”	-6	10	9,7 mm	16,0 mm	175 / 2540	90 mm	132
JC567009	1/2”	-8	12	13,0 mm	21,0 mm	175 / 2540	95 mm	210
JC587009	3/4”	-12	19	19,2 mm	29,5 mm	175 / 2540	120 mm	380
JC597009	1”	-16	25	25,6 mm	37,0 mm	175 / 2540	150 mm	555
JC597009	1”1/4	-20	32	32,0 mm	45,7mm	175 / 2540	235 mm	790

Technical Characteristics

Inner tube manufactured from thermoplastic compound, reinforced with double polyester fiber braid, and polyurethane cover with high abrasion resistance, hydrolysis resistant, and stabilized for outdoor applications in high-humidity and saline environments.

Applications

Outdoor applications in environments with high humidity and saline exposure.

Temperature Range / Service

From -40°C to +55°C (From -40eF to 131°F).

Working Pressure

Safety factor 1:2.5

Coil Length

Available upon request up to 350 meters

Hydro Jetting Hose

JC7



Type	Size	Dash	DN	Inside Diameter I.D	Outside Diameter O.D	Working Pressure (bar / PSI)	Bend Radius	Weight g/m
JC767101	1/2”	-8	12	13,0 mm	22,4 mm	275 / 4000	75 mm	277
JC777101	5/8”	-10	16	16,0 mm	26,5 mm	220 / 3200	100 mm	372
JC787101	3/4”	-12	19	19,2 mm	29,8 mm	207 / 3000	120 mm	431
JC797101	1”	-16	25	25,6 mm	37,7 mm	207 / 3000	150 mm	580
JC7107101	1”1/4	-20	32	32,0 mm	46,0 mm	207 / 3000	235 mm	848
JC7107101	1”1/2	-24	38	38,2 mm	54,0 mm	207 / 3000	375 mm	1186

Technical Characteristics

Thermoplastic polymer inner tube, reinforced with double polyester fiber braid, and micro-perforated polyurethane outer cover with high abrasion resistance, UV stabilized and hydrolysis resistant for outdoor applications in high-humidity and saline environments.

Applications

JC7 hose series developed for high-pressure water washing applications.

Temperature Range / Service

From -40°C to +55°C (From -40°F to 131°F).

Working Pressure

Safety factor 1:2.5

Coil Length

Available upon request up to 350 meters

Hydro Jetting Hose

JC8



Type	Size	Dash	DN	Inside Diameter I.D	Outside Diameter O.D	Working Pressure (bar / PSI)	Bend Radius	Weight g/m
JC867105	1/2”	-8	12	13,0 mm	22,4 mm	345 / 5000	100 mm	292
JC887105	3/4”	-12	19	19,2 mm	29,8 mm	250 / 3625	120 mm	460
JC897105	1”	-16	25	25,6 mm	37,3 mm	250 / 3625	150 mm	643
JC8107105	1”1/4	-20	32	32,0 mm	46,0 mm	250 / 3625	235 mm	985

Technical Characteristics

Thermoplastic polymer inner tube, reinforced with double braid of high-tenacity textile fibers, and micro-perforated polyurethane outer cover with high abrasion resistance, UV stabilized and hydrolysis resistant, suitable for outdoor use in high-humidity and saline environments.

Applications

JC8 hose series developed for high-pressure water washing applications.

Temperature Range / Service

From -40°C to +55°C (From -40°F to 131°F).

Working Pressure

Safety factor 1:2.5

Coil Length

Available upon request up to 350 meters

Hydro Jetting Hose

JCX

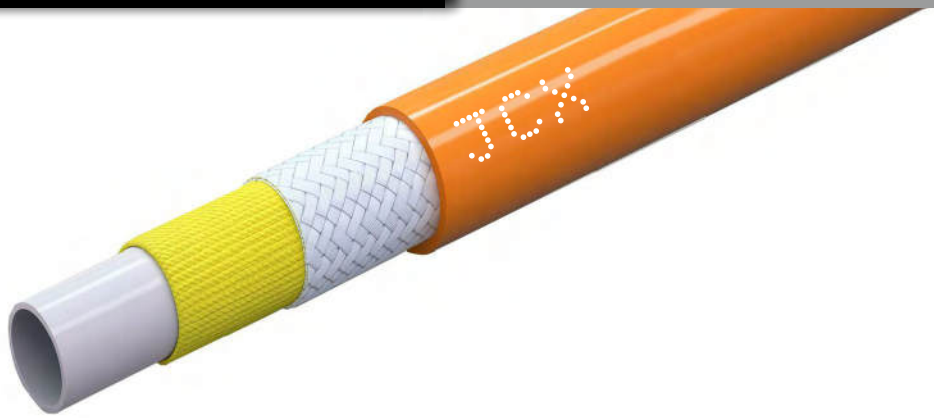

Type	Size	Dash	DN	Inside Diameter I.D	Outside Diameter O.D	Working Pressure (bar / PSI)	Bend Radius	Weight g/m
JCX67001	1/2”	-8	13	13,0 mm	21,3 mm	207 / 3000	140 mm	-
JCX67001	5/8”	-10	16	16,0 mm	25,4 mm	207 / 3000	140 mm	-
JCX87001	3/4”	-12	19	19,2 mm	29,0 mm	207 / 3000	170 mm	-
JCX97001	1”	-16	25	25,6 mm	37,6 mm	207 / 3000	190 mm	663

Technical Characteristics

Thermoplastic compound inner tube, reinforced with high-tenacity textile fiber braid, and polyurethane outer cover with high abrasion resistance, UV stabilized and hydrolysis resistant for outdoor applications in high-humidity and saline environments.

Applications

Outdoor applications in environments with high humidity and saline exposure.

Temperature Range / Service

From -40°C to +55°C (From -40°F to 131°F).

Working Pressure

Safety factor 1:2.5

Coil Length

Available upon request up to 350 meters

Hydro Jetting Hose

MT1E



Type	Size	Dash	DN	Inside Diameter I.D	Outside Diameter O.D	Working Pressure (bar / PSI)	Bend Radius	Weight g/m
MT127000E	3/16”	5	5	4,8 mm	10,0 mm	560 / 8122	30 mm	126
MT137000E	1/4”	6	6	6,4 mm	11,9 mm	480 / 6962	40 mm	166
MT147000E	5/16”	8	8	8,0 mm	14,0 mm	384 / 5569	50 mm	205
MT157000E	3/8”	10	10	9,7 mm	16,0 mm	360 / 5221	60 mm	246
MT167000E	1/2”	12	12	13,0 mm	19,2mm	304 / 4409	75 mm	314

Technical Characteristics

Polyethylene inner tube, reinforced with high-strength steel braid, and polyurethane outer cover with high abrasion resistance, resistant to hydrolysis and microorganisms, suitable for outdoor applications in high-humidity and saline environments.

Applications

Ideal for high-pressure washers.

Temperature Range / Service

From -20°C to +60°C (From -4°F to +140°F).

Working Pressure

Safety factor 1:2.5

Coil Length

Available upon request up to 350 meters

Hydro Jetting Hose

JET POWER



Type	Size	Dash	DN	Inside Diameter I.D	Outside Diameter O.D	Working Pressure (bar / PSI)	Bend Radius	Weight g/m
JP17003	1/8”	-2	3,5	3,5 mm	11,2 mm	1120 / 16240	25 mm	180
JP27003	3/16”	-3	4,8	4,8 mm	11,3 mm	800 / 11600	30 mm	167
JP37003	1/4”	-4	6,4	6,4 mm	14,5 mm	1120 / 16240	40 mm	253
JP37003HP	1/4”	-4	6,4	6,4 mm	14,5 mm	1280 / 18560	40 mm	260
JP47003	5/16”	-5	8,0	8,0 mm	16,0 mm	1000 / 14500	50 mm	292
JP57003	3/8”	-6	9,5	9,5 mm	18,8 mm	1120 / 16240	90 mm	389
JP67003#	1/2”	-8	13,0	13,0 mm	25,2 mm	1000 / 14500	150 mm	516

Technical Characteristics

Thermoplastic polymer inner tube, reinforced with aramid fiber braid and high-strength steel braid, and polyurethane outer cover with high abrasion resistance for outdoor applications in high-humidity and saline environments.

Applications

JET POWER hose series developed for high-pressure water washing and water jet cutting applications.

Temperature Range / Service

From -40°C to +55°C (From -40°F to +131°F).

Working Pressure

Safety factor 1:2.5 / # Safety factor 1:2.40

Coil Length

Available upon request up to 350 meters



gepef

Offshore Hoses

OFFSHORE HOSE LINE

The O&G series was developed to meet the application requirements of Oil & Gas, Offshore and Marine sectors, where light weight, fluid compatibility, compactness and durability are essential, especially when combined with very harsh or extreme environmental conditions.

Standard:

Designed and manufactured in accordance with the requirements of API 17E / ISO 13628-5 (Umbilicals), DNV-GL and MSHA standards.

Applications:

The O&G series can be applied in subsea hydraulic circuits, injection and general control systems (methanol injection), BOP control, ROV connection, handling of compatible gases, and subsea operations on platforms/vessels (Air, O2, Nitrox).

Pressure:

Offers a complete range of long-length solutions, from 3/16” (Pilot Lines) up to 1” inside diameter, with working pressures of 5,000, 10,000 and 15,000 PSI.

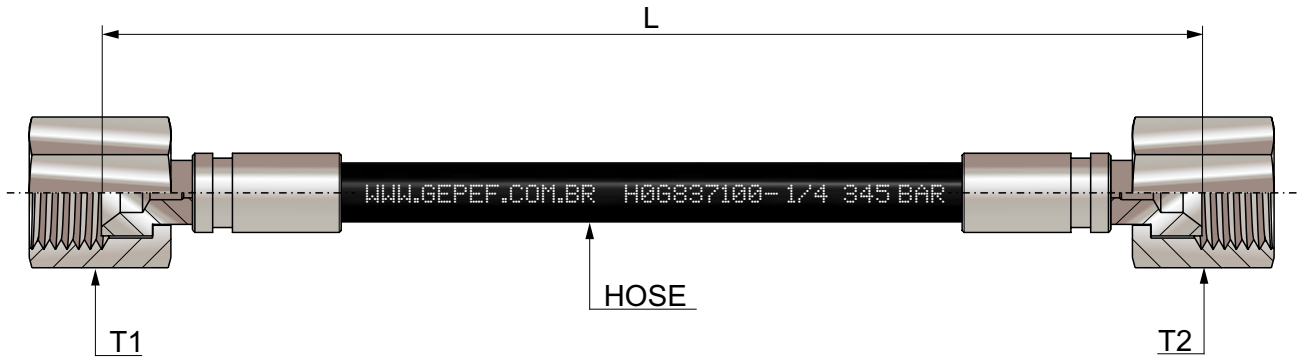

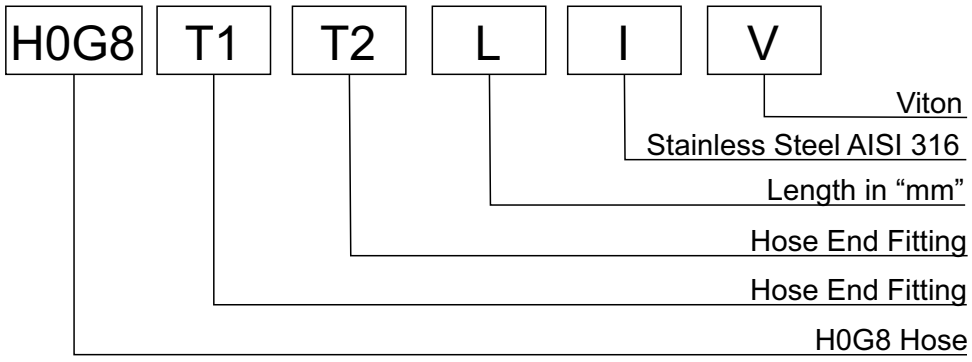

Coding example:
H0G8M37100 (#) 1/4 C 7/16-20 UNF x 1.000mm (Hose HOG8M37100 (#) 1/4 with C 7/16-20 UNF end fittings, 1000mm length).
For AISI 316 stainless steel, add the letter I at the end of the code.
For Viton (FKM) or EPDM seals, add the letter V or E at the end of the code.
If another type of hose or fitting not listed in this catalog is required, please contact our technical department.

H0G8



Type	Size	Dash	DN	Inside Diameter I.D	Outside Diameter O.D	Working Pressure (bar / PSI)	Bend Radius	Weight g/m
H0G827100 (Δ)	3/16”	-3	5	4,8 mm	10,0 mm	345 / 5000	35 mm	72
H0G837100 (Δ)	1/4”	-4	6	6,4 mm	11,8 mm	345 / 5000	50 mm	84
H0G8M37100 (#)	1/4”	-4	6	6,4 mm	14,8 mm	689 / 10000	50 mm	152
H0G8M37100K3 (**)	1/4”	-4	6	6,4 mm	14,8 mm	1.034 / 15000	50 mm	152
H0G857100 (Δ)	3/8”	-6	10	9,7 mm	16,0 mm	345 / 5000	80 mm	139
H0G8M57100 (#)	3/8”	-6	10	9,7 mm	18,0 mm	689 / 10000	90 mm	197
H0G867100 (Δ)	1/2”	-8	12	13,0 mm	22,0 mm	345 / 5000	100 mm	274
H0G8M67100K3 (**)	1/2”	-8	12	13,0 mm	24,0 mm	689 / 10000	110 mm	348
H0G887100 (#)	3/4”	-12	19	19,1 mm	28,8 mm	345 / 5000	210 mm	420
H0G897100 (#)	1”	-16	25	25,4 mm	37,2 mm	345 / 5000	230 mm	587

Technical Characteristics

Inner tube in thermoplastic polymer, braided reinforcement in high-elasticity fibers and outer polyurethane cover with high abrasion resistance, UV stabilized.

Applications

HOG8 series hoses were developed for conveying high-pressure polyols, solvents, paints, air, methanol and all compatible gases.

Operating Temperature Range

From -40°C to +55°C (From -104°F to +131°F).

Working Pressure

Safety factor 1:4 / (**) Safety factor 1:3

Size Variation

-0% a +3%

Hose Specifications

- Designed and manufactured in accordance with API 17E / ISO 13628-5 requirements
- (Δ) in compliance with or exceeding SAE J1517 sec. 100R8 – ISO3949 – DNV-GL – MSHA
- (#) with pressures exceeding SAE J517 100R8 standard

DIS / B / F / K

Technical Description	End of Fitting Type
Swivel female BSP 60° Cone (ISO / DIS 8434-6)	DIS

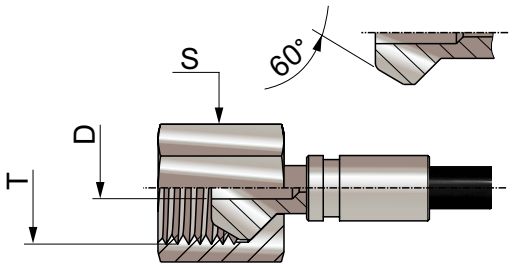

Thread T	Size	S	D	Multispiral
G1/4 BSP	3/16”	19	3	
G1/4 BSP	1/4”	19	4	
G1/4 BSP	1/4”	19	4	•
G3/8 BSP	3/8”	22	7	
G3/8 BSP	3/8”	22	7	•
G1/2 BSP	1/2”	27	9,5	•
G3/4 BSP	3/4”	32	15	•
G1 BSP	1”	38	20	•

AISI 316 Stainless Steel Material

Technical Description	End of Fitting Type
Fixed male NPT / BSPT ANSI / ASM E B 1.20.1 - NBR 12912	B

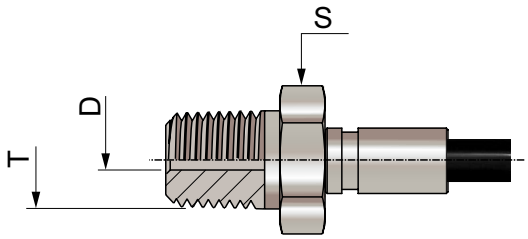

Thread T	Size	S	D	Multispiral
1/8 NPT	3/16”	12	3	
1/4 NPT	1/4”	15	4	
3/8 NPT	1/4”	19	4	•
1/2 NPT	3/8”	22	7	
3/8 NPT	3/8”	19	7	•
1/2 NPT	1/2”	22	9,5	•
3/4 NPT	3/4”	30	15	•
1 NPT	1”	36	20	•

AISI 316 Stainless Steel Material

Technical Description	End of Fitting Type
Swivel female / DKO 24° DIN 2353	F

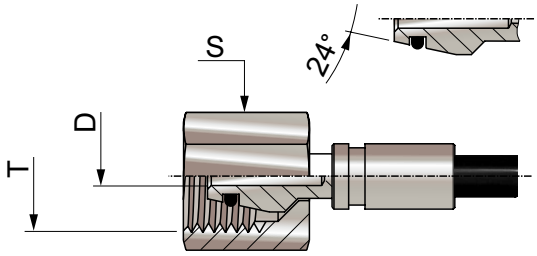

Thread T	Size	S	D	Multispiral
M16x1,5	3/16”	19	3	
M16x1,5	1/4”	19	4	
M16x1,5	1/4”	19	4	•
M20x1,5	3/8”	24	7	
M24x1,5	3/8”	30	7	•
M24x1,5	1/2”	30	9,5	•
M36x2	3/4”	41	15	•
M42x2	1”	50	20	•

AISI 316 Stainless Steel Material

Technical Description	End of Fitting Type
Fixed metric male / BSP ISO 1179-2 / Rosca BSP	K

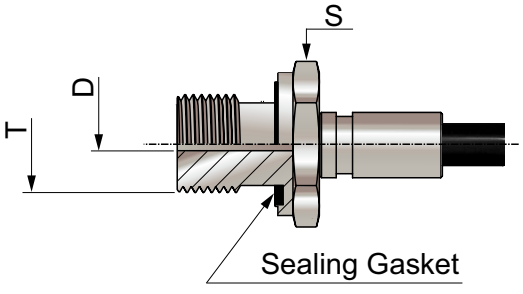

Thread T	Size	S	D	Multispiral
1/4 BSP	3/16”	19	3	
1/4 BSP	1/4”	19	4	
1/4 BSP	1/4”	19	4	•
3/8 BSP	3/8”	22	7	
3/8 BSP	3/8”	22	7	•
1/2 BSP	1/2”	27	9,5	•
3/4 BSP	3/4”	32	15	•
1 BSP	1”	38	20	•

AISI 316 Stainless Steel Material

Technical Description	End of Fitting Type
Swivel female UNF - JIC SAE J514	C

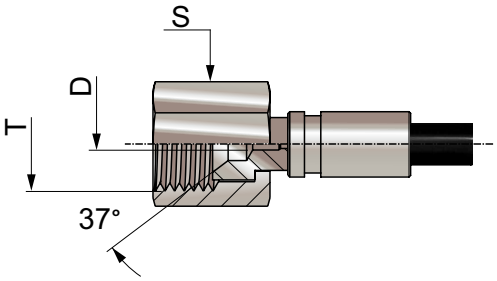

Thread T	Size	S	D	Multispiral
7/16-20 UNF	3/16”	15	3	
7/16-20 UNF	1/4”	15	4	
7/16-20 UNF	1/4”	14	4	•
3/4-16 UNF	3/8”	24	7	
9/16-18 UNF	3/8”	19	7	•
3/4-16 UNF	1/2”	24	9,5	•
1 1/16-12 UNF	3/4”	32	15	•
1 5/16-12 UNF	1”	41	20	•

AISI 316 Stainless Steel Material

INSTALLATION INSTRUCTIONS (SAE J1273 - ISO 8331)

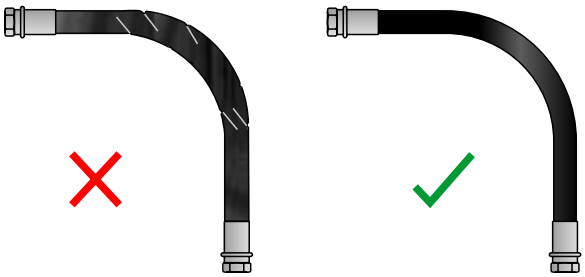

INCORRECT INSTALLATION CORRECT INSTALLATION

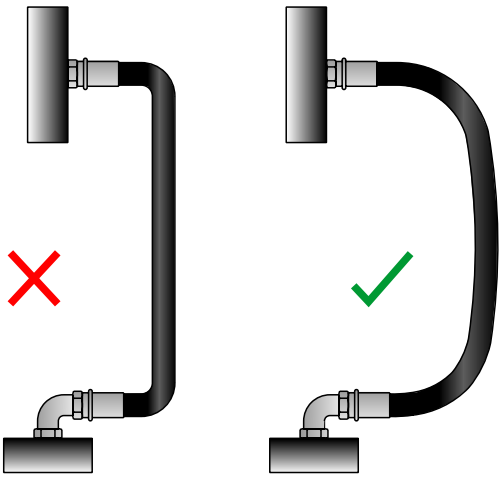

INCORRECT INSTALLATION CORRECT INSTALLATION

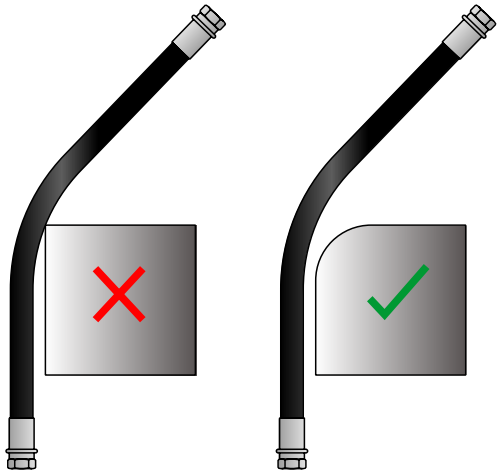

INCORRECT INSTALLATION CORRECT INSTALLATION

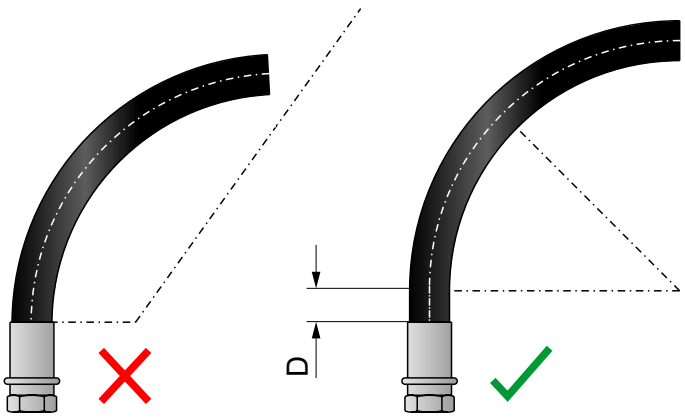

INCORRECT INSTALLATION CORRECT INSTALLATION



INCORRECT INSTALLATION



CORRECT INSTALLATION

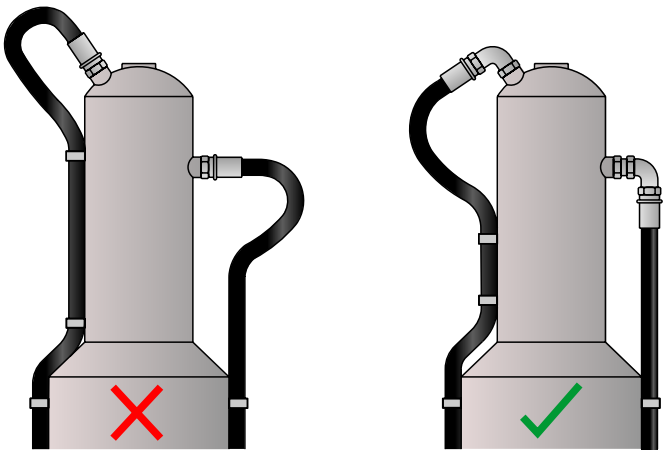

INCORRECT INSTALLATION CORRECT INSTALLATION

INSTALLATION INSTRUCTIONS (SAE J1273 - ISO 8331)

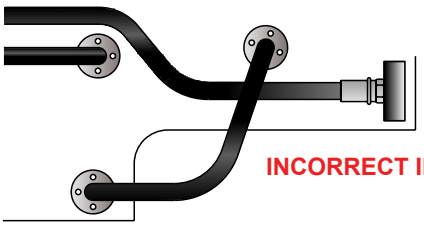

INCORRECT INSTALLATION

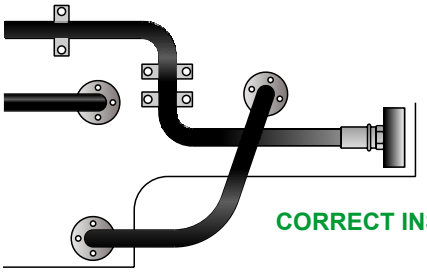

CORRECT INSTALLATION

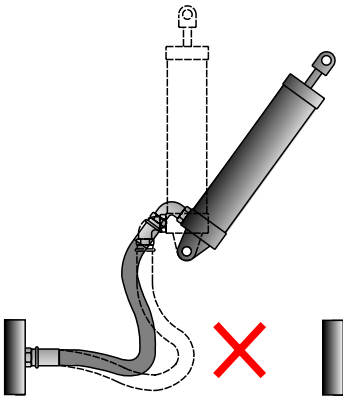

INCORRECT INSTALLATION

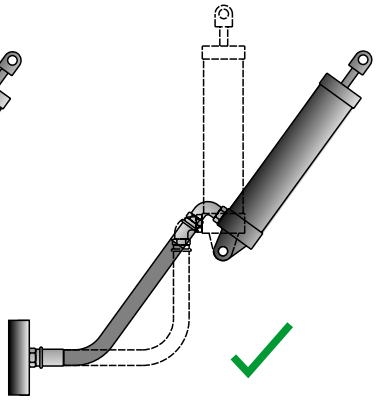

CORRECT INSTALLATION



gepef

Thermoplastic Hoses

THERMOPLASTIC HOSES FOR HIGH AND ULTRA-HIGH PRESSURE

Thermoplastic hoses specially developed for fluid transmission under high and ultra-high pressure conditions.
They are easy to handle and install and are used where maximum safety is required.
Thermoplastic hoses provide excellent mechanical and chemical resistance, with durability far superior to rubber hoses.
All fittings marketed by GEPEF are manufactured in-house.
If the required fitting is not listed in this catalog, please contact our technical department.

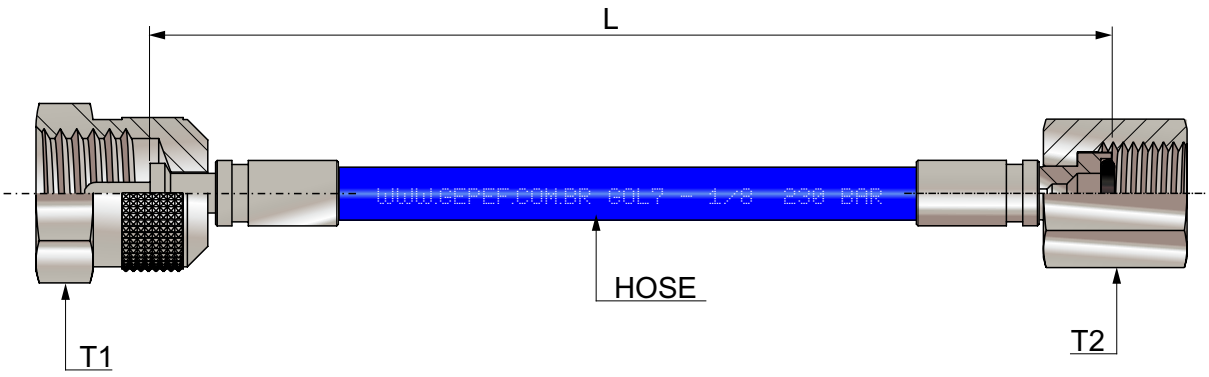

MC	T1	T2	L	I	V

V — Viton
I — Stainless Steel AISI 316
L — Length in “mm”
T2 — Hose End Fitting
T1 — Hose End Fitting
MC — GOL7 / GOL8 / MTKH / UHP , Hoses

Coding example:

GOL7 1/4 P M16x2 - E G1/4 BSP x 1.000mm (Thermoplastic hose GOL7 1/4 with fittings P M16x2 and E G1/4 BSP, length 1000 mm).

For AISI 316 stainless steel, add the letter I at the end of the code.

For Viton (FKM) or EPDM seals, add the letter V or E at the end of the code.

If another type of hose or fitting not listed in this catalog is required, please contact our technical department.

GOL7



Type	Dash Size	DN	Inside Diameter I.D	Outside Diameter O.D	Working Pressure (bar / PSI)	Burst Pressure (bar / PSI)	Bend Radius	Weight g/m
GOL7 - 1/8	-2	3	3,5 mm	8,5 mm	230 / 3340	920 / 13340	12 mm	57
GOL7 - 3/16	-3	5	4,8 mm	10,0 mm	210 / 3045	840 / 12180	30 mm	73
GOL7 - 1/4	-4	6	6,4 mm	11,8 mm	200 / 2900	800 / 11600	35 mm	90
GOL7 - 3/8	-6	10	9,7 mm	16,0 mm	175 / 2535	700 / 10150	55 mm	155
GOL7 - 1/2	-8	12	13,0 mm	20,3 mm	140 / 2030	560 / 8120	75 mm	219
GOL7 - 5/8	-10	16	16,0 mm	23,5 mm	105 / 1520	420 / 6090	120 mm	277
GOL7 - 3/4	-12	19	19,2 mm	26,5 mm	90 / 1305	360 / 5220	145 mm	330
GOL7 - 1	-16	25	25,6 mm	33,6 mm	70 / 1015	280 / 4060	200 mm	403

Construction

Inner tube in thermoplastic polyester, polyester fiber reinforcement, and UV-resistant polyurethane outer cover.

UV-resistant polyurethane outer cover. Pin-pricked for use with air and compatible gases.

Applications

The GOL 7 series hoses were designed for medium-pressure hydraulic applications.

Temperature Range

-54°C to +100°C / (-65°F to +212°F) - Maximum for air and water-based fluids: +70°C (158°F)

Working Pressure

Safety Factor: 1:4

Vacuum

0.93 bar ; 700 mm Hg

Standards

SAE J517-100 R7 and ISO 3949

GOL8



Type	Dash Size	DN	Inside Diameter I.D	Outside Diameter O.D	Working Pressure (bar / PSI)	Burst Pressure (bar / PSI)	Bend Radius	Weight g/m
GOL8 - 1/8	-2	3	3,5 mm	7,1 mm	420 / 6090	1680 / 24360	30 mm	37
GOL8 - 1/8	**-2**	**3**	**3,5 mm**	**8,5 mm**	**700 / 10152**	**2100 / 30456**	**30 mm**	**55**
GOL8 - 3/16	-3	5	4,8 mm	10,0 mm	350 / 5075	1400 / 20300	35 mm	72
GOL8 - 1/4	-4	6	6,4 mm	11,8 mm	350 / 5075	1400 / 20300	50 mm	85
GOL8 - 3/8	-6	10	9,7 mm	16,0 mm	280 / 4060	1120 / 16240	80 mm	146
GOL8 - 1/2	-8	12	13,0 mm	20,3 mm	245 / 3550	980 / 14210	70 mm	225
GOL8 - 5/8	-10	16	16,0 mm	23,5 mm	195 / 2830	780 / 11300	125 mm	265
GOL8 - 3/4	-12	19	19,2 mm	26,5 mm	165 / 2390	660 / 9570	150 mm	352
GOL8 - 1	-16	25	25,6 mm	34,7 mm	145 / 2100	580 / 8410	200 mm	505

Construction

Inner tube in thermoplastic polyester, reinforcement with high-tenacity textile fibers, and UV-resistant polyurethane outer cover.

UV-resistant polyurethane outer cover. Pin-pricked for use with air and compatible gases.

Applications

The GOL 8 series hoses were designed for medium-pressure hydraulic applications.

Temperature Range

-40°C to +100°C / (-40°F to +212°F) - Maximum for air and water-based fluids: +70°C (158°F)

Working Pressure

Safety Factor: 1:4

Vacuum

0.93 bar ; 700 mm Hg

Standards

SAE J517-100 R8 and ISO 3949.

Thermoplastic Hose

MTKH



Type	Dash Size	DN	Inside Diameter I.D	Outside Diameter O.D	Working Pressure (bar / PSI)	Burst Pressure (bar / PSI)	Bend Radius	Weight g/m
MTKH - 1/4	-4	6	6,4 mm	14,5 mm	700 / 10150	280 / 40600	40 mm	260
MTKH - 3/8	-6	10	9,5 mm	18,0 mm	425 / 6162	1700 / 24650	60 mm	344
MTKH - 1/2	-8	12	13,0 mm	22,0 mm	375 / 5430	1500 / 21750	75 mm	460
MTKH - 3/4	-12	19	19,2 mm	28,2 mm	225 / 3260	900 / 13050	150 mm	659

Construction

Inner tube in thermoplastic polyester, reinforced with high-strength braided aramid fiber.

UV-resistant polyurethane outer cover. Pin-pricked for use with air and compatible gases.

Applications

The MTKH series hoses were developed for high-pressure hydraulic and pneumatic applications.

Temperature Range

-40°C to +100°C (-40°F to +212°F) — Maximum working temperature with air, water, and water-based fluids: +70°C (158°F).

Working Pressure

Safety Factor: 1:4

Vacuum

0.93 bar ; 700 mm Hg

Standards

NFPA 1936 E M SHA

UHP



Type	Dash Size	DN	Inside Diameter I.D	Outside Diameter O.D	Working Pressure (bar / PSI)	Burst Pressure (bar / PSI)	Bend Radius	Weight g/m
UHP - 1/8	-2	3	3,5 mm	11,2 mm	1120 / 16240	2800 / 40600	25 mm	180
UHP - 3/16	-3	5	4,8 mm	11,3 mm	800 / 11600	2000 / 29000	30 mm	167
UHP - 1/4	-4	6	6,4 mm	14,5 mm	1120 / 16240	2800 / 40600	40 mm	253
UHP - 5/16	-5	8	8 mm	16 mm	1000 / 14500	2500 / 36250	50 mm	292
UHP - 3/8	-6	10	9,5 mm	18,8 mm	1120 / 16240	2800 / 40600	90 mm	389
UHP - 1/2	-8	12	13 mm	25,2 mm	1000 / 14500	2500 / 36250	150 mm	516

Construction

Inner tube in thermoplastic polyester, reinforced with aramid fiber and high-strength steel braid.

Outer cover in abrasion-resistant and UV-resistant polyurethane.

Applications

The UHP hose series was developed for high-pressure water cleaning and waterjet cutting applications.

Temperature Range

-40°C to +55°C (-40°F to +131°F) — Maximum working temperature with air, water, and water-containing fluids: +70°C (158°F).

Working Pressure

Safety Factor 1:2.5

Technical Description	End of Fitting Type	Thread T	S	D
With pin to open and close the pressure test point valve	P	M16x2	19	
		M16x1,5	19	
		S12,65x1,5	5/8”	

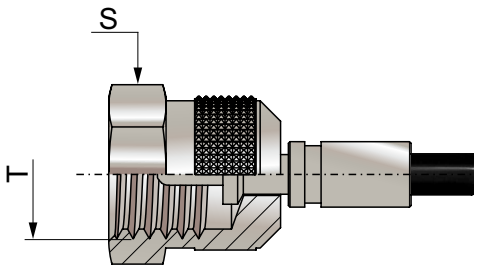

Technical Description	End of Fitting Type	Thread T	S	D
With pin to open and close the pressure test point valve	P 90°	M16x2	19	
		M16x1,5	19	
		S12,65x1,5	5/8”	

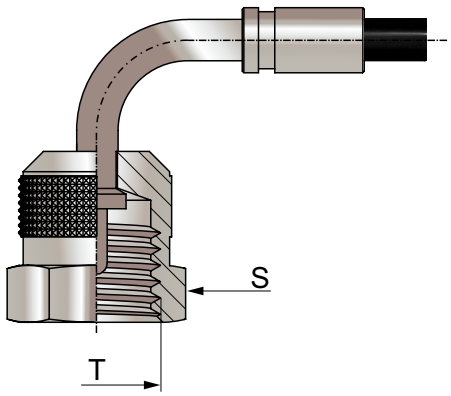

Technical Description	End of Fitting Type	Thread T	S	D
Straight Stub End DIN 2353	D			4
				6
				8
				10
				12
				1/4

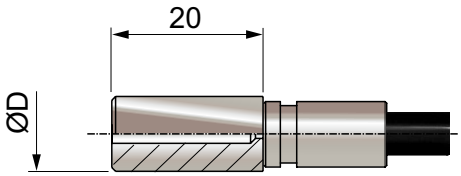

Technical Description	End of Fitting Type	Thread T	S	D
Straight Stub End DIN 2353	D 90°			4
				6
				8
				10
				12
				1/4

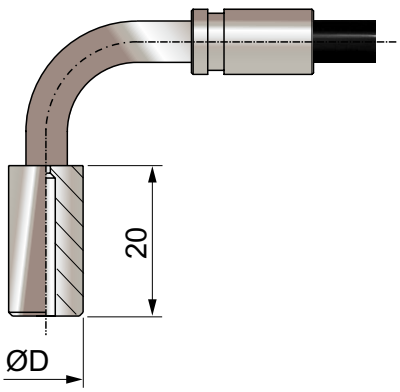

E / E90° / F / F90°

Technical Description	End of Fitting Type	Thread T	S	D
Swivel female for pressure gauges (EN 837-1)	E	G1/4 BSP	17	
		G1/2 BSP	27	
		M20x1,5	24	
		M14x1,5	17	

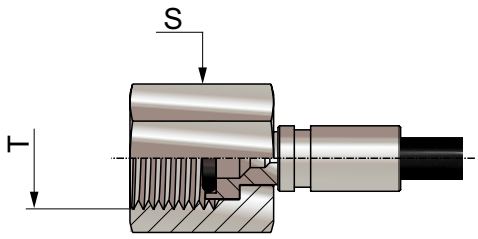

Technical Description	End of Fitting Type	Thread T	S	D
Swivel female for pressure gauges (EN 837-1)	E 90°	G1/4 BSP	17	
		G1/2 BSP	27	
		M20x1,5	24	
		M14x1,5	17	

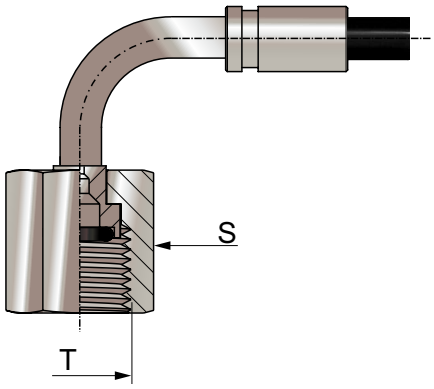

Technical Description	End of Fitting Type	Thread T	S	D
Swivel female / DKO 24° DIN 2353	F	M8x1	10	4LL
		M10x1	14	5L
		M12x1,5	14	6L
		M14x1,5	17	8L
		M16x1,5	19	10L
		M18x1,5	22	12L
		M14x1,5	17	6S
		M16x1,5	19	8S
		M18x1,5	22	10S
		M20x1,5	24	12S

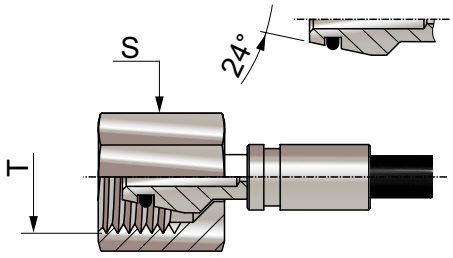

Technical Description	End of Fitting Type	Thread T	S	D
Swivel female / DKO 24° DIN 2353	F 90°	M8x1	10	4LL
		M10x1	14	5L
		M12x1,5	14	6L
		M14x1,5	17	8L
		M16x1,5	19	10L
		M18x1,5	22	12L
		M14x1,5	17	6S
		M16x1,5	19	8S
		M18x1,5	22	10S
		M20x1,5	24	12S

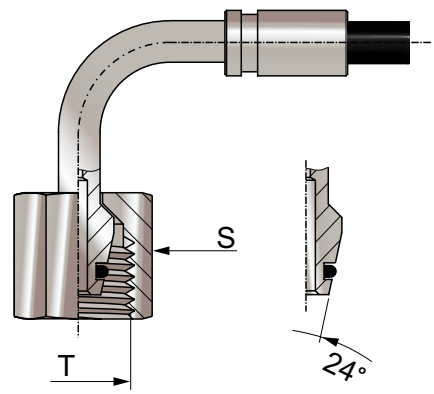

Technical Description	End of Fitting Type
Swivel female beaded DKO 24° DIN 2353	G

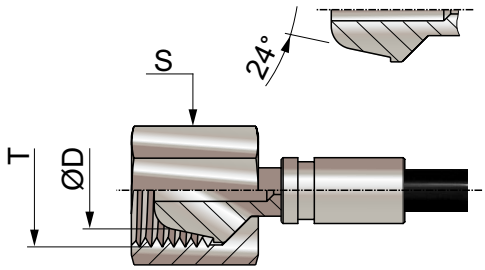

Thread T	S	D
M8x1	10	4LL
M10x1	14	5L
M12x1,5	14	6L
M14x1,5	17	8L
M16x1,5	19	10L
M18x1,5	22	12L
M14x1,5	17	6S
M16x1,5	19	8S
M18x1,5	22	10S
M20x1,5	24	12S

Technical Description	End of Fitting Type
Swivel female beaded DKO 24° DIN 2353	G 90°

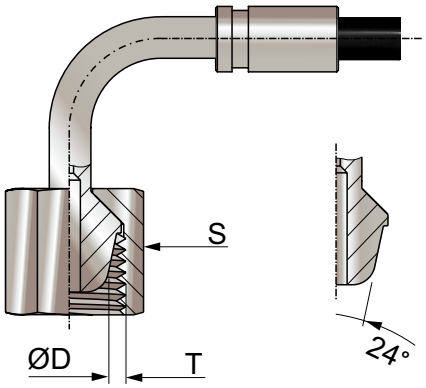

Thread T	S	D
M8x1	10	4LL
M10x1	14	5L
M12x1,5	14	6L
M14x1,5	17	8L
M16x1,5	19	10L
M18x1,5	22	12L
M14x1,5	17	6S
M16x1,5	19	8S
M18x1,5	22	10S
M20x1,5	24	12S

Technical Description	End of Fitting Type
Fixed female NPT / BSPT ANSI / ASM E B 1.20.1 - NBR 12912	I

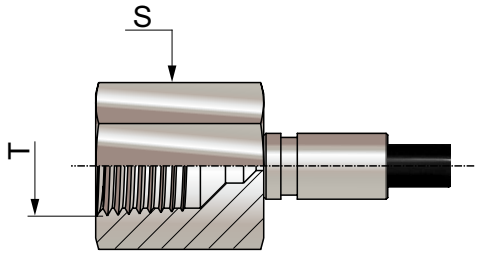

Thread T	S	D
1/8 NPT	17	
1/4 NPT	19	
3/8 NPT	22	
1/2 NPT	27	
1/8 BSPT	17	
1/4 BSPT	19	

Technical Description	End of Fitting Type
Fixed female NPT / BSPT ANSI / ASM E B 1.20.1 - NBR 12912	I 90°

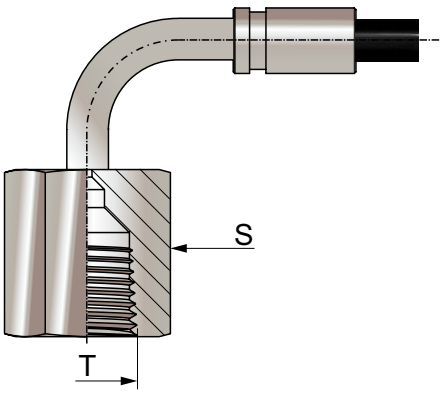

Thread T	S	D
1/8 NPT	17	
1/4 NPT	19	

Technical Description	End of Fitting Type	Thread T	S	D
Swivel female UNF-ORFS SAE J 1453 / ISO 8434-3	FS	9/16-18 UNF	19	
		11/16-16 UNF	22	

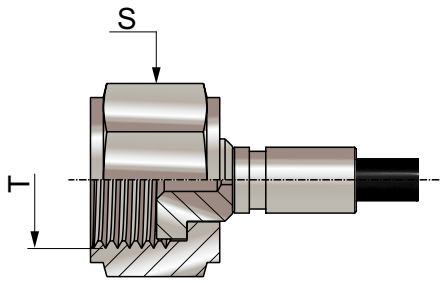

Technical Description	End of Fitting Type	Thread T	S	D
Swivel female UNF-ORFS SAE J 1453 / ISO 8434-3	FS 90°	9/16-18 UNF	19	
		11/16-16 UNF	22	

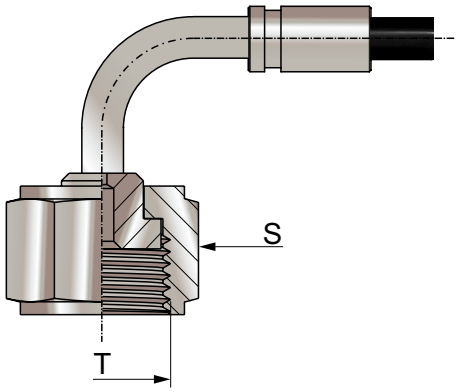

Technical Description	End of Fitting Type	Thread T	S	D
Swivel female UNF - JIC SAE J514	C	5/16-24 UNF	7/16	1/8
		7/16-20 UNF	9/16	1/4
		1/2-20 UNF	5/8	5/16
		9/16-18 UNF	3/4	3/8

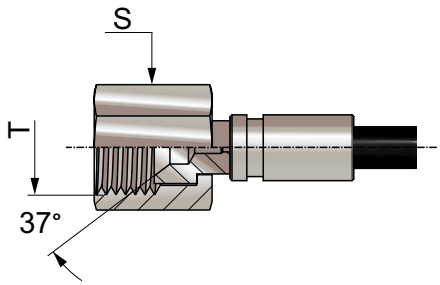

Technical Description	End of Fitting Type	Thread T	S	D
Swivel female UNF - JIC SAE J514	C 90°	5/16-24 UNF	7/16	1/8
		7/16-20 UNF	9/16	1/4
		1/2-20 UNF	5/8	5/16
		9/16-18 UNF	3/4	3/8

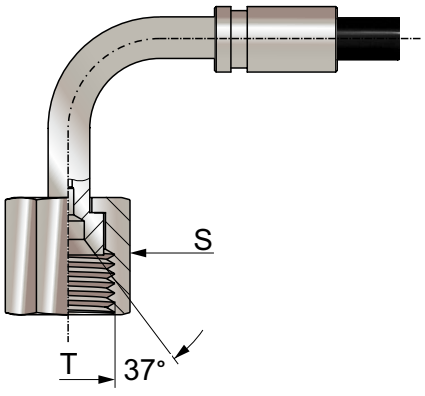

Technical Description	End of Fitting Type	Thread T	S	D
End of fitting with internal pin for pressure test point valve actuation	PE			

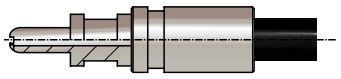

Technical Description	End of Fitting Type	Thread T	S	D
Metric swivel male	M	M8x1	3/8	

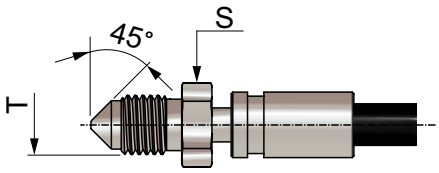

Technical Description	End of Fitting Type	Thread T	S	D
Fixed male NPT / BSPT ANSI / ASM E B 1.20.1 - NBR 12912	B	1/8 NPT	11	
		1/4 NPT	17	
		3/8 NPT	22	
		1/2 NPT	27	
		1/8 BSPT	14	
		1/4 BSPT	17	

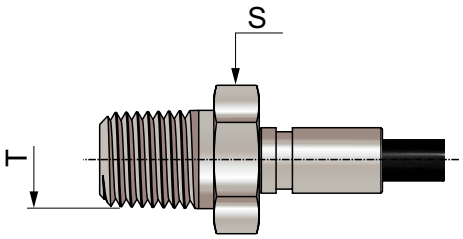

Technical Description	End of Fitting Type	Thread T	S	D
Fixed metric male 24° DIN 2353	H	M10x1	10	4
		M12x1,5	14	6
		M14x1,5	17	8
		M16x1,5	19	10

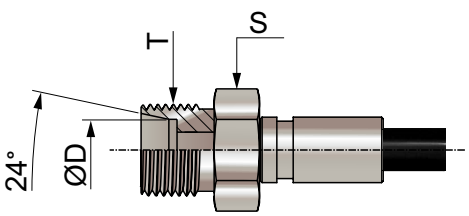

K / J / DIS

Technical Description	End of Fitting Type
Fixed metric male / BSP ISO 1179-2 / Rosca BSP	K

Thread T	S	D
M10x1	14	
M12x1,5	17	
M14x1,5	19	
M16x1,5	22	
G1/8 BSP	14	
G1/4 BSP	19	
G1/2 BSP	27	

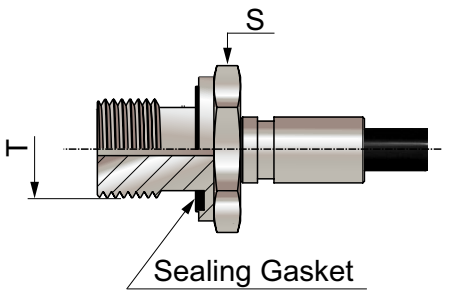

Technical Description	End of Fitting Type
Fixed male UNF SAE J 514 (JIC)	J

Thread T	S	D
5/16-24 UNF	1/2	1/8
7/16-20 UNF	9/16	1/4
1/2-20 UNF	9/16	5/16
9/16-18 UNF	11/16	3/8

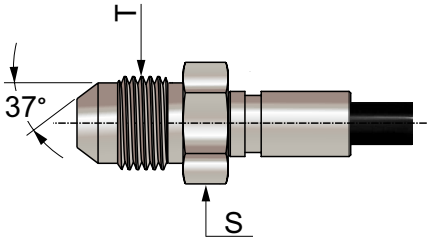

Technical Description	End of Fitting Type
Swivel female BSP 60° Cone (ISO / DIS 8434-6)	DIS

Thread T	S	D
G1/8 BSP	14	
G1/4 BSP	17	
G1/2 BSP	27	

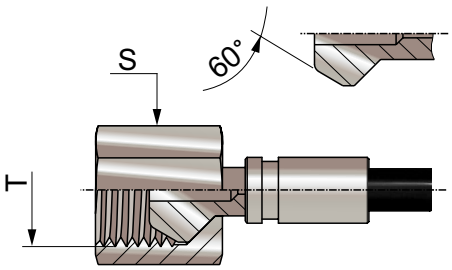

AE - Adapter for connecting two capillary test hoses
Allows the connection of M16x2 / M16x2, M16x1.5 / M16x1.5 or M16x2 / M16x1.5 hoses.



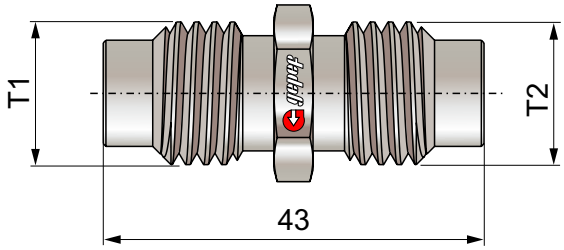

Code	T1	T2
AE-M16x2	M16x2	M16x2
AE-M16x1,5	M16x1,5	M16x1,5
AE-M16x2 - AE-M16x1,5	M16x2	M16x1,5

Coding example:

AE-M16x2 (Adapter for M16x2 Hose Splicing).

For AISI 316 stainless steel, add the letter I at the end of the code.

For Viton (FKM) or EPDM seals, add the letter V or E at the end of the code.

If you require a different adapter configuration not listed in this catalog, please contact our Technical Department.

ACMF - Conversion Adapter for “P” Type End Fittings - Refer to “Capillary Hoses”.
Allows the conversion of an M16x2 pressure test point connection to M16x1.5 and vice versa.



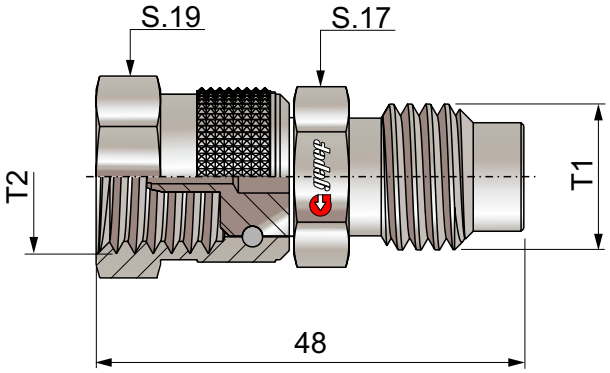

Code	T1	T2
ACMF 2/1,5	M16x2	M16x1,5
ACMF 1,5/2	M16x1,5	M16x2

Coding example:

ACMF 2/1,5 (Conversion Adapter for “P” Type End Fittings, M16x2 Male Thread, M16x1.5 Female Thread).

For AISI 316 stainless steel, add the letter I at the end of the code.

For Viton (FKM) or EPDM seals, add the letter V or E at the end of the code.

If you require a different adapter configuration not listed in this catalog, please contact our Technical Department.

INSTALLATION INSTRUCTIONS (SAE J1273 - ISO 8331)

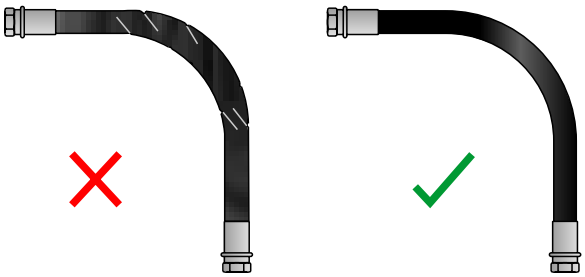

INCORRECT INSTALLATION CORRECT INSTALLATION

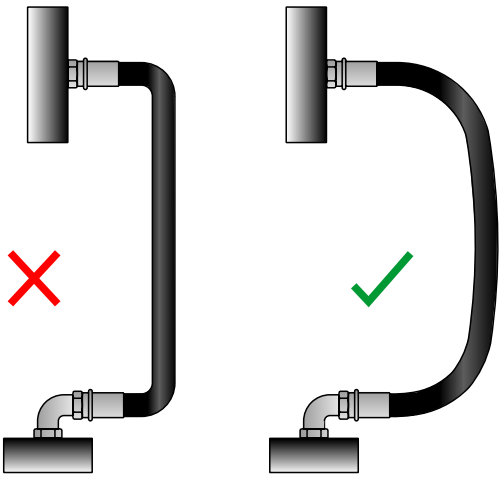

INCORRECT INSTALLATION CORRECT INSTALLATION

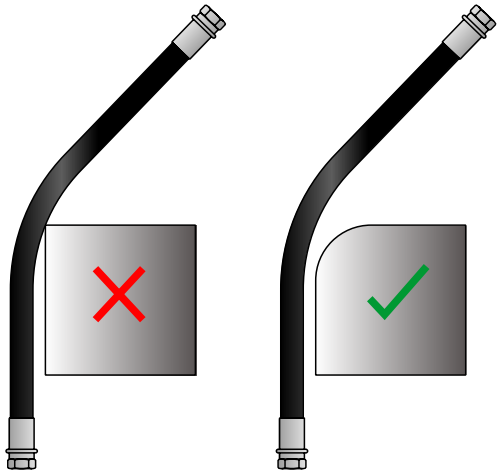

INCORRECT INSTALLATION CORRECT INSTALLATION

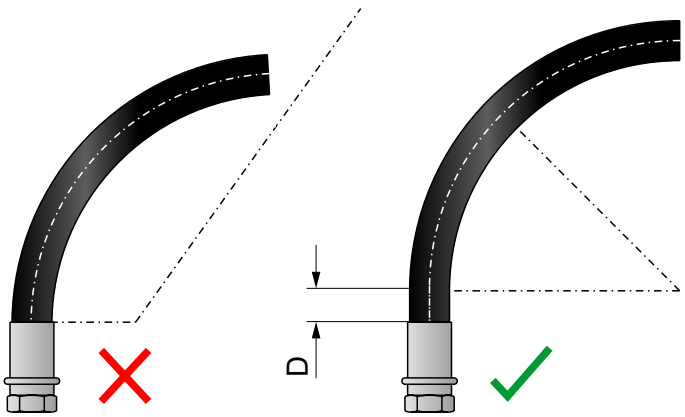

INCORRECT INSTALLATION CORRECT INSTALLATION



INCORRECT INSTALLATION



CORRECT INSTALLATION

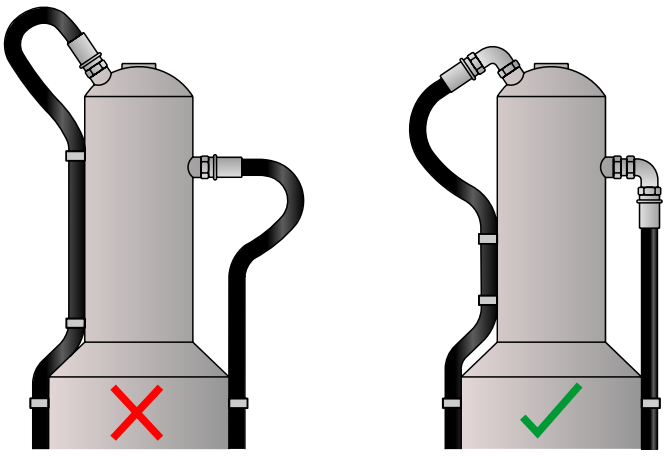

INCORRECT INSTALLATION CORRECT INSTALLATION

INSTALLATION INSTRUCTIONS (SAE J1273 - ISO 8331)

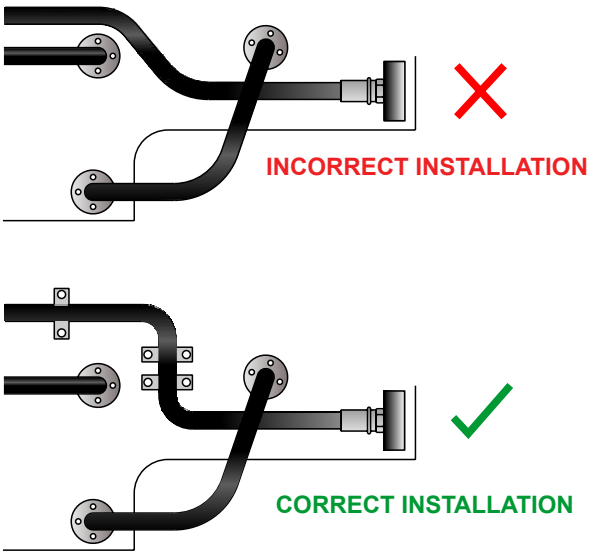

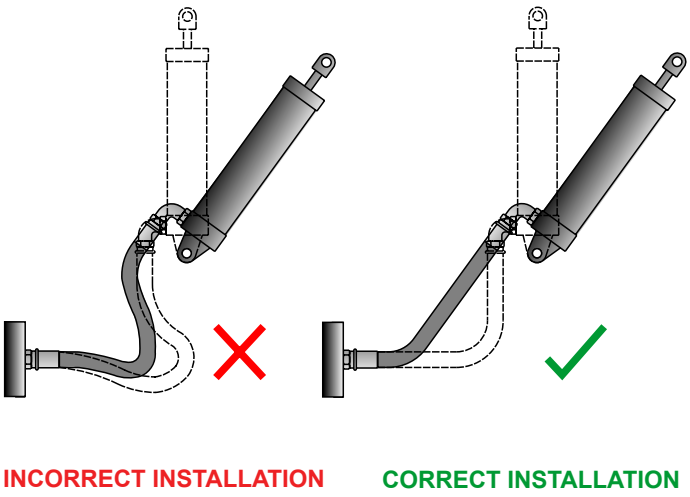



gepef

Pressure Gauge and Vacuum Gauge

PRESSURE GAUGE AND VACUUM GAUGE

Instruments specially manufactured for severe operating conditions where vibration and/or pulsation occur.
The glycerin filling dampens these effects, lubricates moving parts, reduces wear, and increases the service life of the pressure gauge.

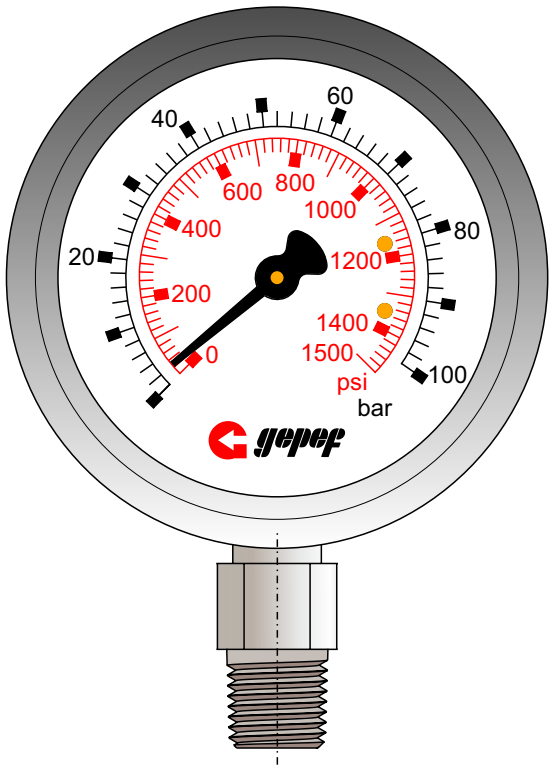

Sensor System	Window
Bourdon tube in bronze; for pressures above 400 bar, stainless steel.	Acrylic
Dial	**Protection Rating**
Dual scale: bar / PSI	IP 65
Case	**Operating Temperature**
Stainless steel 304, glycerin-filled.	-20°C to 100°C
Connection Material	**Accuracy**
Brass	+- 3/2/3% - Class B

MAN / VAC



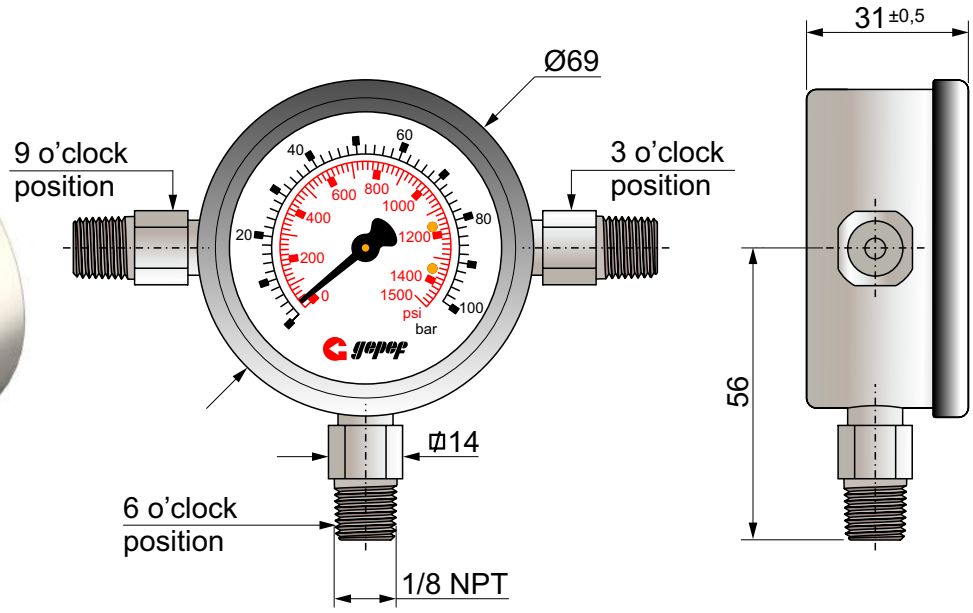

Code	Pressure gauge					
	Scale		Dial Graduation			
	External	Internal	External		Internal	
	bar	PSI	Numeric Interval	Smallest Subdivision	Numeric Interval	Smallest Subdivision
MAN 6	0 - 6	085	1	0,1	20	2
MAN 10	0 - 10	0 - 150	2	0,5	30	5
MAN 16	0 - 16	0 - 230	2	0,5	50	5
MAN 25	0 - 25	0 - 350	5	0,5	50	10
MAN 40	0 - 40	0 - 600	5	1	50	10
MAN 60	0 - 60	0 - 850	10	2	200	20
MAN 75	0 - 75	0 - 1100	10	2	200	20
MAN 100	0 - 100	0 - 1500	10	2	300	50
MAN 160	0 - 160	0 - 2300	20	5	250	50
MAN 200	0 - 200	0 - 3000	50	10	500	100
MAN 250	0 - 250	0 - 3500	50	10	500	100
MAN 300	0 - 300	0 - 4000	50	10	500	100
MAN 400	0 - 400	0 - 6000	100	10	1000	200
MAN 500	0 - 500	0 - 7500	100	20	2000	200
MAN 600	0 - 600	0 - 9000	100	20	2000	200
MAN 700	0 - 700	0 - 10000	100	20	2000	200

	Vacuum Gauge					
	Scale		Dial Graduation			
Code	External	Internal	External		Internal	
	cm HG	Pol. HG	Numeric Interval	Smallest Subdivision	Numeric Interval	Smallest Subdivision
VAC 0	-76	-30	-10	-2	-5	-1

Coding Example:

MAN 250-6hs (0–250 bar / 0–3500 PSI Pressure Gauge, with 6 o'clock position connection).

CAM



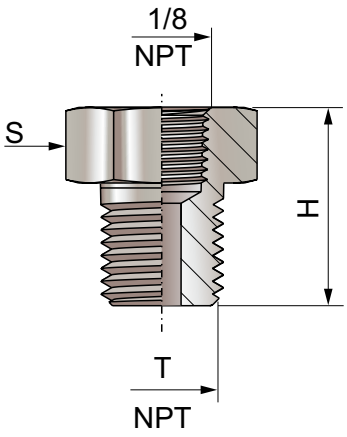

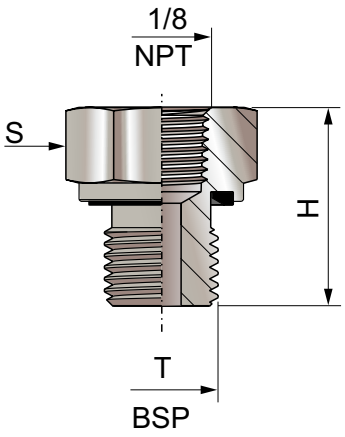

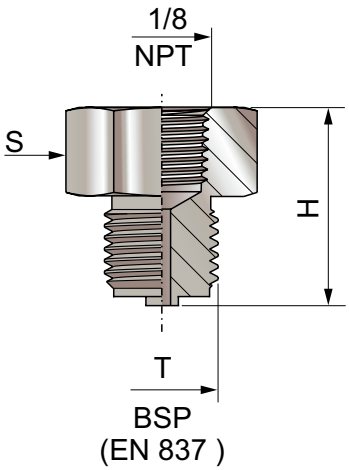

Type - Thread T	H	S	Form
CAM 1/4 NPT	30	17	C
CAM 3/8 NPT	30	19	C
CAM 1/2 NPT	28	22	C
CAM G1/8 BSP	28	17	WD
CAM G1/4 BSP	28	19	WD
CAM G3/8 BSP	28	22	WD
CAM G1/2 BSP	28	27	WD
CAM G1/4 BSP-EN	25	19	EN 837
CAM G1/2 BSP-EN	31	27	EN 837

Form C	Form WD	Form EN 837
ANSI / ASME B1.20.1 (NPT thread)	ISO 1179-2 (BSP thread)	EN 837 (BSP thread for gauges)
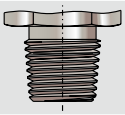	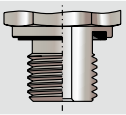	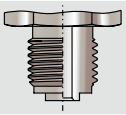

Exemplo de Codificação:

CAM 1/4 NPT (Male adapter 1/4 NPT, female 1/8 NPT)

Add suffix I for AISI 316 stainless steel.

If another adapter type not listed in this catalog is required, please contact our technical department.



gepef

Expander Sealing Plugs

SEALING PLUGS

Expander sealing plugs replace threaded plugs for sealing manufacturing holes with diameters from 3 mm to 22 mm in:
Hydraulic manifolds, valves, pistons, steering systems, injection pumps, brake systems, compressors, and similar components.
Installation is quick and simple, without the need for threads or sealing compounds, ensuring perfect sealing.



EXOE Serie - Operating Pressures up to 450 bar



EXORV Serie - Operating Pressures up to 500 bar

Diameters
3mm up to 22mm

Materials
Carbon Steel
Aluminum
Stainless Steel

Maximum Operating Pressure
Up to 800 bar / 11603 PSI

Surface Treatment
White trivalent passivation (chromium VI free)

EXOE Series



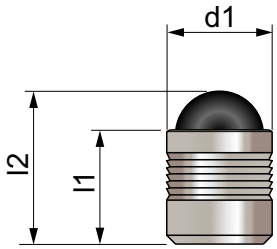

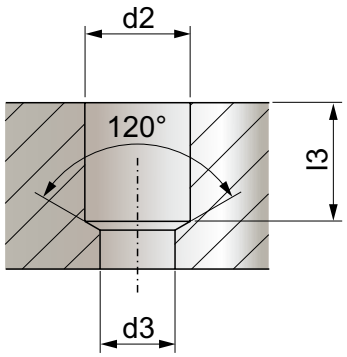

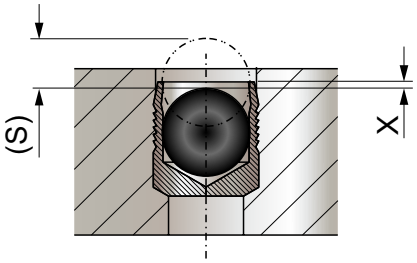

EXOE Series								
Code	d1	l1	l2 ~Ref.	d2 +0,1	d3 max.	l3 min.	S ~Ref.	X ±0,2
EXOE-030	3	3,6	4,6	3	2,2	3,4	1,2	0,4
EXOE-040	4	4	5,2	4	3,3	3,8	1,5	0,2
EXOE-050	5	5,5	7,1	5	4,3	5,3	2	0,4
EXOE-060	6	6,5	8,6	6	5,3	6,3	2,5	0,4
EXOE-070	7	7,5	10,1	7	6,4	7,3	3	0,4
EXOE-080	8	8,5	11,6	8	7,4	8,3	3,5	0,3
EXOE-090	9	10	13,6	9	8,4	9,8	4	0,4
EXOE-100	10	11	15,1	10	9,4	10,8	4,5	0,4
EXOE-120	12	13	17,9	12	10,6	12,8	5,5	0,4
EXOE-140	14	15	20,6	14	12,7	14,5	6,35	0,4
EXOE-160	16	17	23,4	16	14,7	16,5	7	0,6
EXOE-180	18	19	26,4	18	16,7	18,5	8,0	0,6
EXOE-200	20	22	30,1	20	18,7	21,5	9	0,8
EXOE-220	22	25	34	22	20,7	24,5	10	0,8

Pressures				
EXOE	ETG-100 AISI 1144	C15Pb 10.403	EM-GJL-250 EN1561	AlCu4Mg1 ENAW-2024-T3
d1 mm	Maximum test pressure *		Maximum working pressure	
3 - 10 12 - 22	1100 bar / 16000 PSI 900 bar / 13000 PSI		350 bar / 5100 PSI 280 bar / 4100 PSI	

* Intermittent Test Pressure		
EXOE	AiMgSiPb ENAW-6012-T6	G-AiSi7Mg ENAC-42100
d1 mm	Maximum test pressure *	Maximum working pressure
3 - 10 12 - 22	1000 bar / 14500 PSI 800 bar / 11600 PSI	320 bar / 4600 PSI 250 bar / 3600 PSI

Materials
Sleeve: case-hardened steel, trivalent zinc plated
Ball: bearing steel, hardened and tempered

EXOEI Series



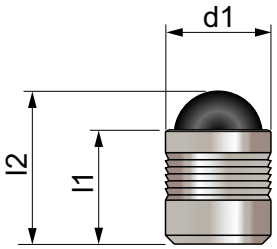

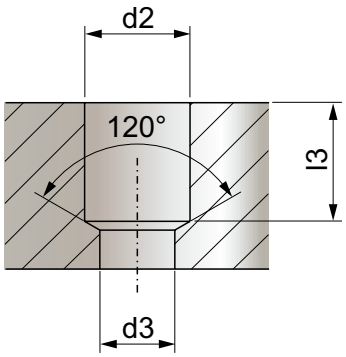

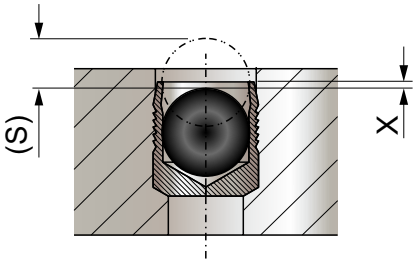

EXOEI Series								
Code	d1	l1	l2 ~Ref.	d2 +0,1	d3 max.	l3 min.	S ~Ref.	X ±0,2
EXOEI-030	3	3,6	4,6	3	2,2	3,4	1,2	0,4
EXOEI-040	4	4	5,2	4	3,3	3,8	1,5	0,2
EXOEI-050	5	5,5	7,1	5	4,3	5,3	2	0,4
EXOEI-060	6	6,5	8,6	6	5,3	6,3	2,5	0,4
EXOEI-070	7	7,5	10,1	7	6,4	7,3	3	0,4
EXOEI-080	8	8,5	11,6	8	7,4	8,3	3,5	0,3
EXOEI-090	9	10	13,6	9	8,4	9,8	4	0,4
EXOEI-100	10	11	15,1	10	9,4	10,8	4,5	0,4
EXOEI-120	12	13	17,9	12	10,6	12,8	5,5	0,4
EXOEI-140	14	15	20,6	14	12,7	14,5	6,35	0,4
EXOEI-160	16	17	23,4	16	14,7	16,5	7	0,6
EXOEI-180	18	19	26,4	18	16,7	18,5	8	0,6
EXOEI-200	20	22	30,1	20	18,7	21,5	9	0,8
EXOEI-220	22	25	34	22	20,7	24,5	10	0,8

Pressures				
EXOEI	ETG-100 AISI 1144	C15Pb 10.403	EM-GJL-250 EN1561	AlCu4Mg1 ENAW-2024-T3
d1 mm	Maximum test pressure *		Maximum working pressure	
3 - 10 12 - 22	1400 bar / 20300 PSI 1150 bar / 16700 PSI		450 bar / 6500 PSI 350 bar / 5100 PSI	

* Intermittent Test Pressure		
EXOEI	AiMgSiPb ENAW-6012-T6	G-AiSi7Mg ENAC-42100
d1 mm	Maximum test pressure *	Maximum working pressure
3 - 10 12 - 22	1200 bar / 17400 PSI 900 bar / 13000 PSI	380 bar / 5500 PSI 280 bar / 4100 PSI

Materials
Sleeve: stainless steel 303, polished
Ball: bearing steel, hardened and tempered

EXOEII Series



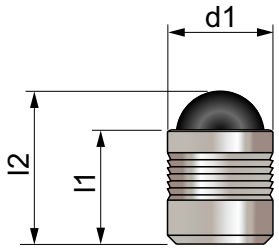

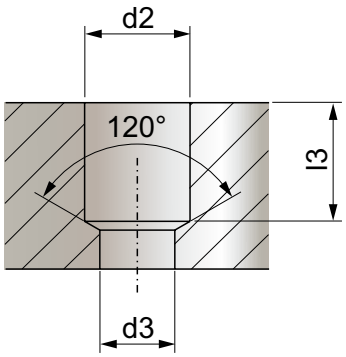

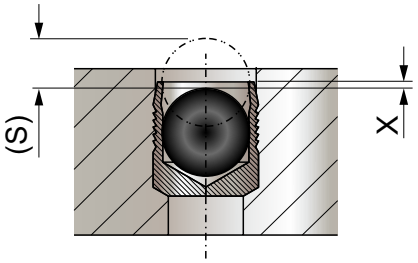

EXOEII Series								
Code	d1	l1	l2 ~Ref.	d2 +0,1	d3 max.	l3 min.	S ~Ref.	X ±0,2
EXOEII-030	3	3,6	4,6	3	2,2	3,4	1,2	0,4
EXOEII-040	4	4	5,1	4	3,3	3,8	1,5	0,2
EXOEII-050	5	5,5	7,1	5	4,3	5,3	2	0,4
EXOEII-060	6	6,5	8,6	6	5,3	6,3	2,5	0,4
EXOEII-070	7	7,5	10,1	7	6,4	7,3	3	0,4
EXOEII-080	8	8,5	11,6	8	7,4	8,3	3,5	0,3
EXOEII-090	9	10	13,5	9	8,4	9,8	4	0,4
EXOEII-100	10	11	15,1	10	9,4	10,8	4,5	0,4
EXOEII-120	12	13	17,8	12	10,6	12,8	5,5	0,4
EXOEII-140	14	15	20,5	14	12,7	14,5	6,35	0,4

Pressures				
EXOEII	ETG-100 AISI 1144	C15Pb 10.403	EM-GJL-250 EN1561	AlCu4Mg1 ENAW-2024-T3
d1 mm	Maximum test pressure *		Maximum working pressure	
3 - 10	1400 bar / 20300 PSI		450 bar / 6500 PSI	
12 - 14	1000 bar / 14500 PSI		350 bar / 5100 PSI	

* Intermittent Test Pressure		
EXOEII	AiMgSiPb ENAW-6012-T6	G-AiSi7Mg ENAC-42100
d1 mm	Maximum test pressure *	Maximum working pressure
3 - 10	1200 bar / 17400 PSI	380 bar / 5500 PSI
12 - 14	900 bar / 13000 PSI	280 bar / 4100 PSI

Materials
Sleeve: stainless steel 303
Ball: stainless steel

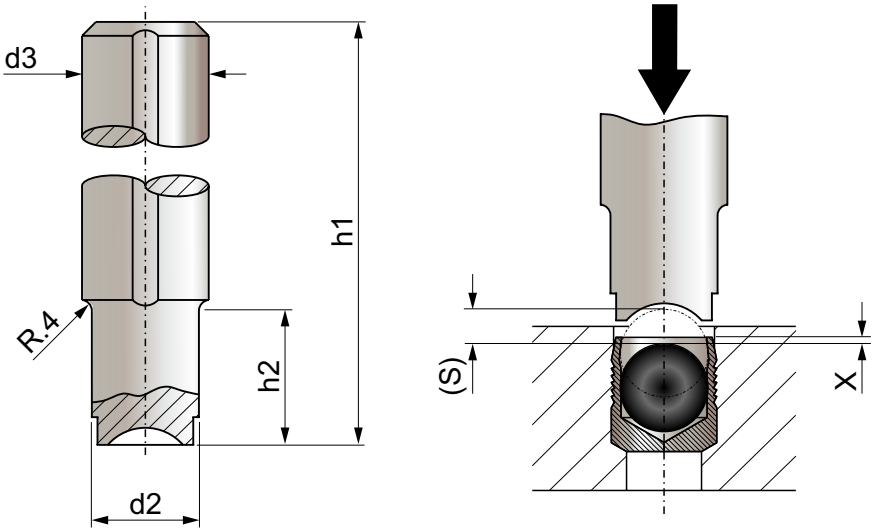

EXOE / EXOEI / EXOEII Series							
Code	d1	d3 -h9	h1	d2	h2	X ±0,2	S ~Ref.
EX-030	3	10	100	2,8	10	0,4	0,4
EX-040	4	10	100	3,8	10	0,2	0,2
EX-050	5	10	100	4,8	12	0,4	0,4
EX-060	6	10	100	5,8	15	0,4	0,4
EX-070	7	10	100	6,8	18	0,4	0,4
EX-080	8	10	100	7,8	20	0,3	0,3
EX-090	9	14	100	8,8	22	0,4	0,4
EX-100	10	14	100	9,8	25	0,4	0,4
EX-120	12	14	150	11,7	30	0,4	0,4
EX-140	14	20	150	13,7	35	0,4	0,4
EX-160	16	20	150	15,7	40	0,6	0,6
EX-180	18	20	150	17,7	45	0,6	0,6
EX-200	20	25	150	19,7	50	0,8	0,8
EX-220	22	25	150	21,7	55	0,8	0,8

Materials

heat treated tool steel, approx. 50Hrc

INSTALLATION INSTRUCTIONS EXOE / EXOEI / EXOEII SERIES

Installation instructions for EXOE / EXOEI / EXOEII series

Drilled Holes

The holes must comply with the specified tolerances and be free from oil, grease, and burrs.
Grooves and score marks must be avoided, as they affect sealing performance.
Circularity tolerance must be maintained within 0.05 mm.
The hole must have a surface roughness of Rz = 10 – 30 µm.

Assembly Operation

Insert the plug with the ball facing outward; the edge of the bushing must not exceed the external contour of the part.
The base of the bushing must be properly supported during installation.
Press the ball until its upper part is below the edge of the bushing.

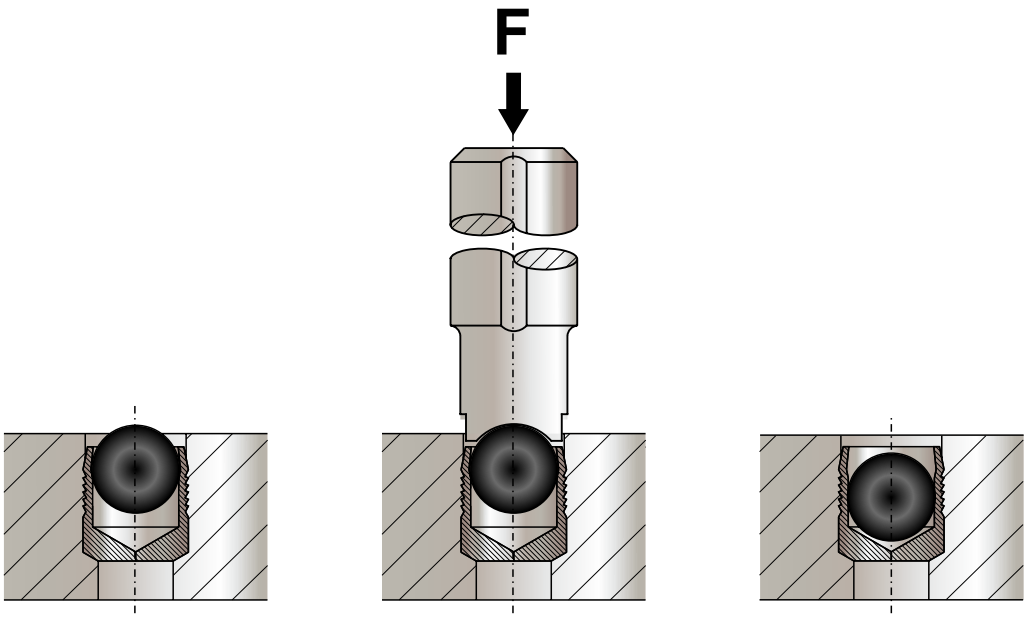

EXOE / EXOEI / EXOEII Series														
D2 (mm)		3	4	5	6	7	8	9	10	12	14	16	18	20	22
S (mm)	Stroke	1,2	1,5	2,0	2,5	3,0	3,5	4,0	4,5	5,5	6,35	7,0	8,0	9,0	10,0
X (mm) +/-.2	Position of top of ball relative to top of sleeve	0,4	0,2	0,4	0,4	0,4	0,3	0,4	0,4	0,4	0,4	0,6	0,6	0,8	0,8

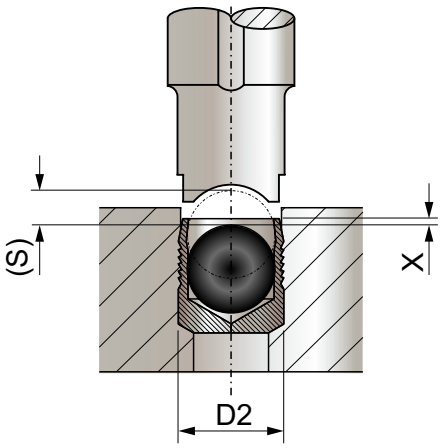

EXORV Series

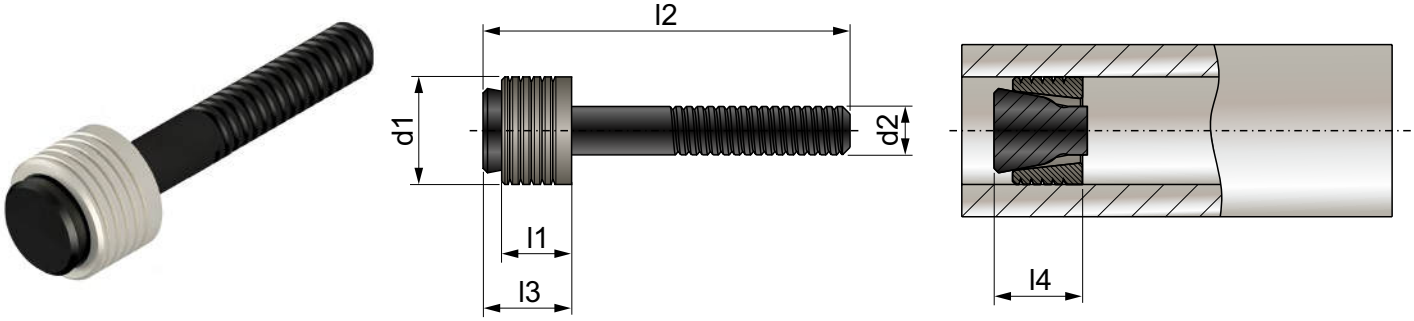

EXORV Series							
Code	d1	l1	d2	l2	l3 max.	l4 max.	ØHole ±0,12
EXORV-040	4	4,5	2,5	39	9	6,5	4
EXORV-050	5	5,5	3	41	10	7,5	5
EXORV-060	6	6,5	3,4	43	12	8	6
EXORV-070	7	7,5	4,1	38	14	9	7
EXORV-080	8	8,5	4,2	40	15	10,5	8
EXORV-090	9	9,5	4,5	43	17	11	9
EXORV-100	10	10,5	4,75	45	19	12,5	10

Pressures				
EXORV	ETG-100 AISI 1144	C15Pb 10.403	EM-GJL-250 EN1561	AlCu4Mg1 ENAW-2024-T3
d1 mm	Maximum test pressure *		Maximum working pressure	
4 -10	1600 bar / 23200 PSI		500 bar / 7200 PSI	

* Intermittent Test Pressure		
EXORV	AiMgSiPb ENAW-6012-T6	G-AiSi7Mg ENAC-42100
d1 mm	Maximum test pressure *	Maximum working pressure
4 - 10	1400 bar / 20300 PSI	450 bar / 6500 PSI

Materials
Bushing: Case-hardened steel
Stem: Hardened and tempered steel or cold extrusion steel

INSTALLATION INSTRUCTIONS FOR EXORV SERIES

Installation instructions for EXORV series

Hole

The holes must comply with the specified tolerances and be free from oil, grease, and burrs.
Grooves and score marks must be avoided, as they affect sealing performance.
Circularity tolerance must be maintained within 0.05 mm.
For applications involving high hardness materials.
The hole must have a surface roughness of Rz = 10 – 30 µm.

Operação de Montagem

nsert the plug into the installation tool, with the bushing properly supported on the tool tip.
Then insert it into the hole to be sealed and operate the equipment until the pull stem breaks when the predetermined breaking force is reached.

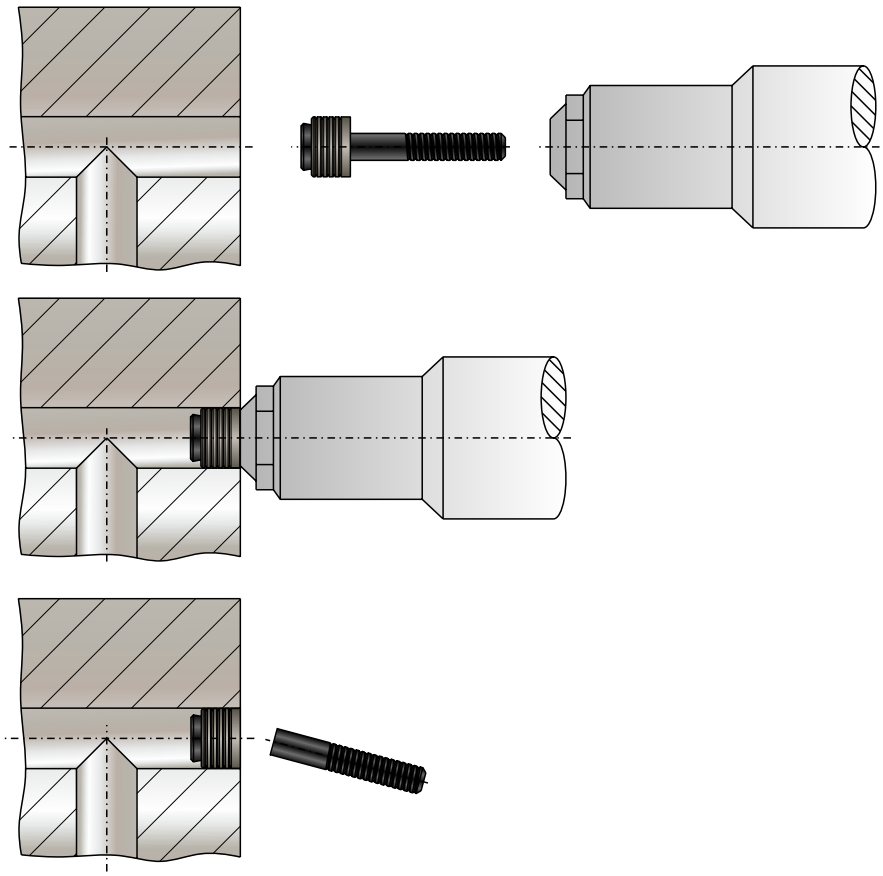

Application between holes

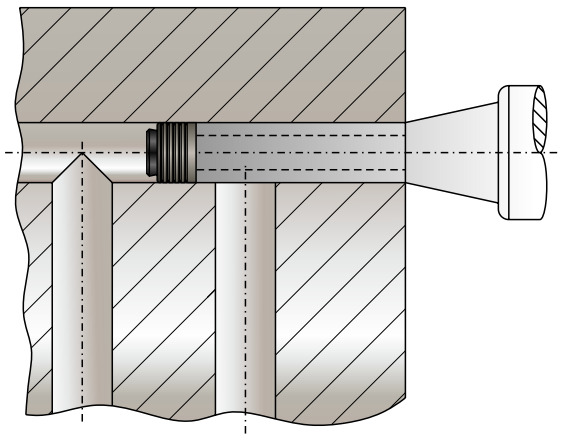

Application in inclined holes

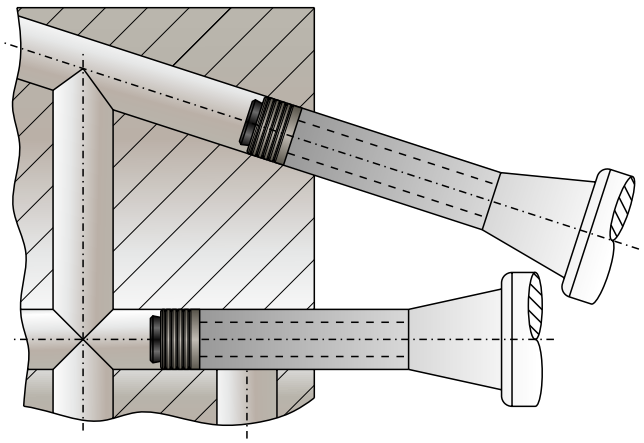

DESIGN GUIDELINES FOR EXPANDER SEALING PLUGS

Project instructions

The radial expansion of the GEPEF Sealing Plug causes the housing material around the plug to deform plastically.
A proper minimum wall thickness, or distance from an edge is necessary to optimize the strength of the mechanical connection.
The operating hydraulic pressure, thermal cycling, plug type and characteristics of the base metal must all be considered when determining these values. Please contact GEPEF for additional information.

Distance to an external wall

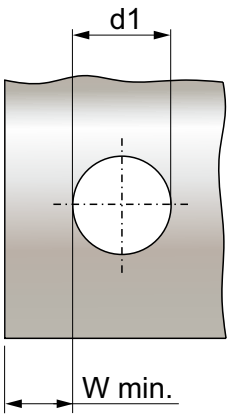

Distance to an exterior wall

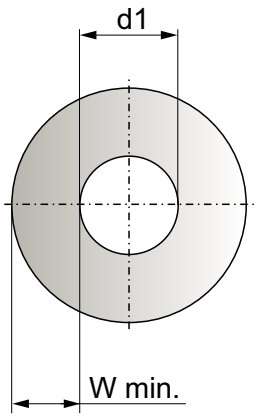

Wall thickness between bores

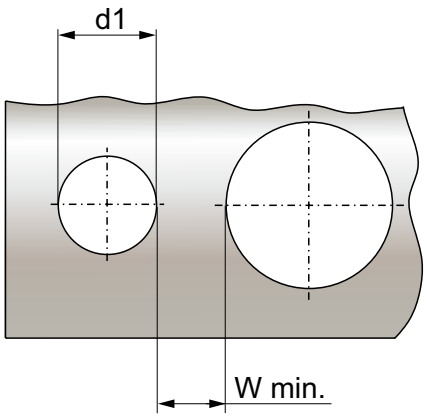

The guidelines for a minimum wall thickness or distance from an edge (Wmin) are expressed below. These minimum values produce only slight deformation on the exterior profile of less than 20µm. This does not affect
the performance of the EIS Sealing Plug. Using Wmin values less than those recommended can cause overloading
of the base material. This can adversely influence the function of the EIS Sealing Plug. Please contact GEPEF for additional information.

W min. Values

Sealing Plug Diameters: **d1 ≥ 4mm: Wmin = fmin * d1**
d1 < 4mm: Wmin = fmin * d1 + 0,5mm

	Materials						
	SAE 1144	SAE 10L15	ASTM A48 Cast steel	ASTM A356 Ductile Steel	2024-T4	6061-T6	356-T6 Cast aluminum
Series	Fator f min.						
EXOE	0,5	0,6	1,0	0,6	0,6	1,0	1,0
EXORV	0,5	0,6	1,0	0,6	1,0	1,0	1,0

INSTRUCTIONS FOR REMOVAL EXPANDER SEALING PLUGS

Instructions for removal sealing plugs EXOE, EXOEI, EXOEII and EXOERV Series

Removal of the EXOE, EXOEI, EXOEII and EXORV series plugs requires simple machining operations using a high speed steel or carbide drill bit. After removal, clean the hole of burrs or bushing remains and remove oil and grease from the hole.
When installing a new obturator in place of the removed one, install one in diameter above the removed measurement.



gepep

Refrigeration

Solutions for Refrigeration Systems

hoses are specifically designed for industrial and commercial applications to replace the traditional copper tubes.

Features and Benefits

• Flexible solution, easy to install
• Low permeability to refrigerant gases (including CO_2)
• Eliminates leaks caused by system vibrations and movement
• High chemical compatibility and weather resistance
• Reduced welding/brazing operations

Applications

• Refrigerant gas pressure control systems (pressure switches) using capillary tubes

• Refrigerant gas management in commercial refrigeration systems (display cases, refrigerators, wine coolers, beverage dispensers, etc.)

• Refrigeration systems (chillers) applied to machine tools and industrial equipment

• Industrial air conditioning systems

• Refrigeration systems for refrigerated transport

• Refrigerant gas charging systems for automotive air conditioning applications





Packaging - Capillary Hoses and Fittings Kits

Cardboard boxes for hoses (10m and 50m) and for fittings (25pcs and 50pcs) preserve the product's integrity and allow proper storage, on the resale shelf and after package's opening. An ideal solution for the retail market.



Assembly Area

The dedicated assembly area ensures precision and fast execution to satisfy even the most demanding system manufacturers.



Labeling and Traceability

Total traceability is assured by means of a resistant QR code label and automated code scanning system. Customization of the labels is available on request.

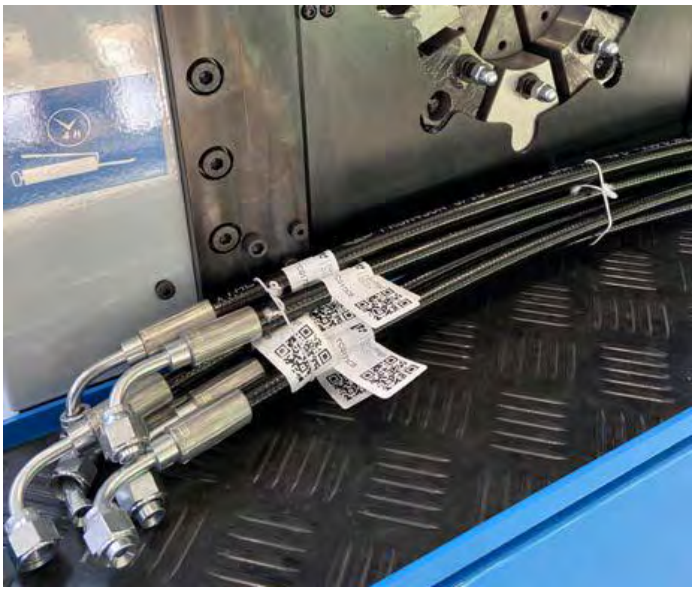

Thermoplastic Hoses and Fittings for Refrigeration Systems

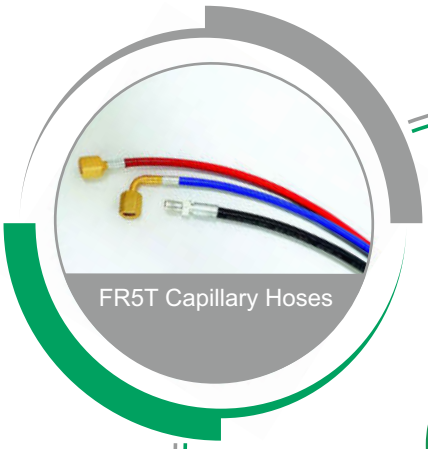
FR5T Capillary Hoses


FR5A Hoses for CO_2 lines

1 ECO Hoses


FR5T Hoses for split systems

Compliant with EN 1736 Class 1, ZEC FR5 tubes ensure low permeability to refrigerant gases.

ZEC is proactive in addressing environmental challenges. That is why it develops high-quality products engineered for long service life.

FR5T Capillary Hoses



Capillary tubes are the most efficient solution for connecting pressure gauges, pressure switches, and oil return lines.

Flexible and highly resistant to high pressures, capillary tubes significantly reduce vibrations throughout the entire system.

Capillary tubes are available in black, red, and blue, allowing easy identification of low- and high-pressure circuits.

Our capillary tubes can be easily assembled using the PZFR5DN2 crimping pliers, the PZFR5DN4 portable crimping tool, or the PZBCFR5 electric crimping machine.



Capillary Hoses

FR5T

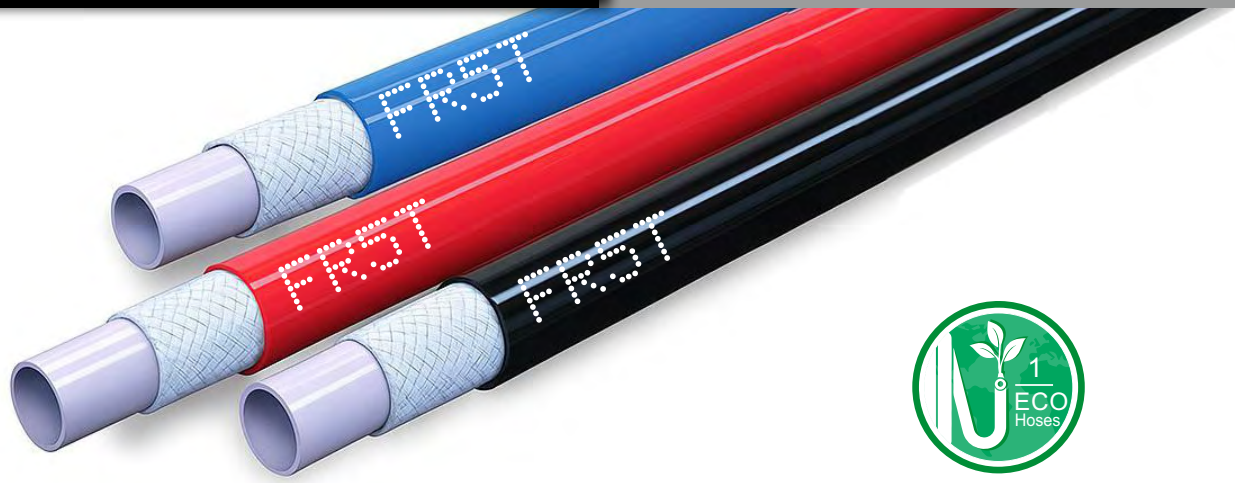

Type	DN	Ø I.D mm	Ø O.D mm	Rated Pressure (bar / PSI)	Min. Bend Radius mm	Weight g/m	
FR5T170*	2	2,1	6,0	130 / 1885	15	27	BP112FR5AA
FR5T270*	4	4,0	8,2	130 / 1885	30	45	BP532FR5

N.B. In the code there is an *, this must be replaced with the color code of the tube: BLACK (N), BLUE (B) or RED (R)

Example: Tube 1/12" black – code FR5T170N

Type	Code	Color	Description
DN2 - Hoses	FR5T170N	●	FREE COIL
	FR5T1NR010	●	10M CARTON BOX
	FR5T1NR050	●	50M CARTON BOX
	FR5T170R	●	FREE COIL
	FR5T1RR010	●	10M CARTON BOX
	FR5T1RR050	●	50M CARTON BOX
	FR5T170B	●	FREE COIL
	FR5T1BR010	●	10M CARTON BOX
	FR5T1BR050	●	50M CARTON BOX
DN4 - Hoses	FR5T270N	●	FREE COIL
	FR5T2NR010	●	10M CARTON BOX
	FR5T2NR050	●	50M CARTON BOX
	FR5T270R	●	FREE COIL
	FR5T2RR010	●	10M CARTON BOX
	FR5T2RR050	●	50M CARTON BOX
	FR5T270B	●	FREE COIL
	FR5T2BR010	●	10M CARTON BOX
	FR5T2BR050	●	50M CARTON BOX

Technical-constructive features

Smooth bore coextruded textile braid capillary hoses DN2 and DN4 with polyurethane cover.

Working temperatures

From -40°C to +120°C from -40°F to +248°F / Max. peak temperature 130°C / 266°F

Working pressure

Safety ratio exceeding EN 1736 and ISO 13971 requirements

Vacuum rating

5 mbar

Specifications

Compliant with EN 1736, ISO 13971 class 1 and UL 1963.

1/4” SAE Straight Female Fitting



Code	Qty. (pcs)
FR5T1K001AA	1
FR5T1K025AA	25
FR5T1K050AA	50

Code	Description
YDLSA716OTM	NUT 7/16” SAE Brass
YFDLSAOC716112OT	S. FEM. 1/4” SAE Brass
BP112FR5AA	DN2 Aluminium ferrule

1/4” SAE Straight Female Fitting With Depressor



Code	Qty. (pcs)
FR5T1K001GA	1
FR5T1K025GA	25
FR5T1K050GA	50

Code	Description
YDLSA716OTM	NUT 7/16” SAE Brass
YFDLSADOC716112OT	S. FEM. 1/4” SAE with dep. brass
BP112FR5AA	DN2 Aluminium ferrule

1/4” SAE 90° Female Fitting



Code	Qty. (pcs)
FR5T1K001BA	1
FR5T1K025BA	25
FR5T1K050BA	50

Code	Description
RPF914SAE112FR5	90° Fem. 1/4” SAE brass
BP112FR5AA	DN2 Aluminium ferrule

“T” Fitting



Code	Qty. (pcs)
FR5T1K001T	1
FR5T1K025T	25
FR5T1K050T	50

Code	Description
RFR51120012	“T” Zinc plated brass
3X BP112FR5AA	DN2 Aluminium ferrule

“T” Fitting With Central Nut



Code	Qty. (pcs)
FR5T1K001TC	1
FR5T1K025TC	25
FR5T1K050TC	50

Code	Description
RFR51120117	1/4” SAE “T” fitting, central nut zinc plated brass
2X BP112FR5AA	DN2 Aluminium ferrule

“T” Fitting With Side Nut



Code	Qty. (pcs)
FR5T1K001TL	1
FR5T1K025TL	25
FR5T1K050TL	50

Code	Description
RFR51120118	1/4” SAE “T” fitting, side nut zinc plated brass
2X BP112FR5AA	DN2 Aluminium ferrule

1/4” SAE Straight Male Fitting



Code	Qty. (pcs)
FR5T1K001CA	1
FR5T1K025CA	25
FR5T1K050CA	50

Code	Description
RPMD14SAE112FR5	ST. male 1/4” SAE brass
BP112FR5AA	DN2 Aluminium ferrule

Copper Pipe DN 6mm



Code	Description	Qty. (pcs)
FR5T1K025GA	Copper pipe DN 6mm	1
FR5T1K025DG	Copper pipe DN 6mm	25

Assembly Instructions FR5T DN

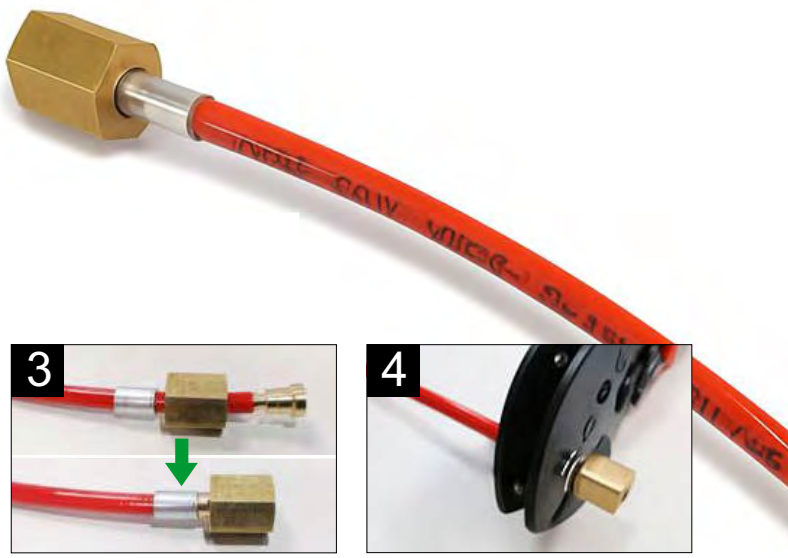



Cut the hose at the required length using the proper hose cutter. The cut must be perpendicular to the hose’s longitudinal axis

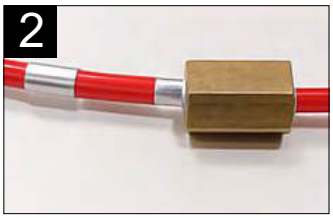

Insert the ferrule with the incision on the side of the cut hose. Move the ferrule along the hose. Insert the nut with the thread on the side of the cut.

Push the fitting insert into the hose all way down and slide the nut. Slide also the ferrule until it stops against the insert. There must be no space between the ferrule and the insert.

Crimp the ferrule with the manual crimping pliers. The pliers’ die must cover the whole ferrule length. Keep the pliers completely tight for 10 seconds at least.

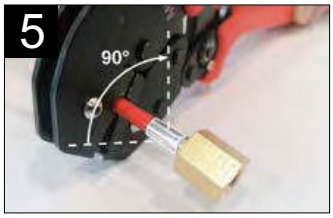

Turn the ferrule of 90° and crimp again.

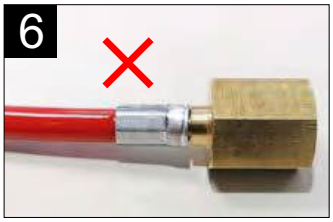

Make visual inspections of the fittings after the crimping. The ferrule must be uniformly crimped. In case of an incorrect crimping you have to cut the hose and retry with a new ferrule.



Check the crimping diameter by averaging two measurements at 90° and verify that it corresponds with the data shown on the ZEC Crimping Table.



f after several uses the measured crimping diameter tends increases, adjust the gear of the plier.

1/4” SAE Straight Female Fitting



Code	Qty. (pcs)
FR5T2K001AA	1
FR5T2K025AA	25
FR5T2K050AA	50

Code	Description
YDLSA716OTM	Nut 7/16” SAE brass
YFDLSAFR716532	S. Fem. 1/4” SAE carbon steel
BP532FR5	DN4 Carbon steel ferrule

1/4” SAE Straight Female Fitting With Depressor



Code	Qty. (pcs)
FR5T2K001GA	1
FR5T2K025GA	25
FR5T2K050GA	50

Code	Description
YDLSA716OTM	Nut 7/16” SAE brass
YFDLSADOC716532	S. Fem. 1/4” SAE with dep. carbon steel
BP532FR5	DN4 Carbon steel ferrule

3/8” SAE Straight Female Fitting



Code	Qty. (pcs)
FR5T2K001AC	1
FR5T2K025AC	25
FR5T2K050AC	50

Code	Description
YDLSA58M	Nut 3/8” SAE steel
YFDLSAFR58532	S. Fem. 3/8” SAE carbon steel
BP532FR5	DN4 Carbon steel ferrule

1/4” SAE 90° Female Fitting



Code	Qty. (pcs)
FR5T2K001BA	1
FR5T2K025BA	25
FR5T2K050BA	50

Code	Description
RPF914SAE532FR5	90° Fem. 1/4” SAE carbon steel
RPF914SAE532FR5	nut zinc plated brass
BP532FR5	DN4 Carbon steel ferrule

3/8” SAE 90° Female Fitting



Code	Qty. (pcs)
FR5T2K001BC	1
FR5T2K025BC	25
FR5T2K050BC	50

Code	Description
YDLSA58M	Nut 3/8” SAE steel
YF90LSAFR58532	90° Fem. 3/8” SAE carbon steel
BP532FR5	DN4 Carbon steel ferrule

“T” Fitting



Code	Qty. (pcs)
FR5T2K001T	1
FR5T2K025T	25
FR5T2K050T	50

Code	Description
RFR54112	“T” Fitting carbon steel
3X BP532FR5	DN4 Carbon steel ferrule

"T" Fitting With Central Nut



Code	Qty. (pcs)
FR5T2K001TC	1
FR5T2K025TC	25
FR5T2K050TC	50

Code	Description
RFR54117	"T" Fitting, central nut 1/4" SAE carbon steel
2X BP532FR5	DN4 Carbon steel ferrule

"T" Fitting With Side Nut



Code	Qty. (pcs)
FR5T2K001TL	1
FR5T2K025TL	25
FR5T2K050TL	50

Code	Description
RFR54118	"T" Fitting, side nut 1/4" SAE carbon steel
2X BP532FR5	DN4 Carbon steel ferrule

1/4" SAE Straight Male Fitting



Code	Qty. (pcs)
FR5T2K001CA	1
FR5T2K025CA	25
FR5T2K050CA	50

Code	Description
RPMD14SAE532FR5	S. Male 1/4" SAE carbon steel
BP532FR5	DN4 Carbon steel ferrule

Copper Pipe DN 6mm



Code	Description	Qty. (pcs)
FR5T2K001DG	Copper pipe DN 6mm	1
FR5T2K025DG	Copper pipe DN 6mm	25

Assembly Instructions FR5T DN



Cut the hose at the required length using the proper hose cutter. The cut must be perpendicular to the hose's longitudinal axis.



Insert the ferrule with the incision on the side of the cut hose.

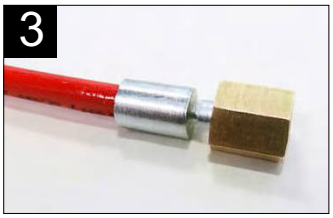

Insert the fittings with his nut until the stop.

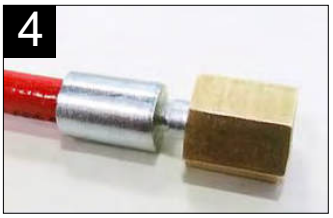

Slide the ferrule until it stops. There must be no more space between the ferrule and the insert.



Crimp the ferrule using a proper crimping tool and die set. Close the die until they automatically open.
The pliers' die must cover the whole ferrule length.



Turn the ferrule of 90° and crimp again.

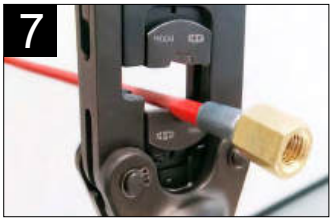

Make visual inspections of the fittings after the crimping. The ferrule must be uniformly crimped. In case of an incorrect crimping you have to cut the hose and retry with a new ferrule.



Check the crimping diameter by averaging two measurements at 90° and verify that it corresponds with the data shown on the ZEC Crimping Table.

Protective Plastic Plug



Code	Qty. (pcs)	SAE
TAPPOPE14SAEKC	50	1/4”
TAPPOPE38SAEKC	50	3/8”

Copper Washer - Conic Funnel



Code	Qty. (pcs)	SAE
GCICU14FR5KC	50	1/4”
GCICU38FR5KC	50	3/8”
GCICU12FR5KC	50	1/2”
GCICU58FR5KC	50	5/8”
GCICU34FR5KC	50	3/4”

Copper Washer - Conic



Code	Qty. (pcs)	SAE
GCCU14FR5KC	50	1/4”
GCCU38FR5KC	50	3/8”
GCCU12FR5KC	50	1/2”
GCCU58FR5KC	50	5/8”
GCCU34FR5KC	50	3/4”

Brass Depressor

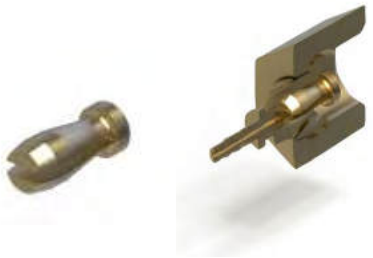

Code	Qty. (pcs)	SAE
VFR5DN2TKC	50	1/4”

Crimping Tool For DN2 Ferrule



Code
PZFR5DN2

Hose Cutter



Code	Descrição
PZG1	Cutter up to a maximum external diameter of 28.0 mm.
PZP1	Cutter up to a maximum external diameter of 12 mm.
LMG1	Replacement blades for tube cutter PZG1
LMP1	Replacement blades for tube cutter PZG1

Fluid Power Crimping Tool For DN2-4-6 Ferrules





DN4 Electric assembly procedure

Code
PZBCFR5

Crimping Tool For DN-2-4-6 Ferrules





DN4 Manual assembly procedure

Code
PZFR5DN4







Die set	Hose Code	Inch	Fittings	Description	Fittings	Description
GCICU34FR5KC	FR5T170N FR5T170B FR5T170R **DN2**	1/2”	FR5T1K001AA	S. Fem. 1/4” SAE	FR5T1K001T	“T” Fitting
			FR5T1K001GA	S. Fem. 1/4” SAE with dep.	FR5T1K001TC	“T” Fitting with central nut
			FR5T1K001BA	90° Fem. 1/4” SAE	FR5T1K001TL	“T” Fitting with lateral nut
			FR5T1K001CA	S. Male 1/4” SAE		
MPZBCFR5DN4	FR5T270N FR5T270B FR5T270R **DN4**	5/32”	FR5T2K001AA	S. Fem. 1/4” SAE	FR5T2K001BA	90° Female 1/4” SAE
			FR5T2K001GA	S. Fem. 1/4” SAE with dep.	FR5T2K001T	“T” Fitting
			FR5T2K001AC	S. Fem. 3/8” SAE	FR5T2K001TC	“T” Fitting with central nut
			FR5T2K001BC	90° Fem. 3/8” SAE	FR5T2K001TL	“T” Fitting with lateral nut
			FR5T2K001CA	S. Male 1/4” SAE		
MPZBCFR5DN6	FR5T490N **DN6**	5/16”	FR5T4KA01AA	S. Fem. 1/4” SAE AL. Ferrule	FR5T4KA01AC	S. Fem. 3/8” SAE AL. Ferrule
			FR5T4KA01BA	90° Fem. 1/4” SAE AL. Ferrule	FR5T4KA01BC	90° Fem. 3/8” SAE AL. Ferrule

FR5T Hoses



FR5T Hoses

Hoses for split systems have been developed specifically for discharge, suction and to connect the evaporator to the condensing units in domestic and industrial air conditioning, reducing significantly the installation time.

Available also in pre-insulated version.



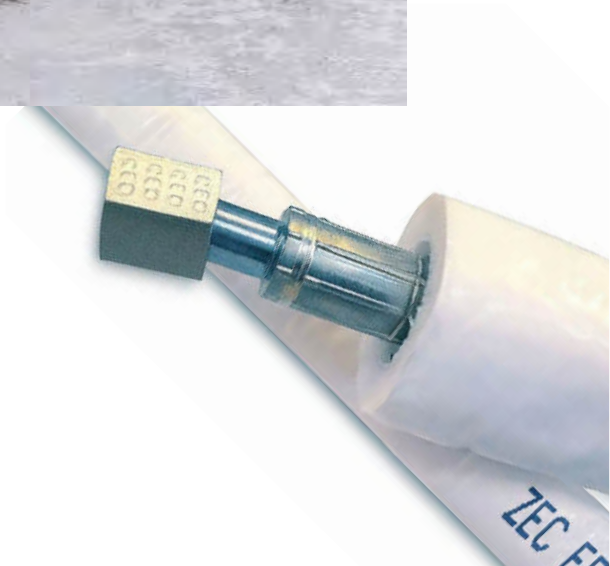

FR5T



Technical-constructive features

Smooth bore textile braid coextruded hoses.

Designed solution for refrigeration systems and for domestic and industrial HVAC applications.

Working temperatures

From -40°C to +120°C from -40°F to +248°F / Max. peak temperature 130°C / 266°F

With insulation maximum temperature limited to +110°C (230°F)

Working pressure

Safety ratio exceeding

EN 1736 and ISO 13971 requirements

Vacuum rating

5 mbar

Specifications

Compliant with EN 1736, ISO 13971 class 1 and UL 1963.

Type	DN	Ø I.D mm	Ø O.D mm	Rated Pressure (bar / PSI)	Min. Bend Radius mm	Weight g/m	
FR5T390N	5	4,8	9,3	120 / 1740	50	55	BP316R7
FR5T490N	6	6,4	11,7	120 / 1740	75	80	BP14R7
FR5T590N	8	8,1	14,1	120 / 1740	90	105	BP516R1TV
FR5T690N	11	11,1	17,7	120 / 1740	100	150	BP38R1TV
FR5T790N	14	13,9	20,6	120 / 1740	125	190	BP12R1TV
FR5T890N	17	17,0	24,9	120 / 1740	160	270	BP58R9R

Type	DN	Ø I.D mm	Ø O.D mm	Rated Pressure (bar / PSI)	Min. Bend Radius mm	Weight g/m	
FR5T390NI	5	4,8	27,3	120 / 1740	50	85	BP316R7
FR5T590NI	8	8,1	32,1	120 / 1740	90	130	BP316R7
FR5T690NI	11	11,1	35,4	120 / 1740	100	200	BP38R1TV
FR5T790NI	14	13,9	38,6	120 / 1740	125	250	BP12R1TV
FR5T890NI	17	17,0	43,0	120 / 1740	165	335	BP58R9R

Straight Female Fitting



Hose	Code	Description	Qty. (pcs)
FR5T390N 1/4”	FR5T3K001AA	S. Fem. 1/4” SAE carbon steel	1
	FR5T3K025AA	S. Fem. 1/4” SAE carbon steel	25
FR5T490N 5/16”	FR5T4K001AA	S. Fem. 1/4” SAE carbon steel	1
	FR5T4K025AA	S. Fem. 1/4” SAE carbon steel	25
	FR5T4K001AC	S. Fem. 3/8” SAE carbon steel	1
	FR5T4K025AC	S. Fem. 3/8” SAE carbon steel	25
FR5T590N 3/8”	FR5T5K001AC	S. Fem. 3/8” SAE carbon steel	1
	FR5T5K025AC	S. Fem. 3/8” SAE carbon steel	25
FR5T690N 1/2”	FR5T6K001AD	S. Fem. 1/2” SAE carbon steel	1
	FR5T6K025AD	S. Fem. 1/2” SAE carbon steel	25
FR5T790N 5/8”	FR5T7K001AE	S. Fem. 5/8” SAE carbon steel	1
	FR5T7K025AE	S. Fem. 5/8” SAE carbon steel	25
FR5T890N 3/4”	FR5T8K001AF	S. Fem. 3/4” SAE carbon steel	1
	FR5T8K025AF	S. Fem. 3/4” SAE carbon steel	25

90° Female Fitting



Hose	Code	Description	Qty. (pcs)
FR5T390N 1/4”	FR5T3K001BA	90° Fem. 1/4” SAE carbon steel	1
	FR5T3K025BA	90° Fem. 1/4” SAE carbon steel	25
FR5T490N 5/16”	FR5T4K001BA	90° Fem. 1/4” SAE carbon steel	1
	FR5T4K025BA	90° Fem. 1/4” SAE carbon steel	25
	FR5T4K001BC	90° Fem. 3/8” SAE carbon steel	1
	FR5T4K025BC	90° Fem. 3/8” SAE carbon steel	25
FR5T590N 3/8”	FR5T5K001BC	90° Fem. 3/8” SAE carbon steel	1
	FR5T5K025BC	90° Fem. 3/8” SAE carbon steel	25
FR5T690N 1/2”	FR5T6K001BD	90° Fem. 1/2” SAE carbon steel	1
	FR5T6K025BD	90° Fem. 1/2” SAE carbon steel	25
FR5T790N 5/8”	FR5T7K001BE	90° Fem. 5/8” SAE carbon steel	1
	FR5T7K025BE	90° Fem. 5/8” SAE carbon steel	25
FR5T890N 3/4”	FR5T8K001BF	90° Fem. 3/4” SAE carbon steel	1
	FR5T8K025BF	90° Fem. 3/4” SAE carbon steel	25

Hose	Code	Description	Qty. (pcs)
FR5T390N 1/4”	FR5T3K001DA	Copper pipe 1/4”	1
	FR5T3K025DA	Copper pipe 1/4”	25
FR5T490N 5/16”	FR5T4K001DB	Copper pipe 5/16”	1
	FR5T4K025DB	Copper pipe 5/16”	25
FR5T590N 3/8”	FR5T5K001DC	Copper pipe 3/8”	1
	FR5T5K025DC	Copper pipe 3/8”	25
FR5T690N 1/2”	FR5T6K001DD	Copper pipe 1/2”	1
	FR5T6K025DD	Copper pipe 1/2”	25
FR5T790N 5/8”	FR5T7K001DE	Copper pipe 5/8”	1
	FR5T7K025DE	Copper pipe 5/8”	25
FR5T890N 3/4”	FR5T8K001DF	Copper pipe 3/4”	1
	FR5T8K025DF	Copper pipe 3/4”	25

Copper Pipes - Up to max. 60 bar



Cordless hidraulic crimping tool



SPLIT Electric assembly procedure

Code
PZBCFR5T130

Hidraulic crimping tool



SPLIT Manual assembly procedure

Code
PZMCFR5T130



Die set	Hose code	inch	Fittings	Description	Fittings	Description
MPZBCFR51303	FR5T390N/I DN5	1/4”	FR5T3K001AA	S. Fem.1/4” SAE	FR3T3K001DA	Copper pipe 1/4”
			FR5T3K001BA	90° Fem. 1/4” SAE		
MPZBCFR51304	FR5T490N DN6	5/16”	FR5T4K001AA	S. Fem.1/4” SAE	FR5T4K001DB	Copper pipe 5/16”
			FR5T4K001BA	90° Fem. 1/4” SAE		
			FR5T4K001AC	S. Fem. D.3/8” SAE		
			FR5T4K001BC	90° Fem. 3/8” SAE		
MPZBCFR51305	FR5T590N/I DN8	3/8”	FR5T5KP01AC	S. Fem. 3/8” SAE	FR5T5KP01DC	Copper pipe 3/8”
			FR5T5KP01BC	90° Fem. 3/8” SAE		
MPZBCFR51306	FR5T690N/I DN11	1/2”	FR5T6KP01AD	S. Fem. 1/2” SAE	FR5T6KP01DD	Copper pipe 1/2”
			FR5T6KP01BD	90° Fem. 1/2” SAE		
MPZBCFR51307	FR5T790N/I DN14	5/8”	FR5T7KP01AE	S. Fem. 5/8” SAE	FR5T7KP01DE	Copper pipe 5/8”
			FR5T7KP01BE	90° Fem. 5/8” SAE		

Hoses FR5A

Our commitment to researching eco-sustainable solutions for refrigeration and air conditioning systems has led to the development of a specialized hose line for CO_2 (R744).

The FR5A series, manufactured with a steel braid reinforcement, withstands pressures up to 130 bar and temperatures up to 130°C, maximizing the performance of the entire system.



Hoses FR5A









FR5A



Technical-constructive features

Steel braid coextruded hoses. Designed solution for CO2 systems on industrial and commercial refrigeration systems.

Working temperatures

From -40°C to +120°C from -40°F to +248°F

Max. peak temperature 130°C / 266°F

Working pressure:

Safety ratio exceeding EN 1736 and

ISO 13971 requirements

Vacuum rating

5 mbar

Specifications

Compliant with EN 1736, ISO 13971 class 1 and UL 1963.

Type	DN	Ø I.D mm	Ø O.D mm	Rated Pressure (bar / PSI)	Min. Bend Radius mm	Weight g/m	
FR5A430N	6	6,4	11,9	130 / 1885	40	130	BP14MT1
FR5A530N	8	8,1	14,0	130 / 1885	50	200	BP516R7V
FR5A630N	11	11,1	17,4	130 / 1885	80	255	BP38R1TV
FR5A730N	14	13,9	20,1	130 / 1885	120	320	BP12R7V

Straight Female Fitting



Hose	Code	Description	Qty. (pcs)
FR5A430N 5/16”	FR5A4K001AA	S. Fem. 1/4” SAE Carbon Steel	1
	FR5A4K001AA	S. Fem. 1/4” SAE Carbon Steel	25
	FR5A4K001AC	S. Fem. 3/8” SAE Carbon Steel	1
	FR5A4K025AC	S. Fem. 3/8” SAE Carbon Steel	25
FR5A530N 3/8’’	FR5A5K001AC	S. Fem. 3/8” SAE Carbon Steel	1
	FR5A5K025AC	S. Fem. 3/8” SAE Carbon Steel	25
FR5A630N 1/2”	FR5A6K001AD	S. Fem. 1/2” SAE Carbon Steel	1
	FR5A6K025AD	S. Fem. 1/2” SAE Carbon Steel	25
FR5A730N 5/8’’	FR5A7K001AE	S. Fem. 5/8” SAE Carbon Steel	1
	FR5A7K025AE	S. Fem. 5/8” SAE Carbon Steel	25

90° Female Fitting



Hose	Code	Description	Qty. (pcs)
FR5A430N 5/16”	FR5A4K001BA	90° Fem. 1/4” SAE Carbon Steel	1
	FR5A4K025BA	90° Fem. 1/4” SAE Carbon Steel	25
	FR5A4K001BC	90° Fem. 3/8” SAE Carbon Steel	1
	FR5A4K025BC	90° Fem. 3/8” SAE Carbon Steel	25
FR5A530N 3/8’’	FR5A5K001BC	90° Fem. 3/8” SAE Carbon Steel	1
	FR5A5K025BC	90° Fem. 3/8” SAE Carbon Steel	25
FR5A630N 1/2”	FR5A6K001BD	90° Fem. 1/2” SAE Carbon Steel	1
	FR5A6K025BD	90° Fem. 1/2” SAE Carbon Steel	25
FR5A730N 5/8’’	FR5A7K001BE	90° Fem. 5/8” SAE Carbon Steel	1
	FR5A7K025BE	90° Fem. 5/8” SAE Carbon Steel	25

Hose	Code	Description	Qty. (pcs)
FR5A490N 5/16”	FR5A4K001DB	Copper Pipe 5/16”	1
	FR5A4K025DB	Copper Pipe 5/16”	25
FR5A590N 3/8”	FR5A5K001DC	Copper Pipe 3/8”	1
	FR5A5K025DC	Copper Pipe 3/8”	25
FR5A690N 1/2”	FR5A6K001DD	Copper Pipe 1/2”	1
	FR5A6K025DD	Copper Pipe 1/2”	25
FR5A790N 5/8”	FR5A7K001DE	Copper Pipe 5/8”	1
	FR5A7K025DE	Copper Pipe 5/8”	25

Copper Pipes - Up to Max. 60 bar



Copper pipe welding instructions

For the correct welding of the copper pipe to the refrigerant circuit, it is important to protect the thermoplastic hose from the excessive heat caused by the welding. Heating beyond the declared working temperature can compromise the use of the hose.
Before starting welding, wrap a wet rag around the fittings.
Once the welding is complete, quickly cool the part with cold water. To avoid heat you can also use a hot block paste or a cold air gun.

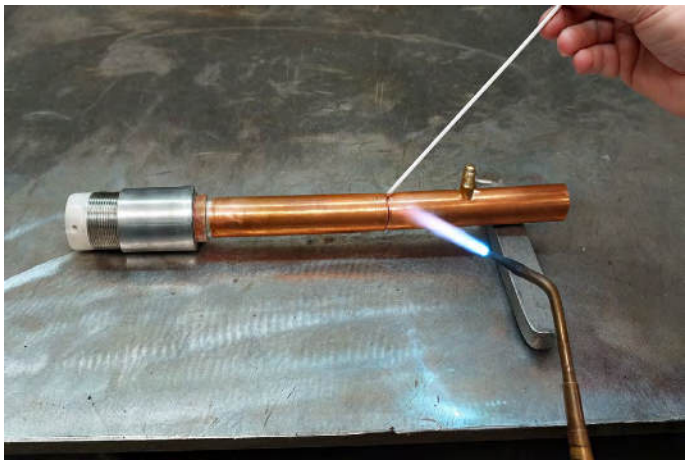





FR5C



Technical-constructive features

Corrugated inner core in modified polyamide. Reinforcement with one AISI 304 steel braid.

Applications

FR5C hoses have been developed for vibration damping and noise absorption of refrigeration and air conditioning systems.

Working temperatures

From -40°C to +120°C from -40°F to +248°F / Max. peak temperature 130°C / 266°F

Working pressure

Safety ratio 1:3 (EN 1736)

Vacuum rating

5 mbar

Specifications

Compliant with EN 1736 and ISO 13971 class 2, meet UL1963 requirements.

Type	DN	Ø I.D mm	Ø O.D mm	Rated Pressure (bar / PSI)	Min. Bend Radius mm	Weight g/m	
FR5C800	18	18,0	25,3	50 / 725	150	410	BP34FR5IC
FR5C900	21	21,2	30,0	50 / 725	200	450	BP78FR5IC
FR5C1000	28	28,2	38,0	50 / 725	250	630	BP118FR5IC

TLP



Technical-constructive features

The inner core of TLP charging hoses is made of a special alloy composed of polyamide (PA) and thermoplastic elastomer (TPE).

In addition to making the hose extremely flexible, this material ensures low permeability to refrigerants, thus minimizing gas leaks through the hose.

Applications

TLP charging hoses are specifically developed for refrigerant gas recharging stations. TLP charging hoses feature low values of minimum bending radius and, consequently, higher resistance to kinking, if compared with traditional elastomeric hoses of equivalent performance.

Working temperatures

The working temperature of TLP charging hoses is in the range from -30°C to +95°C.

Specifications

Compliant with SAE J2196 and SAE J2888, meet UL 1963 requirements.

Type	Color	Ø I.D mm	Ø O.D mm	Rated Pressure (bar / PSI)	Min. Bend Radius mm	
TLP1085361**	🔵 🟡 🔴 ⚫	5,3	10,8	60 / 870	30	BP53FR5TOT
TLP461**	🔵 🟡 🔴 ⚫	8,0	14,2	60 / 870	40	BP80FR5TOT

* Available pre-assembled, with fittings installed

N.B. In the code there is **, this must be replaced with the color code of the tube: BLACK (00), BLUE (02), YELLOW (04) or RED (21)
Example: Tube TLP1085361** black – code TLP108536100.

1/4” SAE Straigh Female Fitting



Code	Qty. (pcs)
TLP53K001AA	1
TLP53K025AA	25
TLP53K050AA	50

1/4” SAE 45° Straigh Female Fitting



Code	Qty. (pcs)
TLP53K001QA	1
TLP53K025QA	25
TLP53K050QA	50

5/16” SAE Straigh Female Fitting

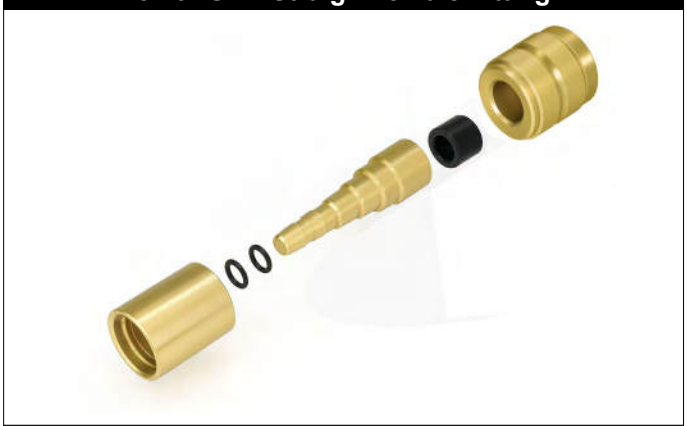

Code	Qty. (pcs)
FR5T1K001BA	1
FR5T1K025BA	25
FR5T1K050BA	50

5/16” SAE 45° Female Fitting



Code	Qty. (pcs)
FR5T1K001T	1
FR5T1K025T	25
FR5T1K050T	50

12x1,5mm Straigh Male Fitting



Code	Qty. (pcs)
FR5T1K001TC	1
FR5T1K025TC	25
FR5T1K050TC	50

14x1,5mm Straigh Male Fitting



Code	Qty. (pcs)
FR5T1K001TL	1
FR5T1K025TL	25
FR5T1K050TL	50

1/4” SAE 15mm Nut Straight Female Fitting



Code	Qty. (pcs)
TLP53K001AAA	1
TLP53K025AAA	25
TLP53K050AAA	50

1/4” SAE 15mm Nut 90° Female Fitting

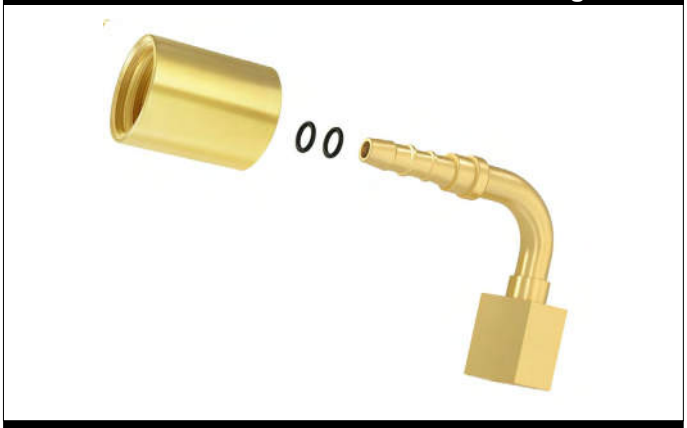

Code	Qty. (pcs)
TLP53K001BAA	1
TLP53K025BAA	25
TLP53K050BAA	50

1/8” NPTF Straight Male Fitting

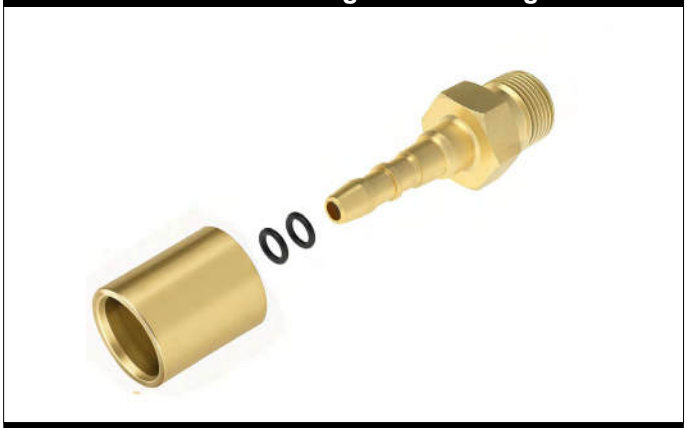

Code	Qty. (pcs)
TLP53K001NS	1
TLP53K025NS	25
TLP53K050NS	50

1/4” o-ring Seal 15mm Nut Straight Female Fitting

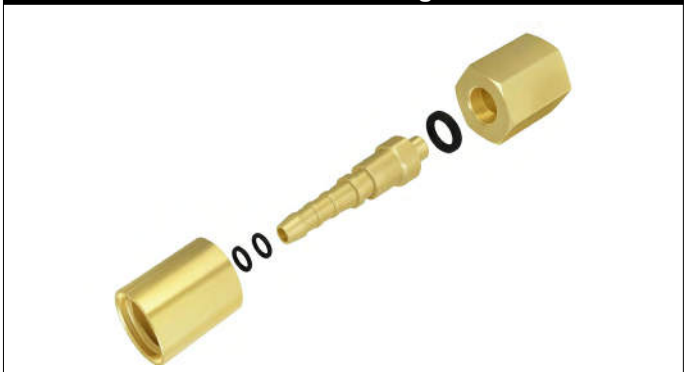

Code	Qty. (pcs)
TLP53K001JAA	1
TLP53K025JAA	25
TLP53K050JA	50

1/2” - 16 ACME Straight Female Fitting



Code	Qty. (pcs)
TLP53K001V	1
TLP53K025V	25
TLP53K050V	50

3/8” SAE Straight Female Fitting



Code	Qty. (pcs)
TLP80K001AC	1
TLP80K025AC	25
TLP80K050AC	50

3/8” 45° Female Fitting



Code	Qty. (pcs)
TLP80K001QC	1
TLP80K025QC	25
TLP80K050QC	50

TLP Series Accessories

NBR Gastek TLP53 External Fem. 1/4” - ACME 1/2”



Code	Qty. (pcs)
YORC855KC	50

HNBR Gastek TLP53 External Fem. 5/16”



Code	Qty. (pcs)
YORC9355KC	50

FKM Gastek TLP53 Internal

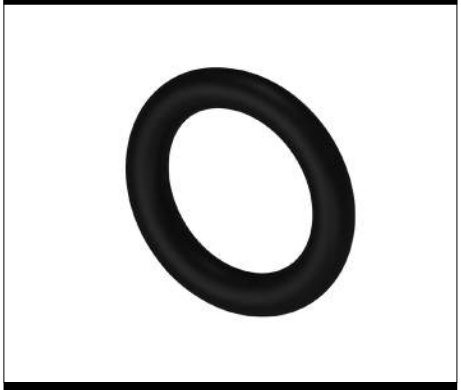

Code	Qty. (pcs)
YOR351VKC	50

HNBR Gastek TLP53 External M12x1,5



Code	Qty. (pcs)
YORH92517KC	50

HNBR Gastek TLP53 External M14x1,5



Code	Qty. (pcs)
YORH10817KC	50

Depressor



Code	Qty. (pcs)
VFRC53KC	50

Fluid Power Crimping Tool For DN2-4-6 Ferrules





TLP Electric assembly procedure

Code
PZBCFR5

Crimping Tool For DN2-4-6 Ferrules





TLP Manual assembly procedure

Code
PZFR5DN4



Die set	Hose Code	mm	Fittings	Description
MPZBCTLPDN53	TLP108536100 TLP108536102 TLP108536104 TLP108536121	5,3	TLP53K001AA	1/4” SAE Straight Female
			TLP53K001QA	1/4” SAE 45° Female
			TLP53K001AB	5/16” SAE Straight Female
			TLP53K001QB	5/16” SAE 45° Female
			TLP53K001Z	M14x1,5mm Straight Male
			TLP53K001W	M14x1,5mm Straight Male
			TLP53K001AAA	1/4” SAE 15mm Nut Straight Female
			TLP53K001BAA	1/4” SAE 15mm Nut 90° Female
			TLP53K001NS	1/8” NPTF Straight Male
			TLP53K001JAA	1/4” O-RING Seal 15mm Nut Straight Female
			TLP53K001V	1/2” - 16 ACME Straight Female

Hose Performance (according ISO 13971 - EN1736)

Hose performance assembled at our plant

TS	WT	PS
-40° +130° C	-40° + 120° C	120 bar
-40° +266° F	-40° +248° F	1740 psi

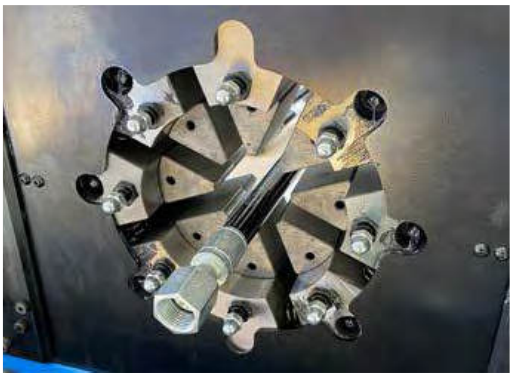

TS	WT	PS
-40° +130° C	-40° + 120° C	130 bar
-40° +266° F	-40° +248° F	1885 psi



TS = minimum and maximum allowable temperatures

WT = working temperatures

PS = maximum allowable pressure

Hose performance assembled with our PZBCFR5T130





TS	WT	PS
-40° +120° C	-40° + 110° C	60 bar
40° +248° F	-40° +230° F	870 psi

INSTALLATION INSTRUCTIONS (SAE J1273 - ISO 8331)

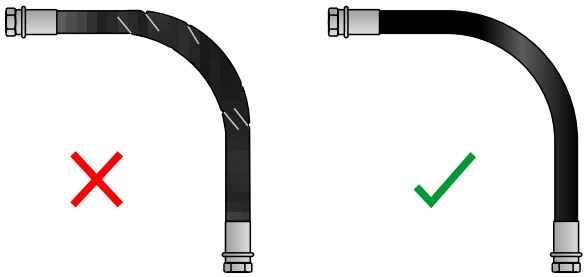

INCORRECT INSTALLATION CORRECT INSTALLATION

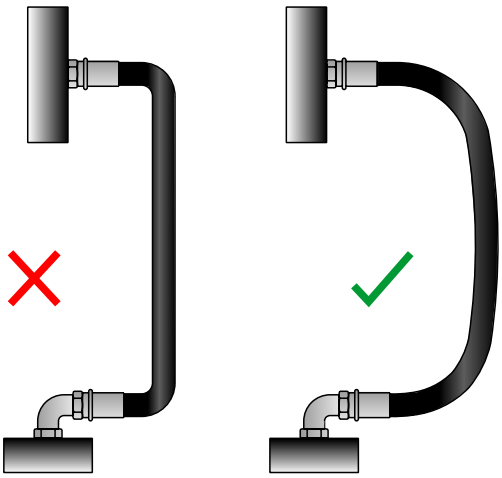

INCORRECT INSTALLATION CORRECT INSTALLATION

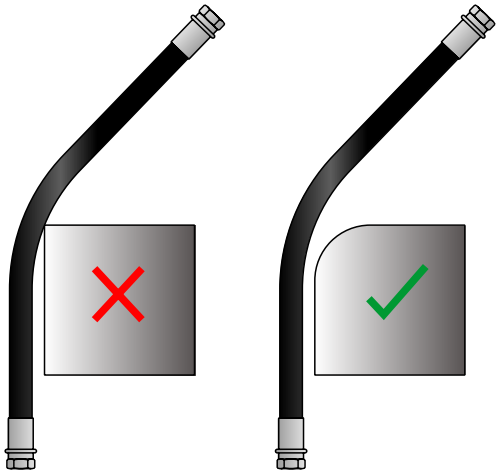

INCORRECT INSTALLATION CORRECT INSTALLATION

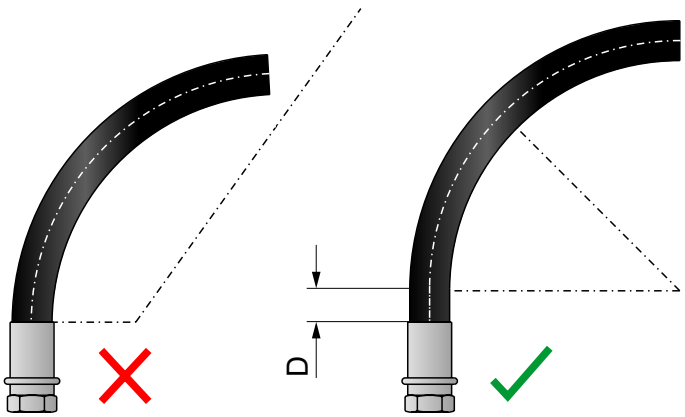

INCORRECT INSTALLATION CORRECT INSTALLATION



INCORRECT INSTALLATION



CORRECT INSTALLATION

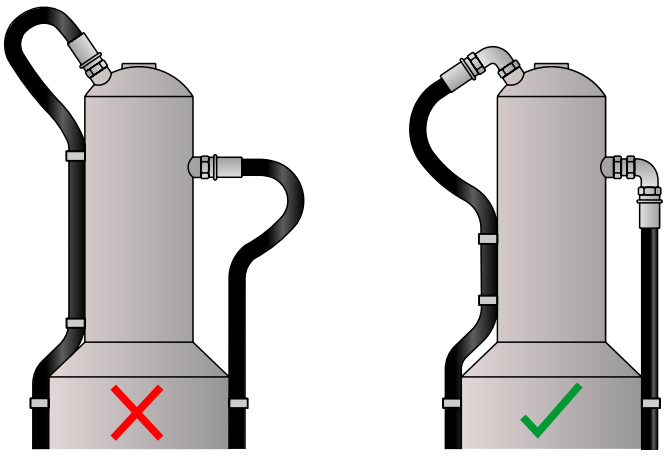

INCORRECT INSTALLATION CORRECT INSTALLATION

INSTALLATION INSTRUCTIONS (SAE J1273 - ISO 8331)

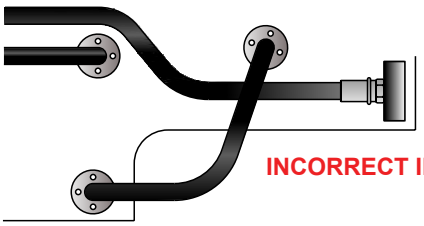

INCORRECT INSTALLATION

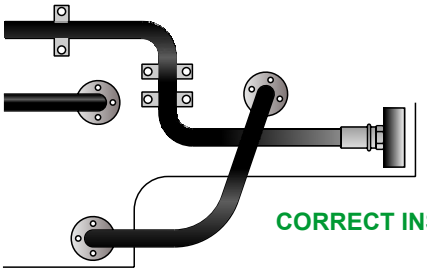

CORRECT INSTALLATION

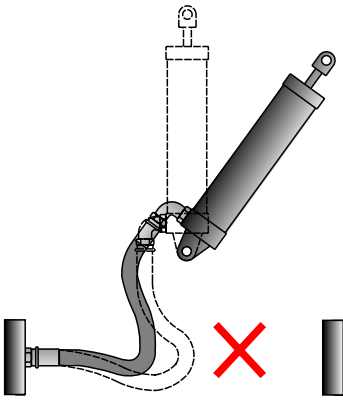

INCORRECT INSTALLATION

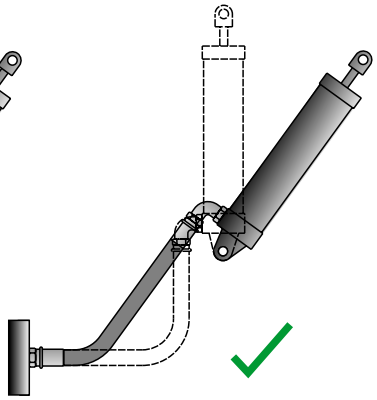

CORRECT INSTALLATION


www.gepef.com.br
gepef
Pressure Test Points

PRESSURE TEST POINT

Used at points where pressure measurement and bleeding are required in fluid and gas circuits, without fluid losses, for nominal pressures up to 630 bar.
Possible to connect under pressure.
Protected against vibrations that prevent loosening of the protective cap.
Available sealing systems: ball sealing or piston sealing.
Available materials:
• Carbon Steel
• Stainless Steel AISI 316
Different seal combinations to suit various temperatures and fluids.
Fully tested for complete tightness, both for gases and fluids.
Surface treatments available: white trivalent (Cr VI free) and zinc-nickel.

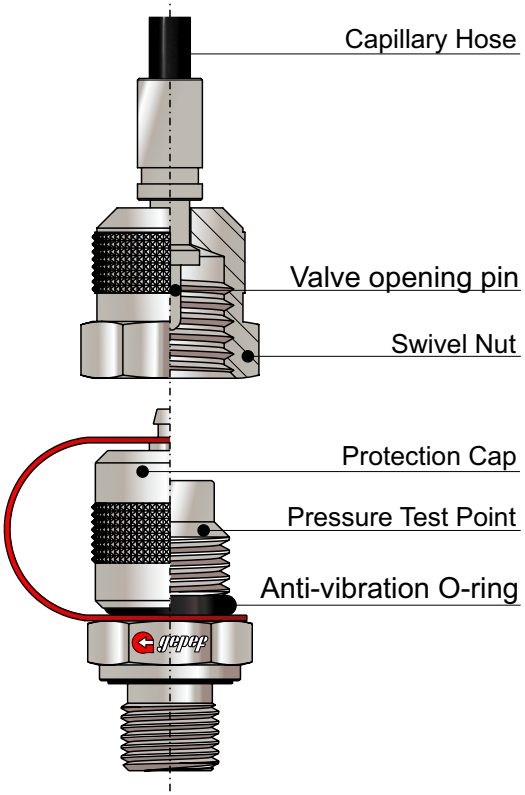

Applications
Pressure Measurement
Circuits Bleeding
Sample collection

Interchangeability
ISO 15171-2

Valve Sealing
Piston (standard) or Ball

Materials
Carbon Steel
Stainless Steel AISI 316

Working Pressure
Up to 630 bar / 9137 PSI
Up to 400 bar / 5801 PSI – Connection under pressure

Surface Treatment
White Trivalent (Cr VI Free)
Zinc - Nickel
Olive Green

Seals and Operating Temperatures
NBR / Buna-N: -25°C to 100°C (-13°F to +212°F) – Standard
FKM (Viton): -15°C to 200°C (-5°F to +392°F) – V
EPDM: -40°C to 150°C (-40°F to +302°F) – E

Fluids
Hydraulic oils and other mineral-based fluids
Check chemical compatibility table for seals
Gases – consult

Pressure Test Point with Male Thread

TPRM



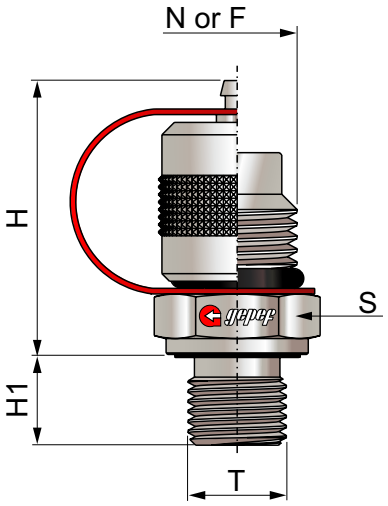

N or F Thread
N - M16x2
F - M16x1,5

Thread T	H	H1	S	Working Pressure	Sealing Type	Weight / kg
TPRM M8x1	37	8	17	250 bar / 3625 PSI	OR	0,07
TPRM M10x1	37	8	17	400 bar / 5801 PSI	OR	0,07
TPRM M10x1	37	8	17	400 bar / 5801 PSI	O / WD	0,07
TPRM M12x1,5	37	10	17	630 bar / 9137 PSI	O / WD	0,07
TPRM M14x1,5	38	12	19	630 bar / 9137 PSI	O / WD	0,08
TPRM M16x1,5	36	12	22	630 bar / 9137 PSI	O / WD	0,11
TPRM G1/8 BSP	35	8	17	400 bar / 5801 PSI	WD	0,07
TPRM G1/4 BSP	37	12	19	630 bar / 9137 PSI	WD	0,08
TPRM G3/8 BSP	37	12	22	630 bar / 9137 PSI	WD	0,10
TPRM G1/2 BSP	38	14	27	630 bar / 9137 PSI	WD	0,13
TPRM G3/4 BSP	38	16	32	630 bar / 9137 PSI	WD	0,18
TPRM R1/8 BSPT	34	8	17	400 bar / 5801 PSI	C	0,07
TPRM R1/4 BSPT	34	12	17	630 bar / 9137 PSI	C	0,08
TPRM 1/8 NPT	34	10	17	400 bar / 5801 PSI	C	0,07
TPRM 1/4 NPT	34	15	17	630 bar / 9137 PSI	C	0,08
TPRM 3/8 NPT	34	15	19	630 bar / 9137 PSI	C	0,09
TPRM 1/2 NPT	34	20	22	630 bar / 9137 PSI	C	0,12
TPRM 3/4 NPT	34	20	27	630 bar / 9137 PSI	C	0,16
TPRM 5/16-24 UNF	37	8	17	400 bar / 5801 PSI	O	0,07
TPRM 7/16-20 UNF	37	9,5	17	630 bar / 9137 PSI	O	0,07
TPRM 1/2-20 UNF	38	9,5	17	630 bar / 9137 PSI	O	0,08
TPRM 9/16-18 UNF	39	10	19	630 bar / 9137 PSI	O	0,08
TPRM 3/4-16 UNF	39	11,5	22	630 bar / 9137 PSI	O	0,10

O Type	C Type	WD Type
ISO 6149-2 / -3 Metric Thread	DIN 3852-2 - BSPT Thread	ISO 1179-2 - BSP Thread
ISO 11926-2 / -3 UNF Thread	ANSI / ASME B1.20.1-1983 - NPT Thread	ISO 9974-2 - Metric Thread

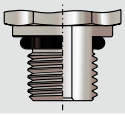

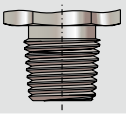

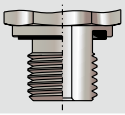

Coding example:

N-TPRM 1/4 BSP WD (Pressure Test Point M16x2 with male thread G 1/4 BSP, sealing type WD)

For AISI 316 stainless steel, add the letter I at the end of the code.

For Viton (FKM) or EPDM seals, add the letter V or E at the end of the code.

If another type of pressure tap not listed in this catalog is required, please contact our technical department.

Pressure Test Point DKO 24° DIN 3865 — TPBO



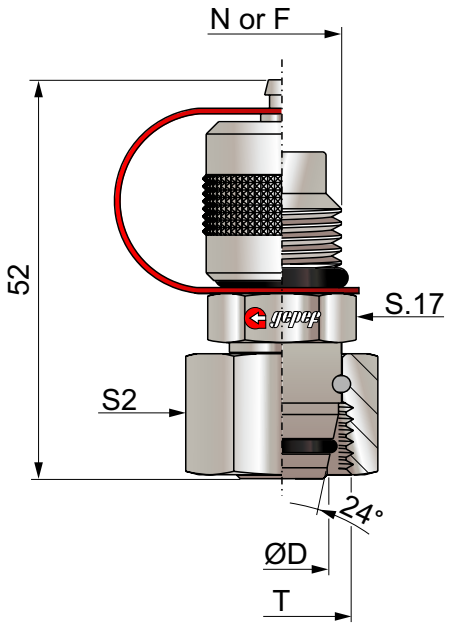

N or F Thread
N - M16x2
F - M16x1,5

Series L

Type	D	T	S2	Working Pressure	Weight / kg
TPBO 6L	6	M12x1,5	17	315 bar / 4568 PSI	0,09
TPBO 8L	8	M14x1,5	17	315 bar / 4568 PSI	0,09
TPBO 10L	10	M16x1,5	19	315 bar / 4568 PSI	0,10
TPBO 12L	12	M18x1,5	22	315 bar / 4568 PSI	0,11
TPBO 15L	15	M22x1,5	27	315 bar / 4568 PSI	0,16

Series S

Type	D	T	S2	Working Pressure	Weight / kg
TPBO 6S	6	M14x1,5	17	630 bar / 9137 PSI	0,09
TPBO 8S	8	M16x1,5	19	630 bar / 9137 PSI	0,10
TPBO 10S	10	M18x1,5	22	630 bar / 9137 PSI	0,11
TPBO 12S	12	M20x1,5	24	630 bar / 9137 PSI	0,12
TPBO 14S	14	M22x1,5	27	630 bar / 9137 PSI	0,16

Coding example:

N-TPBO 10S (Pressure Test Point M16x2 with thread M18x1.5, for tube Ø10, Series S)

For AISI 316 stainless steel, add the letter I at the end of the code.

For Viton (FKM) or EPDM seals, add the letter V or E at the end of the code.

If another type of pressure tap not listed in this catalog is required, please contact our technical department.

Pressure Test Point DKO 24° DIN 3865

TPBO



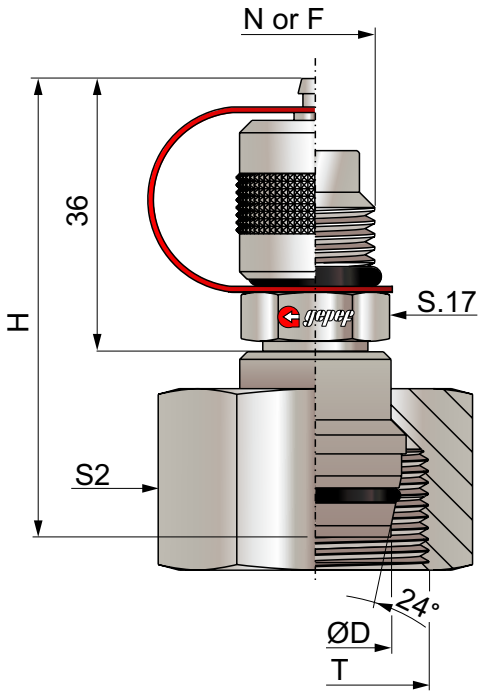

N or F Thread
N - M16x2
F - M16x1,5

Series L

Type	D	T	S2	H	Working Pressure	Weight / kg
TPBO 18L	18	M26x1,5	32	58	315 bar / 4568 PSI	0,19
TPBO 22L	22	M30x2	36	58	160 bar / 2320 PSI	0,22
TPBO 28L	28	M36x2	41	60	160 bar / 2320 PSI	0,30
TPBO 35L	35	M45x2	50	63	160 bar / 2320 PSI	0,47
TPBO 42L	42	M52x2	60	64	160 bar / 2320 PSI	0,64

Series S

Type	D	T	S2	H	Working Pressure	Weight / kg
TPBO 16S	16	M24x1,5	30	56	400 bar / 5801 PSI	0,17
TPBO 20S	20	M30x2	36	61	400 bar / 5801 PSI	0,23
TPBO 25S	25	M36x2	46	63	400 bar / 5801 PSI	0,37
TPBO 30S	30	M42x2	50	65	400 bar / 5801 PSI	0,43
TPBO 38S	38	M52x2	60	68	315 bar / 4568 PSI	0,72

Coding example:

N-TPBO 18L (Pressure Test Point M16x2 with thread M26x1.5, for tube Ø18, Series L)

For AISI 316 stainless steel, add the letter I at the end of the code.

For Viton (FKM) or EPDM seals, add the letter V or E at the end of the code.

If another type of pressure tap not listed in this catalog is required, please contact our technical department.

Double Connection Pressure Test Point
DIN 2353 / ISO 8434-1

TPCD



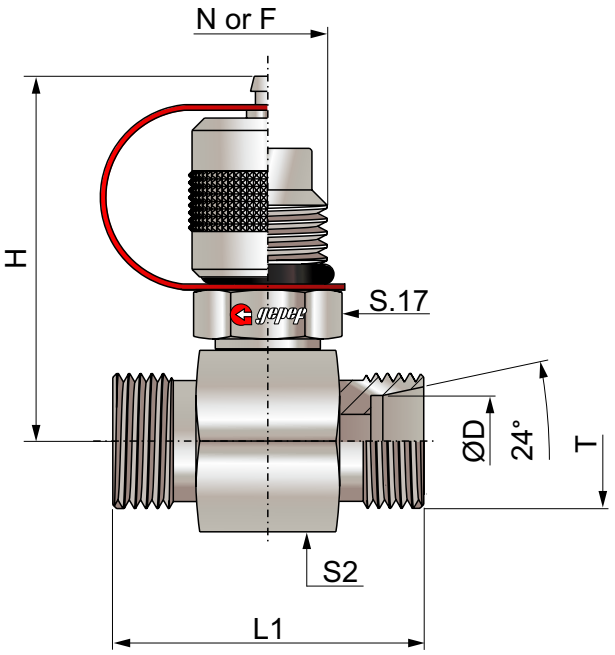

N or F Thread
N - M16x2
F - M16x1,5

Series L

Type	D	T	S2	H	L1	Working Pressure	Weight / kg
TPCD 6L	6	M12x1,5	24	46	37	315 bar / 4568 PSI	0,14
TPCD 8L	8	M14x1,5	24	46	37	315 bar / 4568 PSI	0,14
TPCD 10L	10	M16x1,5	24	46	39	315 bar / 4568 PSI	0,14
TPCD 12L	12	M18x1,5	24	46	39	315 bar / 4568 PSI	0,14
TPCD 15L	15	M22x1,5	30	49	41	315 bar / 4568 PSI	0,19
TPCD 18L	18	M26x1,5	30	49	41	315 bar / 4568 PSI	0,20
TPCD 22L	22	M30x2	32	50	45	160 bar / 2320 PSI	0,20
TPCD 28L	28	M36x2	41	55	45	160 bar / 2320 PSI	0,35
TPCD 35L	35	M45x2	46	57	49	160 bar / 2320 PSI	0,35
TPCD 42L	42	M52x2	55	62	49	160 bar / 2320 PSI	0,46

Series S

Type	D	T	S2	H	L1	Working Pressure	Weight / kg
TPCD 6S	6	M14x1,5	24	46	41	630 bar / 9137 PSI	0,14
TPCD 8S	8	M16x1,5	24	46	41	630 bar / 9137 PSI	0,14
TPCD 10S	10	M18x1,5	24	46	41	630 bar / 9137 PSI	0,14
TPCD 12S	12	M20x1,5	24	46	41	630 bar / 9137 PSI	0,16
TPCD 14S	14	M22x1,5	27	48	45	630 bar / 9137 PSI	0,18
TPCD 16S	16	M24x1,5	30	49	45	400 bar / 5801 PSI	0,22
TPCD 20S	20	M30x2	32	50	49	400 bar / 5801 PSI	0,24
TPCD 25S	25	M36x2	41	55	53	400 bar / 5801 PSI	0,35
TPCD 30S	30	M42x2	46	57	57	400 bar / 5801 PSI	0,36
TPCD 38S	38	M52x2	55	62	61	315 bar / 4568 PSI	0,36

Coding example:

N-TPCD 22L (Pressure Test Point M16x2 double connection, for tube Ø22, Series L)

For AISI 316 stainless steel, add the letter I at the end of the code.

For Viton (FKM) or EPDM seals, add the letter V or E at the end of the code.

If another type of pressure tap not listed in this catalog is required, please contact our technical department.

Double Connection Pressure Test Point
DIN 2353 / ISO 8434-1 - Male / Female

TPCD-M/F



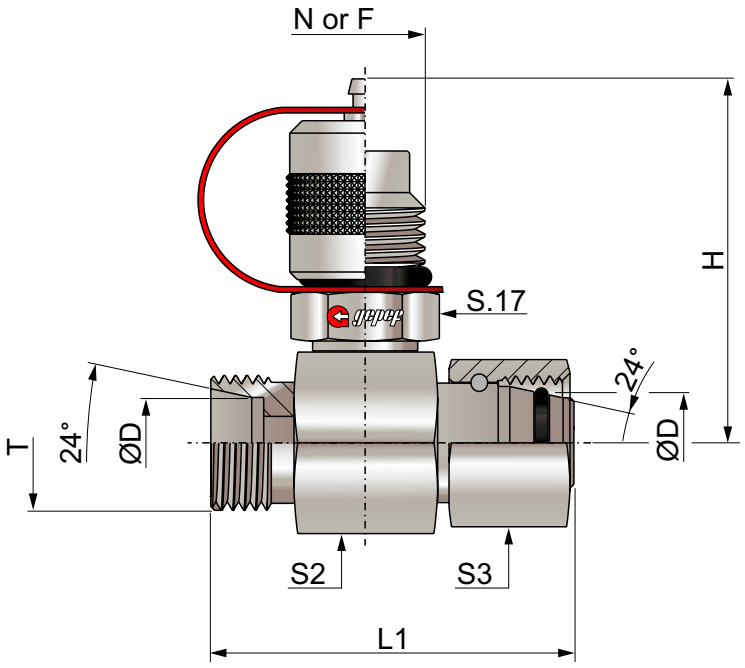

N or F Thread
N - M16x2
F - M16x1,5

Series L

Type	D	T	S2	S3	H	L1	Working Pressure
TPCD 6L M/F	6	M12x1,5	24	17	46	45	315 bar / 4568 PSI
TPCD 8L M/F	8	M14x1,5	24	17	46	45	315 bar / 4568 PSI
TPCD 10L M/F	10	M16x1,5	24	19	46	46	315 bar / 4568 PSI
TPCD 12L M/F	12	M18x1,5	24	22	46	46	315 bar / 4568 PSI
TPCD 15L M/F	15	M22x1,5	30	27	49	47	315 bar / 4568 PSI
TPCD 18L M/F	18	M26x1,5	32	32	50	48	315 bar / 4568 PSI
TPCD 22L M/F	22	M30x2	36	36	52	54	160 bar / 2320 PSI
TPCD 28L M/F	28	M36x2	41	41	55	53	160 bar / 2320 PSI
TPCD 35L M/F	35	M45x2	46	50	57	68	160 bar / 2320 PSI
TPCD 42L M/F	42	M52x2	55	60	62	68	160 bar / 2320 PSI

Series S

Type	D	T	S2	S3	H	L1	Working Pressure
TPCD 6S M/F	6	M14x1,5	24	17	46	47	630 bar / 9137 PSI
TPCD 8S M/F	8	M16x1,5	24	19	46	47	630 bar / 9137 PSI
TPCD 10S M/F	10	M18x1,5	24	22	46	47	630 bar / 9137 PSI
TPCD 12S M/F	12	M20x1,5	24	24	46	47	630 bar / 9137 PSI
TPCD 14S M/F	14	M22x1,5	27	27	48	51	630 bar / 9137 PSI
TPCD 16S M/F	16	M24x1,5	30	30	49	50	400 bar / 5801 PSI
TPCD 20S M/F	20	M30x2	36	36	52	52	400 bar / 5801 PSI
TPCD 25S M/F	25	M36x2	41	46	55	63	400 bar / 5801 PSI
TPCD 30S M/F	30	M42x2	46	50	57	70	400 bar / 5801 PSI
TPCD 38S M/F	38	M52x2	55	60	62	74	315 bar / 4568 PSI

Coding example:

N-TPCD 22L M/F (Pressure Test Point M16x2 double connection male/female, for tube Ø22, Series L)

For AISI 316 stainless steel, add the letter I at the end of the code.

For Viton (FKM) or EPDM seals, add the letter V or E at the end of the code.

If another type of pressure tap not listed in this catalog is required, please contact our technical department.

Plain End Pressure Test Point for Assembly with Nut and Ring DIN 2353 / ISO 8434-1

TPPL



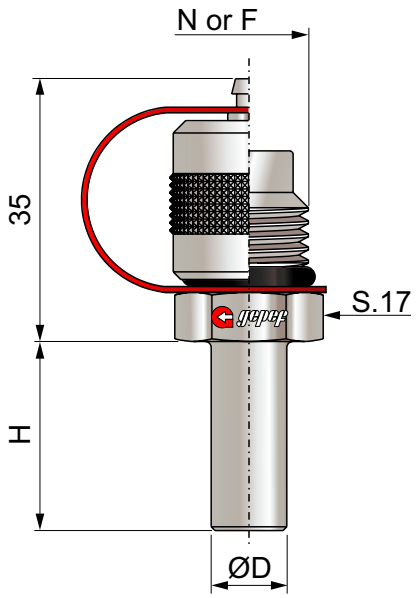

N or F Thread	Type	D	H
N - M16x2	TPPL 4	4	20
F - M16x1,5	TPPL 6	6	20
	TPPL 8	8	20
	TPPL 10	10	22
	TPPL 12	12	22
	TPPL 14	14	22
	TPPL 15	15	25
	TPPL 16	16	28

Coding example:
N-TPPL 10 (Pressure Test Point M16x2 with plain end Ø10)
For AISI 316 stainless steel, add the letter I at the end of the code.
For Viton (FKM) or EPDM seals, add the letter V or E at the end of the code.
If another type of pressure tap not listed in this catalog is required, please contact our technical department.

Pressure Test Point for JIC 37° Connection

TPBJ



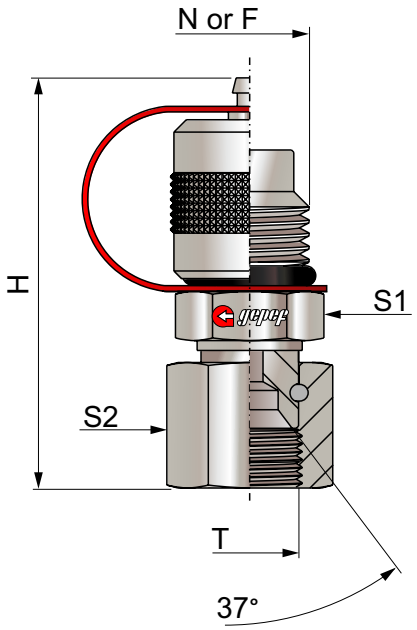

N or F Thread	Thread T	Size	Pipe	S1	S2	H
N - M16x2	TPBJ 7/16-20 UNF	-4	1/4	19	19	54
F - M16x1,5	TPBJ 1/2-20 UNF	-5	5/16	19	19	55
	TPBJ 9/16-18 UNF	-6	3/8	19	19	57
	TPBJ 3/4-16 UNF	-8	1/2	22	19	59
	TPBJ 7/8-14 UNF	-10	5/8	22	27	60
	TPBJ 1.1/16-12 UN	-12	3/4	17	32	70
	TPBJ 1.3/16-12 UN	-14	7/8	17	32	70
	TPBJ 1.5/16-12 UN	-16	1	17	41	72
	TPBJ 1.5/8-12 UN	-20	1.1/4	17	50	72
	TPBJ 1.7/8-12 UN	-24	1.1/2	17	60	79

Coding example:

N-TPBJ 1/2-20 UNF (Pressure Test Point M16x2 with 1/2-20 UNF thread, JIC 37° sealing, for tube Ø5/16)

For AISI 316 stainless steel, add the letter I at the end of the code.

For Viton (FKM) or EPDM seals, add the letter V or E at the end of the code.

If another type of pressure tap not listed in this catalog is required, please contact our technical department.

Double Connection Pressure Test Point
JIC 37° SAE J514 / ISO 8434-2

TPCD JIC



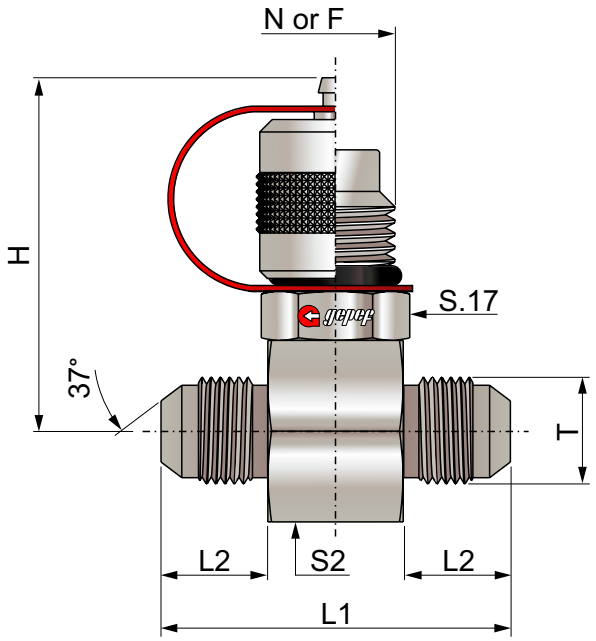

N or F Thread
N - M16x2
F - M16x1,5

Thread T	Size	Pipe	S2	L1	L2	H
TPCD JIC 7/16-20 UNF	-4	1/4	24	45	14	46
TPCD JIC 1/2-20 UNF	-5	5/16	24	45	14	46
TPCD JIC 9/16-18 UNF	-6	3/8	24	45	14	46
TPCD JIC 3/4-16 UNF	-8	1/2	30	50	16,5	49
TPCD JIC 7/8-14 UNF	-10	5/8	30	56	19,5	49
TPCD JIC 1.1/16-12 UN	-12	3/4	36	61	22	52
TPCD JIC 1.3/16-12 UN	-14	7/8	36	63	23	52
TPCD JIC 1.5/16-12 UN	-16	1’	41	63	23	55
TPCD JIC 1.5/8-12 UN	-20	1.1/4	46	66	24,5	57
TPCD JIC 1.7/8-12 UN	-24	1.1/2	55	72	27,5	62

Coding example:

N-TPCD JIC 1/2-20 UNF (Pressure Test Point M16x2 for double JIC 37° connection, thread 1/2-20 UNF, for tube Ø5/16)

For AISI 316 stainless steel, add the letter I at the end of the code.

For Viton (FKM) or EPDM seals, add the letter V or E at the end of the code.

If another type of pressure tap not listed in this catalog is required, please contact our technical department.

Pressure Test Point for Double Connection JIC 37° Male / Female — SAE J514 / ISO 8434-2

TPCD JIC M/F



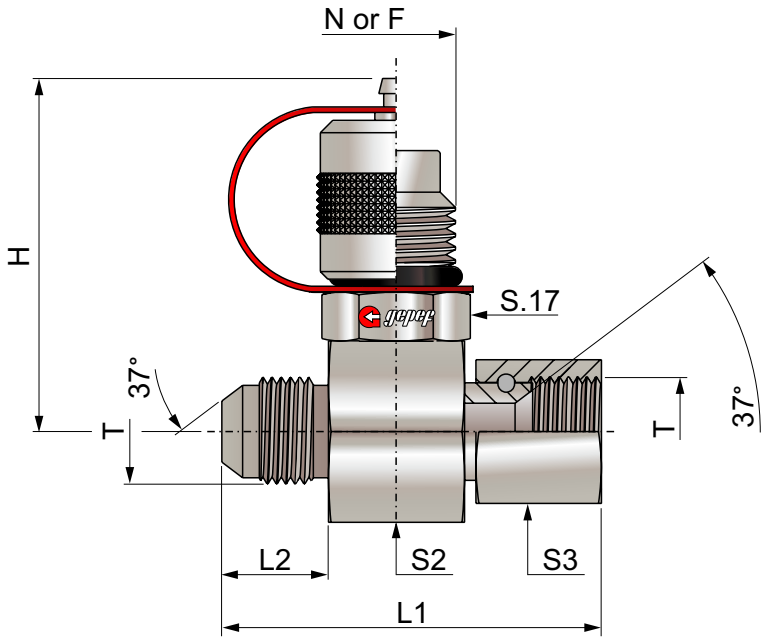

N or F Thread
N - M16x2
F - M16x1,5

Thread T	Size	Pipe	S2	S3	L1	L2	H
TPCD JIC M/F 7/16-20 UNF	-4	1/4	24	19	48	14	46
TPCD JIC M/F 1/2-20 UNF	-5	5/16	24	19	51	14	46
TPCD JIC M/F 9/16-18 UNF	-6	3/8	24	19	52	14	46
TPCD JIC M/F 3/4-16 UNF	-8	1/2	27	22	57,5	16,5	49
TPCD JIC M/F 7/8-14 UNF	-10	5/8	30	27	63,5	19,5	49
TPCD JIC M/F 1.1/16-12 UN	-12	3/4	32	32	71	22	52
TPCD JIC M/F 1.3/16-12 UN	-14	7/8	32	36	72	23	52
TPCD JIC M/F 1.5/16-12 UN	-16	1	41	41	73	23	55
TPCD JIC M/F 1.5/8-12 UN	-20	1.1/4	46	50	77,5	24,5	57
TPCD JIC M/F 1.7/8-12 UN	-24	1.1/2	55	60	87,5	27,5	62

Coding example:

N-TPCD JIC M/F 1/2-20 UNF (Pressure Test Point M16x2 for double JIC 37° male/female connection, 1/2-20 UNF thread, for tube Ø5/16)

For AISI 316 stainless steel, add the letter I at the end of the code.

For Viton (FKM) or EPDM seals, add the letter V or E at the end of the code.

If another type of pressure tap not listed in this catalog is required, please contact our technical department.

Pressure Test Point for ORFS Connection
SAE 1453 / ISO 8434-3

TPRF - ORFS



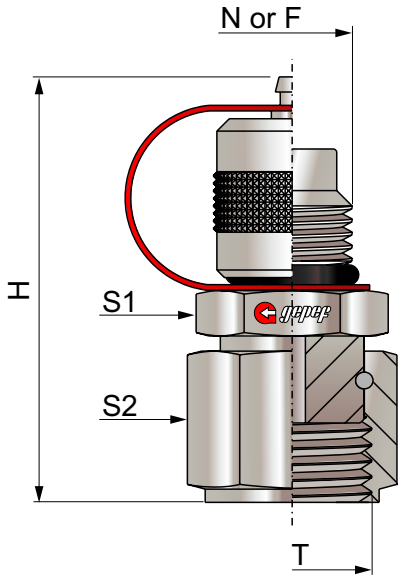

N or F Thread	Thread T	Size	Pipe	S1	S2	H
N - M16x2	TPRF 9/16-18 UNF - ORFS	-4	1/4	17	19	54
F - M16x1,5	TPRF 11/16-16 UN - ORFS	-6	5/16	19	22	54
	TPRF 13/16-16 UN - ORFS	-8	1/2	22	24	54
	TPRF 1-14 UNS - ORFS	-10	5/8	17	30	64,5
	TPRF 1.3/16-12 UN - ORFS	-12	3/4	17	36	65,6
	TPRF 1.7/16-12 UN - ORFS	-16	1	17	41	65,5
	TPRF 1.11/16-12 UN - ORFS	-20	1.1/4	17	50	65,5
	TPRF 2-12 UN - ORFS	-24	1.1/2	17	60	65,5

Coding example:

N-TPRF 11/16-16 UN - ORFS (Pressure Test Point M16x2 with female 11/16-16 UN ORFS thread)

For AISI 316 stainless steel, add the letter I at the end of the code.

For Viton (FKM) or EPDM seals, add the letter V or E at the end of the code.

If another type of pressure tap not listed in this catalog is required, please contact our technical department.

Pressure Test Point for Double Connection ORFS Male / Female - SAE 1453 / ISO 8434-3

TPCD ORFS M/F



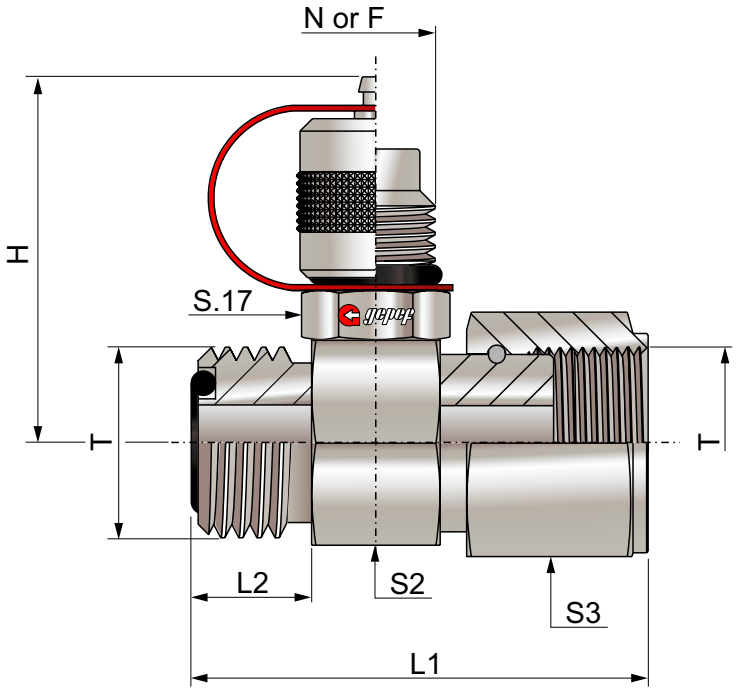

N or F Thread
N - M16x2
F - M16x1,5

Thread T	Size	Pipe	S2	S3	L1	L2	H
TPCD ORFS M/F 9/16-18 UNF	-4	1/4	24	19	49	10	46
TPCD ORFS M/F 11/16-16 UN	-6	5/16	24	22	52	11	46
TPCD ORFS M/F 13/16-16 UN	-8	1/2	24	24	57	13	46
TPCD ORFS M/F 1-14 UNS	-10	5/8	30	30	64	15,5	49
TPCD ORFS M/F 1.3/16-12 UN	-12	3/4	36	36	68	17	52
TPCD ORFS M/F 1.7/16-12 UN	-16	1	41	41	69	17,5	55
TPCD ORFS M/F 1.11/16-12 UN	-20	1.1/4	50	50	69	17,5	59
TPCD ORFS M/F 2-12 UN	-24	1.1/2	60	60	69	17,5	64

Coding example:

N-TPCD ORFS M/F 9/16-18 UNF (Pressure Test Point M16x2 with 9/16-18 UNF thread)

For AISI 316 stainless steel, add the letter I at the end of the code.

For Viton (FKM) or EPDM seals, add the letter V or E at the end of the code.

If another type of pressure tap not listed in this catalog is required, please contact our technical department.

Single Panel Pressure Test Point
ORFS / JIC 37° / DIN 2353

TPPS

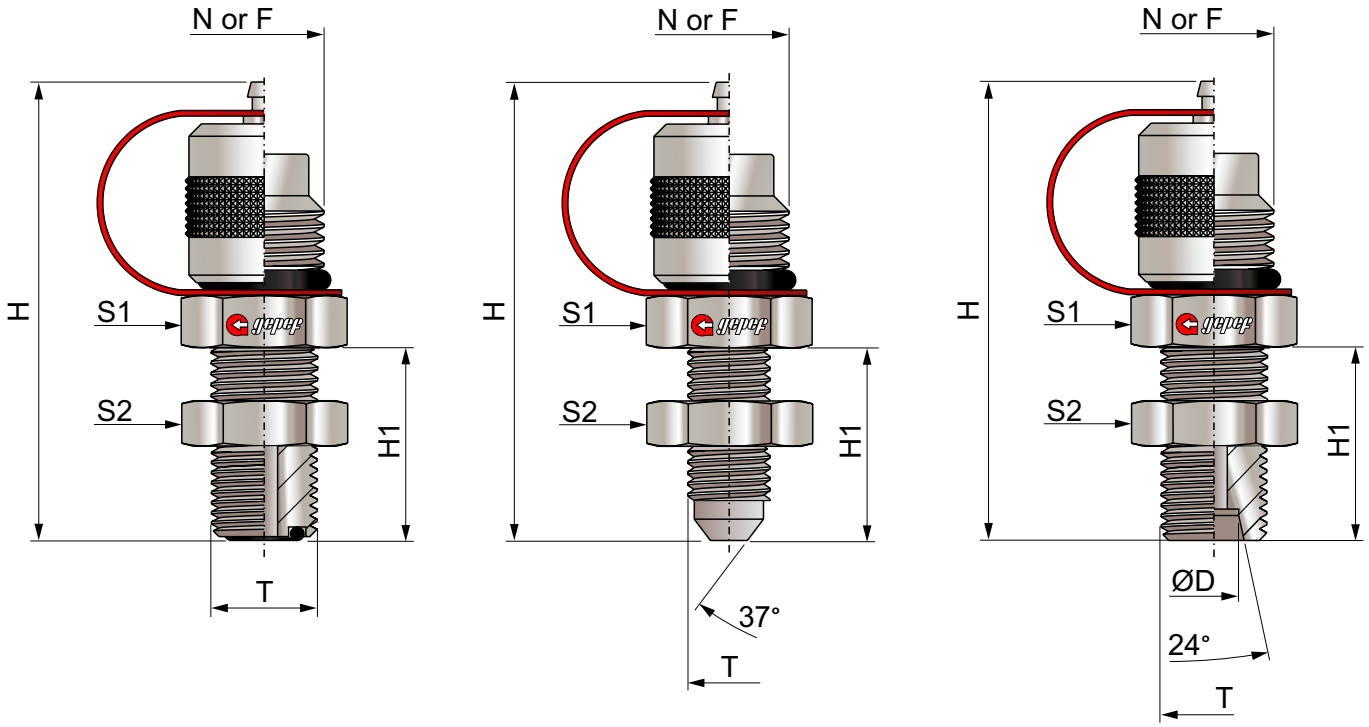

ORFS		JIC37°			DIN 2353		
N or F Thread	**Thread T**	**D**	**S1**	**S2**	**H**	**H1**	**Forma**
N - M16x2	TPPS 9/16-18 UNF - ORFS	1/4	19	19	60	25	ORFS
F - M16x1,5	TPPS 11/16-16 UN - ORFS	5/16	22	27	70	36	ORFS
	TPPS 7/16-20 UNF - JIC	1/4	17	17	60	25	JIC 37°
	TPPS M12x1,5-6L	6	17	17	69	34	DIN 2353
	TPPS M14x1,5-8L	8	19	19	69	34	DIN 2353
	TPPS M16X1,5-10L	10	22	22	70	34	DIN 2353
	TPPS M14x1,5-6S	6	19	19	71	36	DIN 2353
	TPPS M16x1,5-8S	8	19	19	71	36	DIN 2353
	TPPS M18x1,5-10S	10	24	24	72	37	DIN 2353

Coding example:

N-TPPS 9/16-18 UNF-ORFS (Pressure Test Point M16x2 with 9/16-18 UNF-ORFS male thread for panels.)

For AISI 316 stainless steel, add the letter I at the end of the code.

For Viton (FKM) or EPDM seals, add the letter V or E at the end of the code.

If another type of pressure tap not listed in this catalog is required, please contact our technical department.

Double Panel Pressure Test Point

TPPD



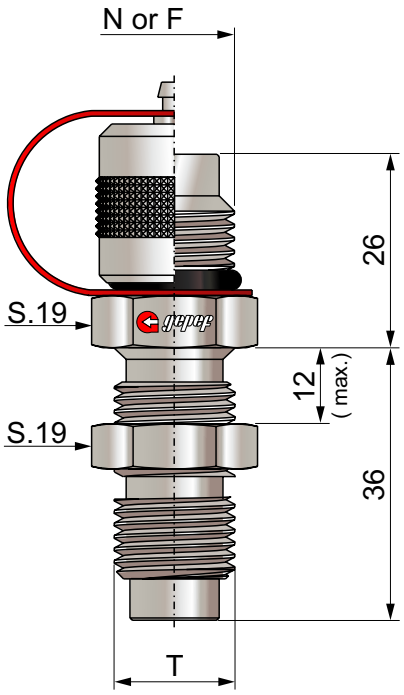

Thread T	N	F	T	Working Pressure
N - TPPD M16x2	M16x2		M16x2	630 bar / 9137 PSI
N - TPPD M16x1,5	M16x2		M16x1,5	630 bar / 9137 PSI
F - TPPD M16x2		M16x1,5	M16x2	630 bar / 9137 PSI
F - TPPD M16x1,5		M16x1,5	M16x1,5	630 bar / 9137 PSI

Coding example:

N-TPPD M16x2 (Pressure Test Point M16x2 with male M16x2 thread for panels.)

For AISI 316 stainless steel, add the letter I at the end of the code.

For Viton (FKM) or EPDM seals, add the letter V or E at the end of the code.

If another type of pressure tap not listed in this catalog is required, please contact our technical department.

Pressure Test Point with Female Thread

TPRF



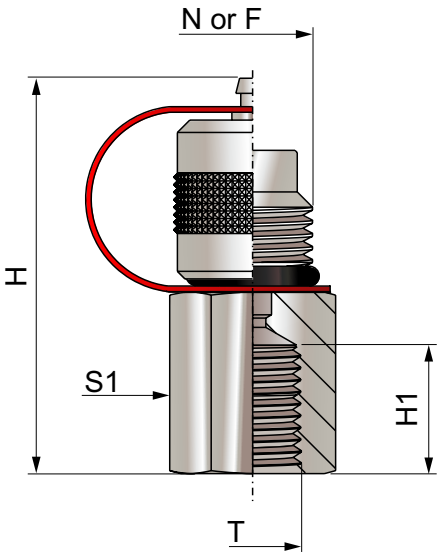

N or F Thread	Thread T	S1	H	H1	Working Pressure
N - M16x2	TPRF 1/8 NPT	19	52	9	400 bar / 5801 PSI
F - M16x1,5	TPRF 1/4 NPT	19	52	14	630 bar / 9137 PSI
	TPRF 1/2 NPT	27	56	16,5	630 bar / 9137 PSI
	TPRF G1/8 BSP	19	52	9	400 bar / 5801 PSI
	TPRF G1/4 BSP	19	52	14	630 bar / 9137 PSI
	TPRF G1/2 BSP	27	56	16,5	630 bar / 9137 PSI

Coding example:

N-TPRF 1/8 NPT (Pressure Test Point M16x2 with female 1/8 NPT thread.)

For AISI 316 stainless steel, add the letter I at the end of the code.

For Viton (FKM) or EPDM seals, add the letter V or E at the end of the code.

If another type of pressure tap not listed in this catalog is required, please contact our technical department.

Female Panel Pressure Test Point

TPPF



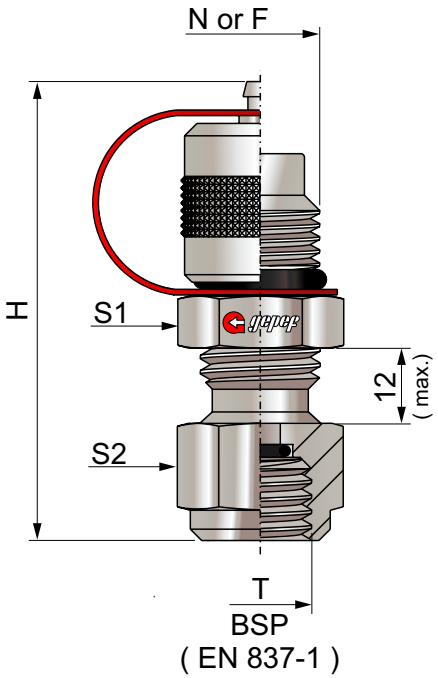

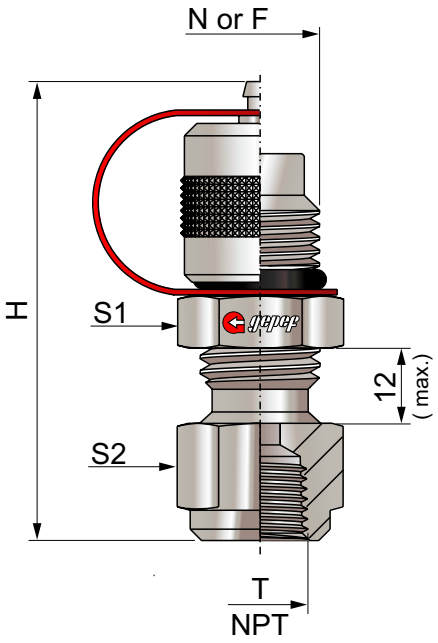

N or F Thread	Thread T	S1	S2	H	Working Pressure
N - M16x2	TPPF G1/4 BSP	19	19	63	630 bar / 9137 PSI
F - M16x1,5	TPPF G1/2 BSP	19	27	70	630 bar / 9137 PSI
	TPPF 1/4 NPT	19	19	64	630 bar / 9137 PSI
	TPPF 1/2 NPT	19	27	70	630 bar / 9137 PSI

Coding example:

N-TPPF G1/4 BSP (Pressure Test Point M16x2 with female G1/4 BSP thread for panels.)

For AISI 316 stainless steel, add the letter I at the end of the code.

For Viton (FKM) or EPDM seals, add the letter V or E at the end of the code.

If another type of pressure tap not listed in this catalog is required, please contact our technical department.

90° Angled Pressure Test Point with Male Thread

TPAG



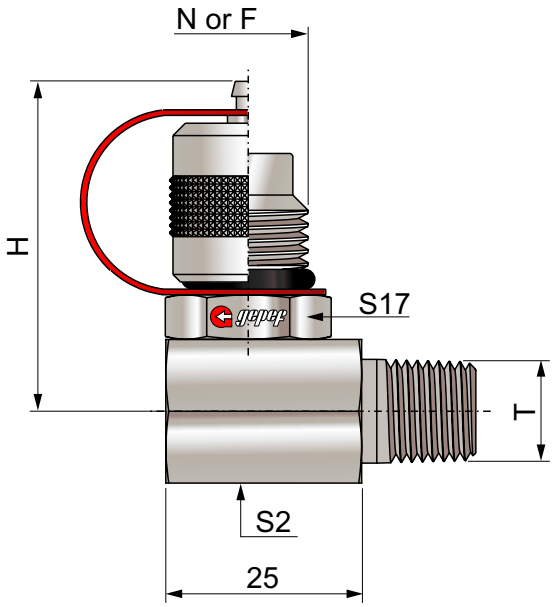

N or F Thread
N - M16x2
F - M16x1,5

Thread T	S2	H	Working Pressure
TPAG 1/8 NPT	19	50	400 bar / 5801 PSI
TPAG 1/4 NPT	19	50	400 bar / 5801 PSI
TPAG 3/8 NPT	19	50	400 bar / 5801 PSI

Coding example:

N-TPAG 1/8 NPT (Angled Pressure Test Point M16x2 with male 1/8 NPT thread.)

For AISI 316 stainless steel, add the letter I at the end of the code.

For Viton (FKM) or EPDM seals, add the letter V or E at the end of the code.

If another type of pressure tap not listed in this catalog is required, please contact our technical department.

90° Angled Pressure Test Point with Male / Female Thread

TPAL



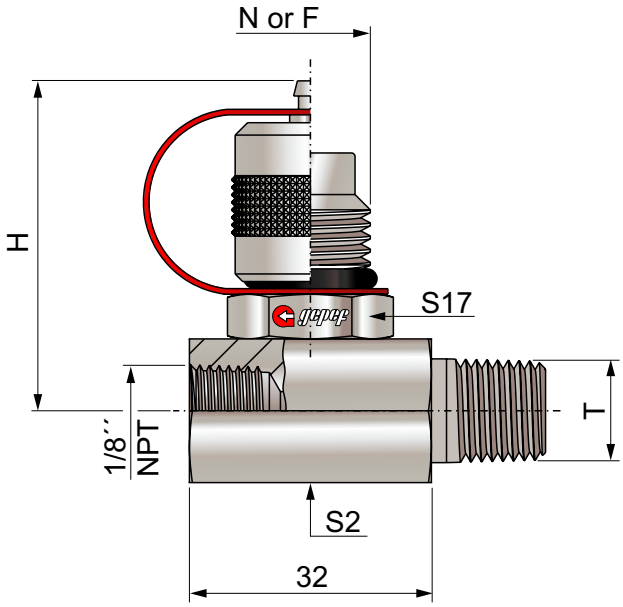

N or F Thread
N - M16x2
F - M16x1,5

Thread T	S2	H	Working Pressure
TPAL 1/8 NPT	19	50	400 bar / 5801 PSI
TPAL 1/4 NPT	19	50	400 bar / 5801 PSI
TPAL 3/8 NPT	19	50	400 bar / 5801 PSI

Coding example:

N-TPAL 1/8 NPT (Angled Pressure Test Point M16x2 with female 1/8 NPT thread and male 1/8 NPT thread.)

For AISI 316 stainless steel, add the letter I at the end of the code.

For Viton (FKM) or EPDM seals, add the letter V or E at the end of the code.

If another type of pressure tap not listed in this catalog is required, please contact our technical department.

Pressure Test Point BSF Thread

TPRI



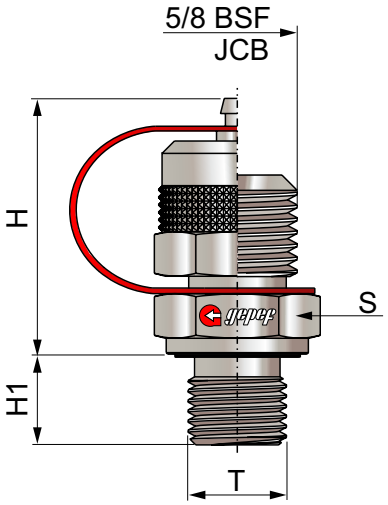

Thread
5/8 BSF - JCB

Thread T	H	H1	S	Working Pressure	Sealing Type
TPRI G1/8 BSP	34	8	17	400 bar / 5801 PSI	WD
TPRI G1/4 BSP	34	12	19	400 bar / 5801 PSI	WD
TPRI 7/16 UNF	34	9,5	17	400 bar / 5801 PSI	O

O Type	C Type	WD Type
ISO 6149-2 / -3 Metric Thread	DIN 3852-2 - BSPT Thread	ISO 1179-2 - BSP Thread
ISO 11926-2 / -3 UNF Thread	ANSI / ASME B1.20.1-1983 - NPT Thread	ISO 9974-2 - Metric Thread
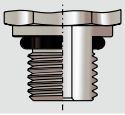	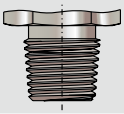	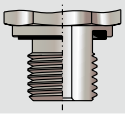

Coding example:

TPRI G1/8 BSP WD (Pressure Test Point 5/8 BSF-JCB with male G1/8 BSP thread, WD sealing type.)

For AISI 316 stainless steel, add the letter I at the end of the code.

For Viton (FKM) or EPDM seals, add the letter V or E at the end of the code.

If another type of pressure tap not listed in this catalog is required, please contact our technical department.

Snap-in System Pressure Test Point

TPSE



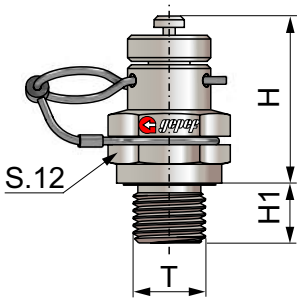

Thread T	H	H1	Working Pressure	Sealing Type
TPSE M8 x 1	21	8	250 bar / 3625 PSI	O
TPSE M10 x 1	21	8	400 bar / 5801 PSI	O
TPSE 1/8 NPT	21	10	400 bar / 5801 PSI	C

O Type	C Type	WD Type
ISO 6149-2 / -3 Metric Thread	DIN 3852-2 - BSPT Thread	ISO 1179-2 - BSP Thread
ISO 11926-2 / -3 UNF Thread	ANSI / ASME B1.20.1-1983 - NPT Thread	ISO 9974-2 - Metric Thread
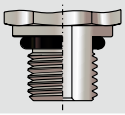	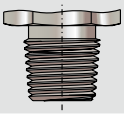	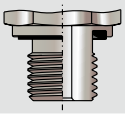

Coding example:

TPSE M8x1 WD (Snap-in System Pressure Test Point with male thread M8x1, sealing type WD).

For AISI 316 stainless steel, add the letter I at the end of the code.

For Viton (FKM) or EPDM seals, add the letter V or E at the end of the code.

If another type of pressure tap not listed in this catalog is required, please contact our technical department.

Pressure Test Point with Special Trapezoidal Thread S12.65 x 1.5

TPRE



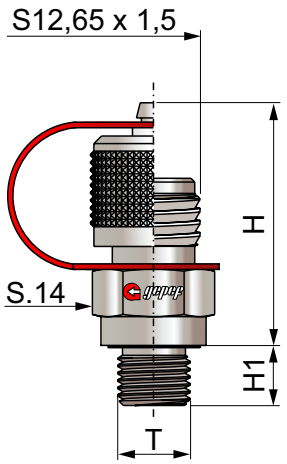

Thread
S12,65 x 1,5

Thread T	H	H1	Working Pressure	Sealing Type
TPRE G1/8 BSP	33	8	400 bar / 5801 PSI	WD
TPRE G1/4 BSP	33	12	630 bar / 9137 PSI	WD
TPRE 1/8 NPT	33	10	400 bar / 5801 PSI	C
TPRE 1/4 NPT	33	15	630 bar / 9137 PSI	C

O Type	C Type	WD Type
ISO 6149-2 / -3 Metric Thread	DIN 3852-2 - BSPT Thread	ISO 1179-2 - BSP Thread
ISO 11926-2 / -3 UNF Thread	ANSI / ASME B1.20.1-1983 - NPT Thread	ISO 9974-2 - Metric Thread
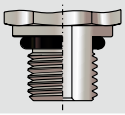	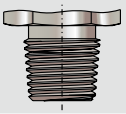	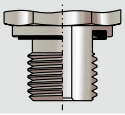

Coding example:

TPRE G1/8BSP WD (Pressure Test Point with special trapezoidal thread S12.65 x 1.5, male G1/8 BSP thread, WD sealing type.)

For AISI 316 stainless steel, add the letter I at the end of the code.

For Viton (FKM) or EPDM seals, add the letter V or E at the end of the code.

If another type of pressure tap not listed in this catalog is required, please contact our technical department.

DIAGNOSTIC AND MONITORING PANELS

Diagnostic panels allow circuit monitoring from a single location, making it possible to monitor pressure, temperature, circuit bleeding, and fluid sampling/collection.
With symbols previously defined at each point, it is possible to access all the equipment devices, which are interconnected through capillary hoses.Ideal for large equipment and hard-to-reach locations, it facilitates corrective and preventive maintenance diagnostics.

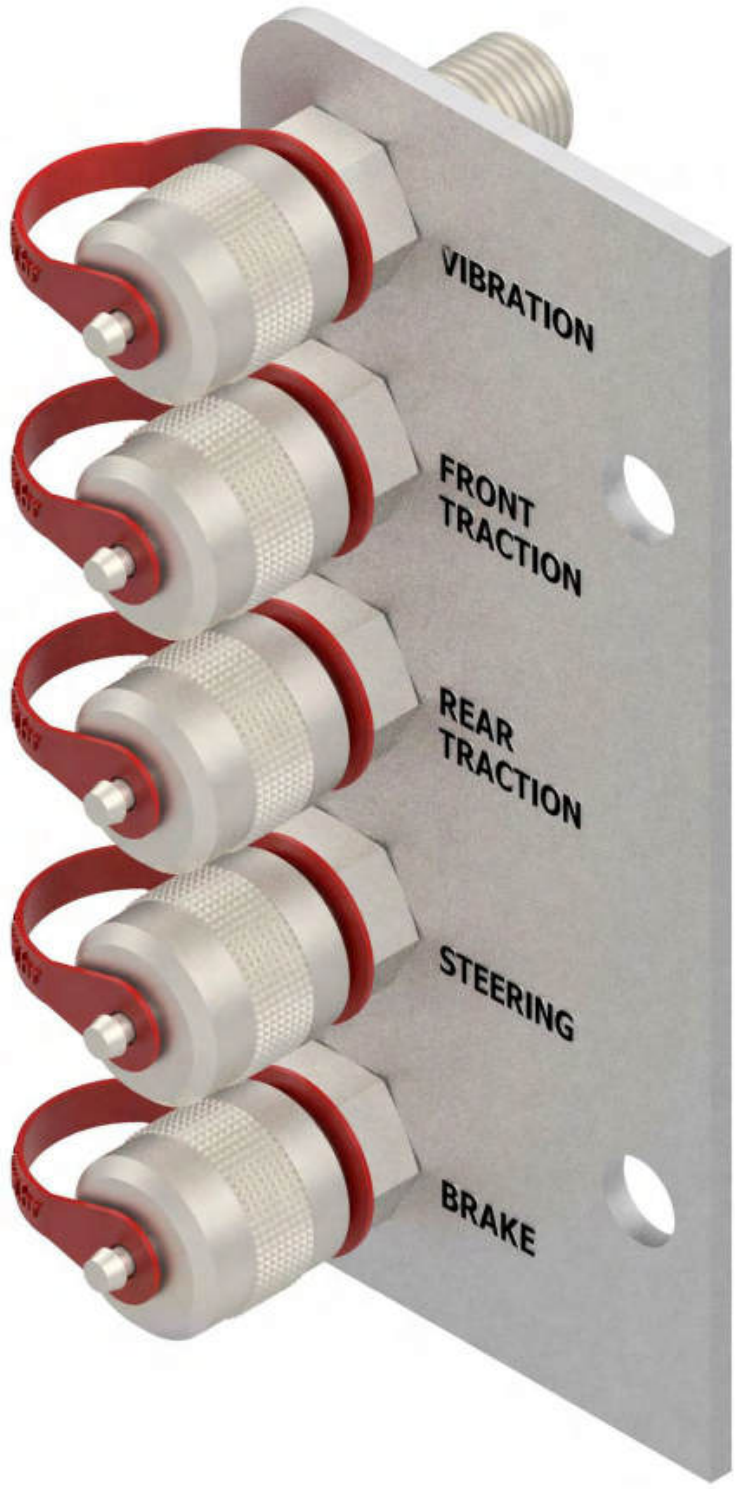



gepef

Flow Control Valve

FLOW CONTROL VALVE - NDV

Valve designed to control and shut off flow in both directions. Features a graduated handle and locking screw for handle fixation.



MHA ZENTGRAF
Flow Control Technology

Seals & Operating Temperatures
NBR (Buna-N): -25°C to 100°C (-13°F to 212°F) - (Standard)
FKM (Viton): -15°C to 200°C (5°F to 392°F) - V

Surface Treatment
White Zinc Plating (Hexavalent Chromium-Free)

Materials
Carbon Steel
Stainless Steel AISI 316

Nominal Pressure
AISI 306 bar

Flow control valves must be used together with a shut-off device.
Minor leakage may occur in the closed position. (DIN EN 12266-1 leakage test rate A-B - water test medium.)

Flow Control Valve — NDV



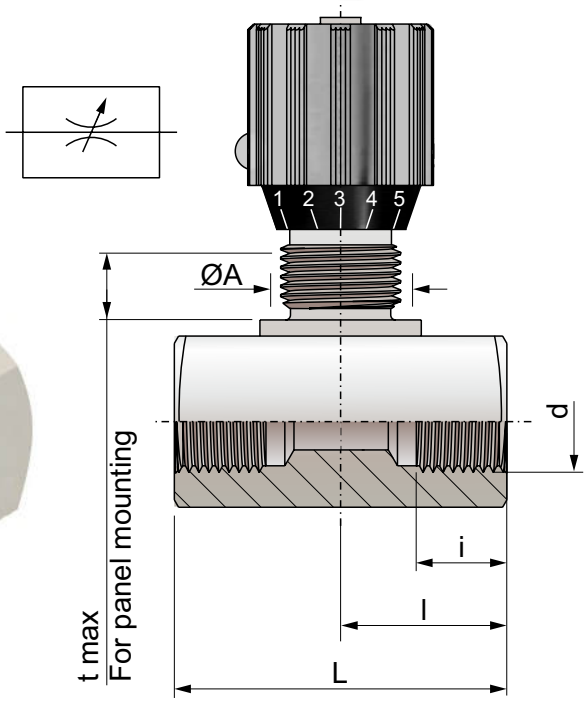

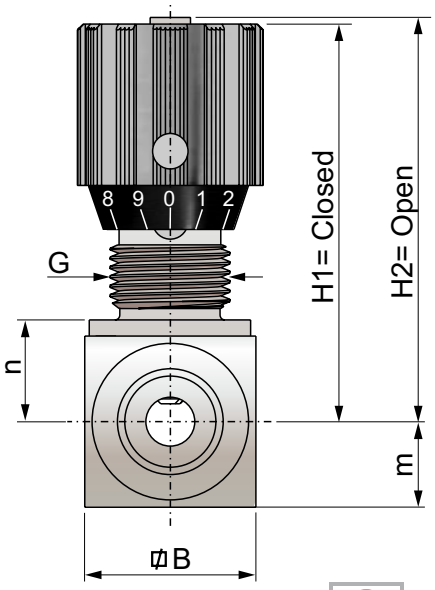

MHA ZENTGRAF
Flow Control Technology

Flow charts available on pages 6 and 7

BSP / NBR 8131 THREAD

Type	DN	d	i	H1	H2	m	n	B	l	L	D	A	G	t max	Weight / kg
NDV	6	G1/8	9	51	56	8	10	16	19	38	24	13	Pg7	4	0,12
NDV	8	G1/4	12	65	71	13	15	25	24	48	29	19	Pg11	7	0,25
NDV	10	G3/8	13,5	68	75	15	17	30	29	58	29	19	Pg11	7	0,4
NDV	12	G1/2	14,5	82	92	18	21	35	34	68	38	23	Pg16	7	0,6
NDV	16	G3/4	17,5	96	106	23	26	45	39	78	38	23	Pg16	7	1,1
NDV	20	G1	19,5	121	134	25	30	50	54	108	49	38	Pg29	10	2,4
NDV	25	G1 1/4	21,5	126	139	30	35	60	54	108	49	38	Pg29	10	2,8
NDV	30	G1 1/2	23,5	131	144	35	40	70	54	108	49	38	Pg29	10	3,5
NDV	40	G2	25,5	141	154	45	50	90	60	120	49	38	Pg29	10	6,24

NPT / ANSI B1.20.1 / NBR 12912 THREAD

Type	DN	d	i	H1	H2	m	n	B	l	L	D	A	G	t max	Weight / kg
NDV	6	1/8NPT	9	51	56	8	10	16	19	38	24	13	Pg7	4	0,12
NDV	8	1/4NPT	12	65	71	13	15	25	24	48	29	19	Pg11	7	0,25
NDV	10	3/8NPT	12	68	75	15	17	30	29	58	29	19	Pg11	7	0,4
NDV	12	1/2NPT	14	82	92	18	21	35	34	68	38	23	Pg16	7	0,6
NDV	16	3/4NPT	14	96	106	23	26	45	39	78	38	23	Pg16	7	1,1
NDV	20	1NPT	19,5	121	134	25	30	50	54	108	49	38	Pg29	10	2,4
NDV	25	1 1/4NPT	21	126	139	30	35	60	54	108	49	38	Pg29	10	2,8
NDV	30	1 1/2NPT	24	131	144	35	40	70	54	108	49	38	Pg29	10	3,5
NDV	40	2NPT	19,9	141	154	45	50	90	60	120	49	38	Pg29	10	6,3

Coding Example:

NDV-DN6-G1/8 (Flow control valve, 010 flow rate, BSP G1/4 thread, V).

Material: In AISI 316, add the letter I at the end of the code.

For Viton seals, add the letter V at the end of the code.

In case of incompatibility between this catalog and the website, please contact our sales department.

FLOW CONTROL VALVE WITH CHECK VALVE - NDRV

Valve designed to control and shut off flow in only one direction; in the opposite direction, free flow is allowed. Features a graduated handle and locking screw for handle fixation.



MHA ZENTGRAF
Flow Control Technology

Seals & Operating Temperatures
NBR (Buna-N): -25°C to 100°C (-13°F to 212°F) - (Standard)
FKM (Viton): -15°C to 200°C (5°F to 392°F) - V

Surface Treatment
White Zinc Plating (Hexavalent Chromium-Free)

Materials
Carbon Steel
Stainless Steel AISI 316

Nominal Pressure
AISI 350 bar

Check Valve Opening Pressure
0,5 bar

Flow control valves must not be used as shut-off devices.
Minor leakage may occur in the closed position. (DIN EN 12266-1 leakage rate A-B - water as test medium.)

Flow Control Valve With Ckeck Valve

NDRV



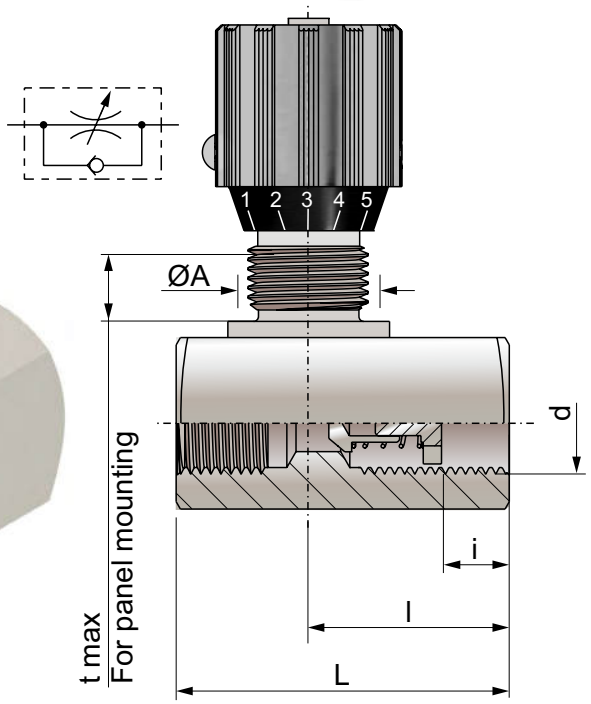

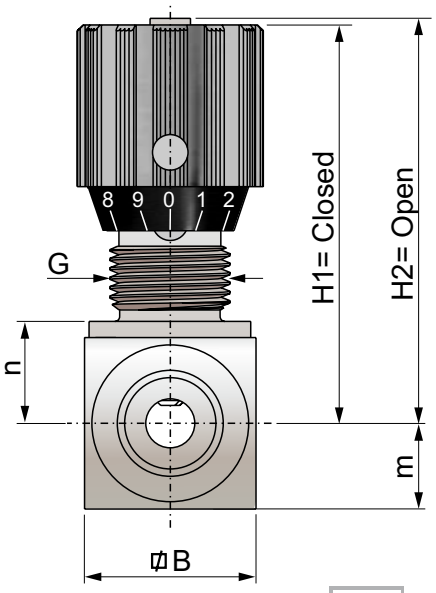

MHA ZENTGRAF
Flow Control Technology

Flow charts available on pages 6 and 7

BSP G THREAD / NBR 8133

Type	DN	d	i	H1	H2	m	n	B	l	L	D	A	G	t max	Weight / kg
NDRV	6	G1/8	9,5	51	56	8	10	16	26	45	24	13	Pg7	4	0,1
NDRV	8	G1/4	13,5	65	71	13	15	25	34	55	29	19	Pg11	7	0,3
NDRV	10	G3/8	13,5	68	75	15	17	30	41	65	29	19	Pg11	7	0,45
NDRV	12	G1/2	15,5	82	92	18	21	35	44	73	38	23	Pg16	7	0,7
NDRV	16	G3/4	17,5	96	106	23	26	45	57	88	38	23	Pg16	7	1,26
NDRV	20	G1	19,5	121	134	25	30	50	77	127	49	38	Pg29	10	2,6
NDRV	25	G1 1/4	21,5	126	139	30	35	60	93	143	49	38	Pg29	10	3,7
NDRV	30	G1 1/2	23,5	131	144	35	40	70	91	143	49	38	Pg29	10	4,76
NDRV	40	G2	25,5	141	154	45	50	90	111	165	49	38	Pg29	10	8,52

NPT THREAD / ANSI B1.20.1 / NBR 12912

Type	DN	d	i	H1	H2	m	n	B	l	L	D	A	G	t max	Weight / kg
NDRV	6	1/8NPT	9,5	51	56	8	10	16	26	45	24	13	Pg7	4	0,1
NDRV	8	1/4NPT	13,5	65	71	13	15	25	34	55	29	19	Pg11	7	0,3
NDRV	10	3/8NPT	13,5	68	75	15	17	30	41	65	29	19	Pg11	7	0,45
NDRV	12	1/2NPT	15,5	82	92	18	21	35	44	73	38	23	Pg16	7	0,7
NDRV	16	3/4NPT	17,5	96	106	23	26	45	57	88	38	23	Pg16	7	1,26
NDRV	20	1NPT	19,5	121	134	25	30	50	77	127	49	38	Pg29	10	2,6
NDRV	25	1 1/4NPT	21,5	126	139	30	35	60	93	143	49	38	Pg29	10	3,7
NDRV	30	1 1/2NPT	23,5	131	144	35	40	70	91	143	49	38	Pg29	10	4,76
NDRV	40	2NPT	25,5	141	154	45	50	90	111	165	49	38	Pg29	10	8,52

Coding Example:

NDRV-DN6-G1/8 (Flow control valve with check valve DN 6 G1/8 BSP).

Material: For AISI 316 stainless steel, add the letter I at the end of the code.

For Viton seals, add the letter V at the end of the code.

In case of incompatibility between this catalog and the website, please contact our technical department.

The displayed flow values are based on hydraulic oil with a density of 880 kg/m³ and kinematic viscosity V of 35 mm²/s.

NDV / NDRV - DN6

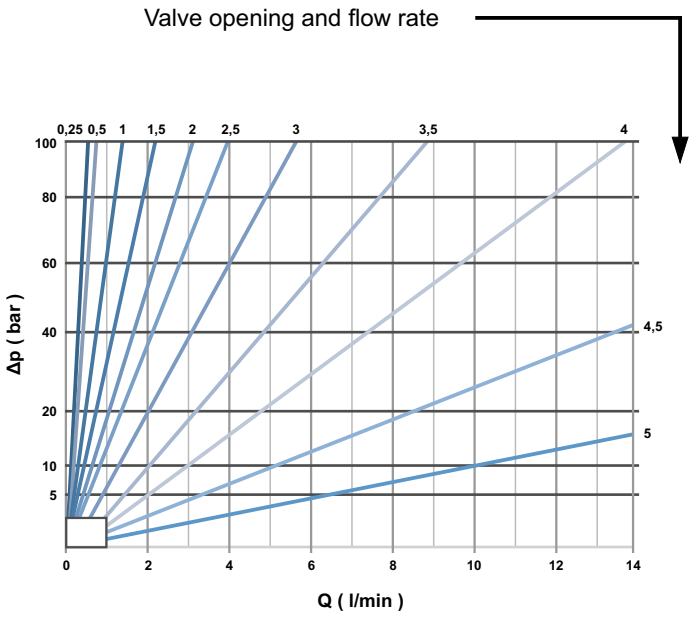

NDV / NDRV - DN8

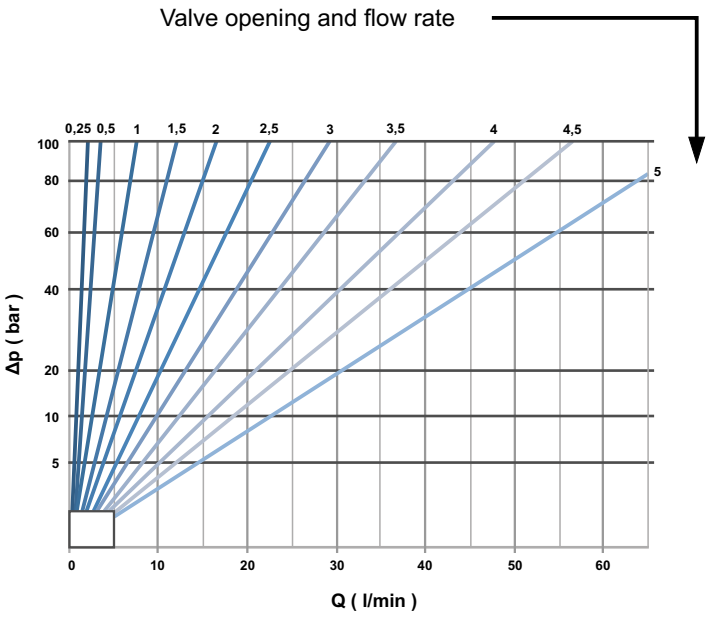

NDV / NDRV - DN10

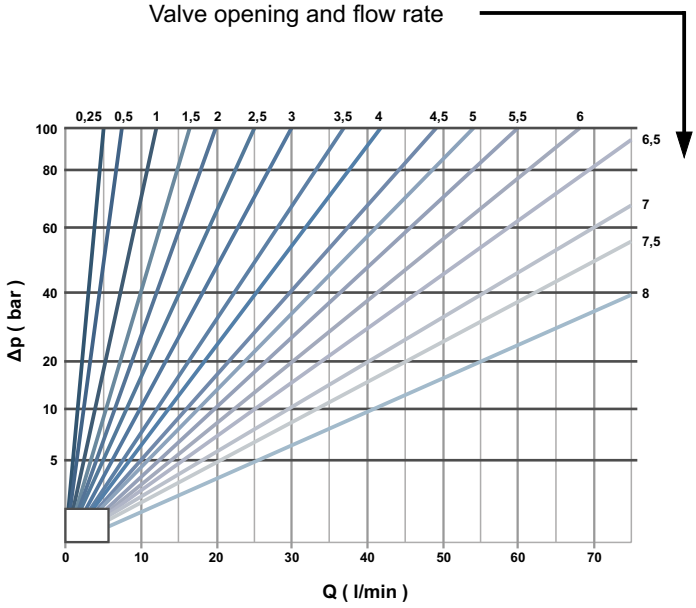

NDV / NDRV - DN12

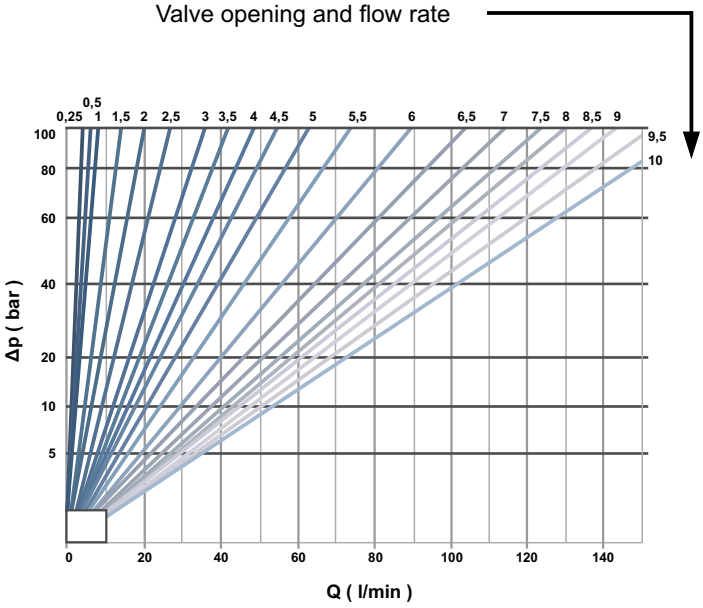

The displayed flow values are based on hydraulic oil with a density of 880 kg/m³ and kinematic viscosity V of 35 mm²/s.

NDV / NDRV - DN16

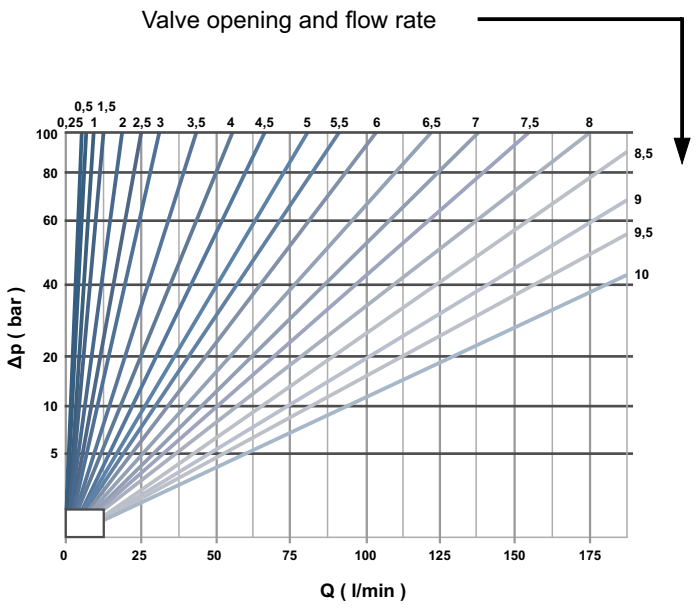

NDV / NDRV - DN20/25/30/40

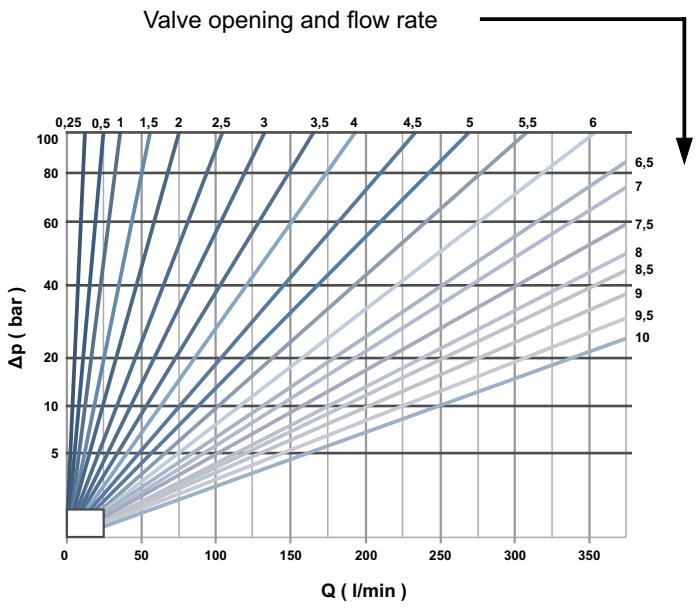

NDRV - DN6 - DN40

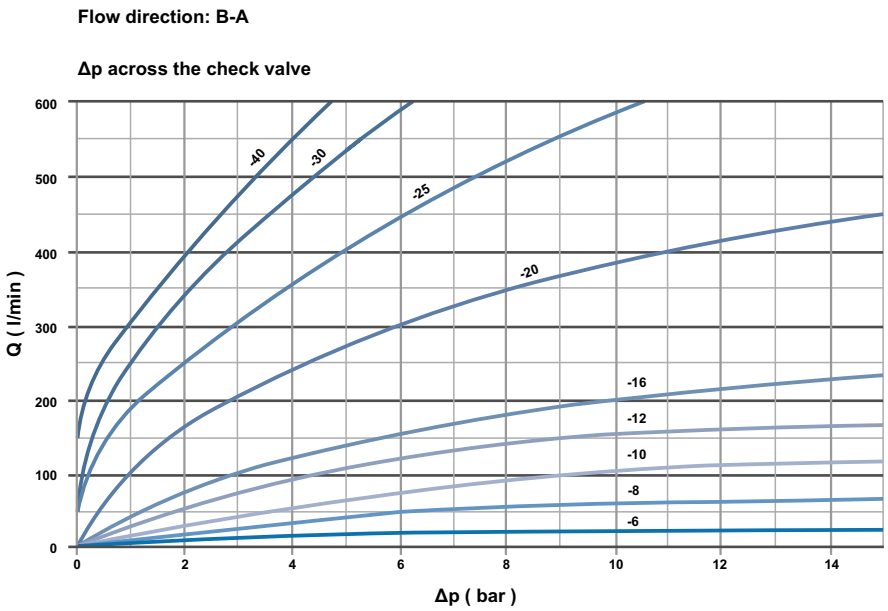



gepef

Ball Valve

BALL VALVE

Through MHA-Zentgraf representation in Brazil, GEPEF supplies ball valves for pressures up to 800 bar, temperatures up to 500°C, and nominal diameters up to 200 mm in several configurations (threaded, tube, flanged, dual and multiple ports, etc.).

The bodies of the ball valves supplied by GEPEF are manufactured by MHA-Zentgraf (Germany), and the adapters are produced under our own design and specification, in our machining facility, providing a wide range of adapters as well as versatility for the valves, including combinations of different end connections in the same valve.



MHA ZENTGRAF
Flow Control Technology

Materials – Carbon Steel Valve
Body – Carbon Steel
Ball – Hardened Chrome
Connection – Carbon Steel
O-ring – NBR / Buna-N

Materials – Stainless Steel Valve
Body – AISI 316 Stainless Steel
Ball – AISI 316 Stainless Steel
Connection – AISI 316 Stainless Steel
O-ring – Viton

Seals and Operating Temperatures
NBR-Buna-N (-25°C to 100°C) (-13°F to +212°F) – (Standard)
(FKM) Viton (-15°C to 200°C) (-5°F to +392°F)

Surface Treatment
White Trivalent Zinc Plating (Cr VI Free)

Ball Seal
POM – Standard for carbon steel and stainless steel
Optional PTFE – Teflon

2-WAY BALL VALVE – BKH TYPE



MHA ZENTGRAF
Flow Control Technology

KH DN13-25 Female BSP, NPT and UNF

PN 250 - 500 Bar / 3625 - 7251 PSI

BSP - DIN ISO 228

NPT - ANSI B1.20.1

UNF - SAE J514



MHA ZENTGRAF
Flow Control Technology

BKH DN13-25 Male Tube

PN 250 - 500 Bar / 3625 - 7251 PSI

Light Tube – DIN 2353L

Heavy Tube – DIN 2353S

ORFS - ISO 8434-3



MHA ZENTGRAF
Flow Control Technology

BKH DN13-25 Male JIC-SAE J514

PN 250 - 500 Bar / 3625 - 7251 PSI

UNF - SAE J514

Consult Technical Department

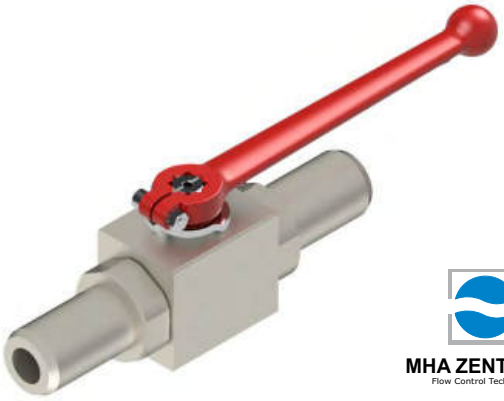

MHA ZENTGRAF
Flow Control Technology

BKH DN13-25-AS

Smooth Tube Nipple for Hose

PN 160 Bar / 2320 PSI



MHA ZENTGRAF
Flow Control Technology

BKH DN13-25-SW

Socket Weld Connection

ASME B16.11

PN 350 - 420 Bar / 5076 - 6091 PSI



MHA ZENTGRAF
Flow Control Technology

BKH DN13-25-SAE FS

Flange SAE Split Flange

PN 350 Bar / 5076 PSI

ISO 6162-1

PN 420 Bar / 6091 PSI

ISO 6162-2

2-WAY BALL VALVE – MKHP TYPE



MHA ZENTGRAF
Flow Control Technology

MKHP DN32-50 – Female BSP, NPT and UNF Thread
PN 420 Bar / 6091 PSI
BSP - DIN ISO 228
NPT - ANSI B1.20.1
UNF - SAE J514



MHA ZENTGRAF
Flow Control Technology

MKHP DN32-50 – Male Tube Thread
PN 420 Bar / 6091 PSI
Light Tube – DIN 2353L
Heavy Tube – DIN 2353S



MHA ZENTGRAF
Flow Control Technology

MKHP DN32-50-SW
Socket Weld Connection
ASME B16.11
PN 420 Bar / 6091 PSI



MHA ZENTGRAF
Flow Control Technology

MKHP DN32-50-AS
Smooth Tube Nipple for Hose
PN 160 Bar / 2320 PSI



MHA ZENTGRAF
Flow Control Technology

MKHP DN32-50 - SAE FS
SAE Split Flange
PN 350 Bar / 5076 PSI
ISO 6162-1
PN 420 Bar / 6091 PSI
ISO 6162-2

BALL VALVE WITH ACCESSORIES



MHA ZENTGRAF
Flow Control Technology

Ball Valve with Padlock Locking Device



MHA ZENTGRAF
Flow Control Technology

Ball Valve with Inductive Sensor

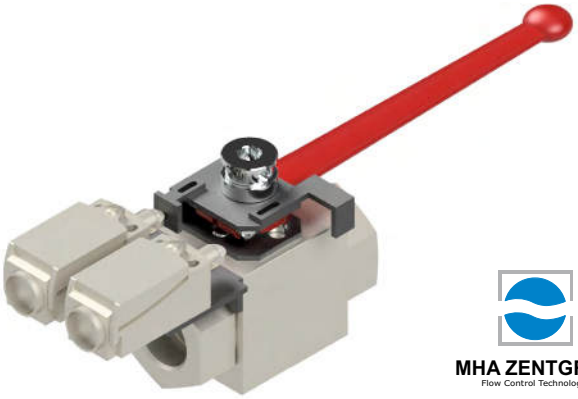

MHA ZENTGRAF
Flow Control Technology

Ball Valve with Mechanical Limit Switch



MHA ZENTGRAF
Flow Control Technology

Ball Valve with Pneumatic Actuator



MHA ZENTGRAF
Flow Control Technology

Ball Valve for Panel Mounting

3-WAY BALL VALVE – BK3 TYPE



MHA ZENTGRAF
Flow Control Technology

BK3 DN13-50 – Female BSP and NPT Thread
PN 315-500 Bar
BSP - DIN ISO 228
NPT - ANSI B1.20.1



MHA ZENTGRAF
Flow Control Technology

BK3-S DN13-50 – Female BSP and NPT Thread
PN 315-500 Bar
BSP - DIN ISO 228
NPT - ANSI B1.20.1

Ball Valve 2-Way with Female Thread BSP and NPT

BKH BSP / NPT



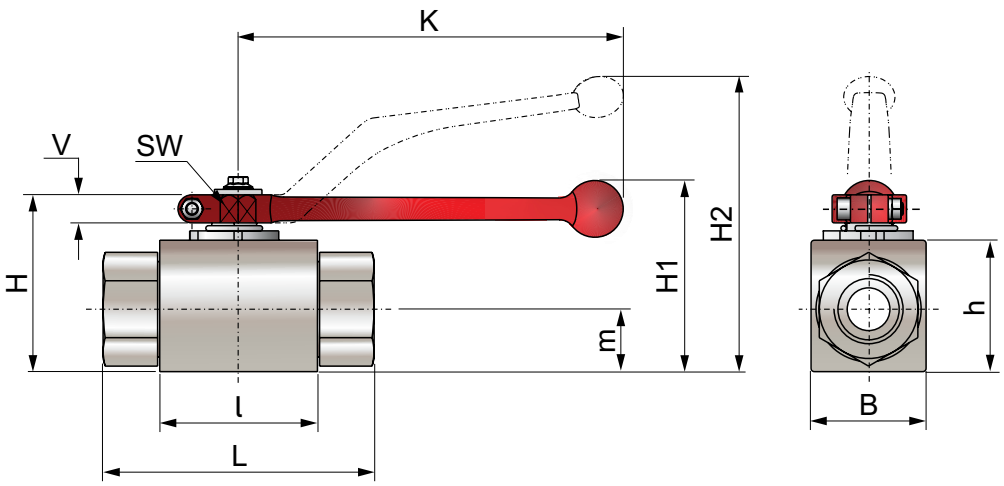

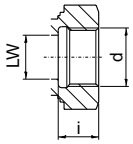

DIN ISO 228

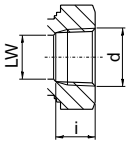

ANSI B1.20.1 NPT

MHA ZENTGRAF
Flow Control Technology

G BSP Thread / DIN 228 / NBR 8133

Type	DN/LW	L	l	B	H	h	m	V	SW	K	i	d	H1	H2	PN bar	Weight / Kg
BKH DN6 G1/4	6	69	40	26	47	33	13,5	11	9	115	14	G1/4		82	500	0,40
BKH DN10 G3/8	10	72	43	32	52	38	17,5	11	9	115	14	G3/8		86	500	0,54
BKH DN13 G1/2	13	83	48	35	54	40	19	11	9	115	16,3	G1/2		89	500	0,65
BKH DN20 G3/4	20	95	62	49	75	57	24,5	14	14	200	18	G3/4	79		420	1,5
BKH DN25 G1	25	113	66	58	83	65	29,5	14	14	200	20	G1	87		350	2,2
BKH DN25 G1.1/4	25	120	66	58	83	65	29,5	14	14	200	22	G1 1/4	87		350	2,3
BKH DN25 G1.1/2	25	130	66	58	83	65	29,5	14	14	200	24	G1 1/2	87		350	2,6

NPT Thread / ANSI B1.20.1 / NBR 12912

Type	DN/LW	L	l	B	H	h	m	V	SW	K	i	d	H1	H2	PN bar	Weight / Kg
BKH DN6 1/4NPT	6	69	40	26	47	33	13,5	11	9	115	13,7	1/4NPT		82	500	0,40
BKH DN10 3/8NPT	10	72	43	32	52	38	17,5	11	9	115	13,5	3/8NPT		86	500	0,55
BKH DN13 1/2NPT	13	83	48	35	54	40	19	11	9	115	17	1/2NPT		89	500	0,75
BKH DN20 3/4NPT	20	95	62	49	75	57	24,5	14	14	200	18,3	3/4NPT	79		420	1,63
BKH DN25 1NPT	25	113	66	58	83	65	29,5	14	14	200	21,6	1NPT	87		350	2,3
BKH DN25 1.1/4NPT	25	120	66	58	83	65	29,5	14	14	200	22,1	1 1/4NPT	87		350	2,51
BKH DN25 1.1/2NPT	25	130	66	58	83	65	29,5	14	14	200	22,1	1 1/2NPT	87		250	2,7

Coding Example:

BKH DN6 G1/4 (DN6 ball valve, carbon steel, with female G1/4BSP thread).

For AISI 316 material, add the letter I at the end of the code.

For Viton seals, add the letter V at the end of the code.

If another type of ball valve not listed in this catalog is required, please contact our technical department.

Ball Valve 2-Way with Female Thread UNF SAE J514

BKH SAE J514



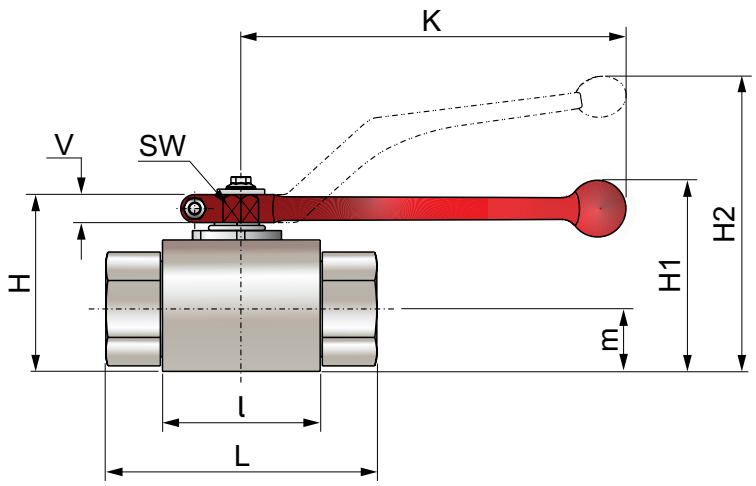

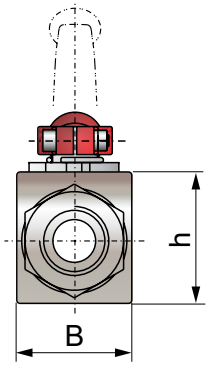

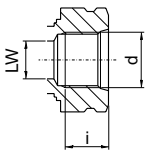

SAE J514

MHA ZENTGRAF
Flow Control Technology

UNF SAE J514 Thread

Type	DN/LW	L	l	B	H	h	m	V	SW	K	i	d	H1	H2	PN bar	Weight / Kg
BKH DN10 9/16 UNF	10	72	43	32	52	38	17,5	11	9	115	13	9/16”-18 UNF		86	500	0,50
BKH DN13 3/4 UNF	13	83	48	35	54	40	19	11	9	115	15	3/4”-16 UNF		89	500	0,70
BKH DN20 1.1/16 UNF	20	95	62	49	75	57	24,5	14	14	200	20	1.1/16”-12 UN	79		420	1,55
BKH DN25 1.5/16 UNF	25	113	66	58	83	65	29,5	14	14	200	20	1.5/16”-12 UN	87		350	2,10

Coding Example:

BKH DN10 9/16” UNF (DN10 ball valve, carbon steel, with male 9/16”-18 UNF SAE J514 thread).

For AISI 316 material, add the letter I at the end of the code.

For Viton seals, add the letter V at the end of the code.

If another type of ball valve not listed in this catalog is required, please contact our technical department.

BKH DIN 2353 / ISO 8434-1



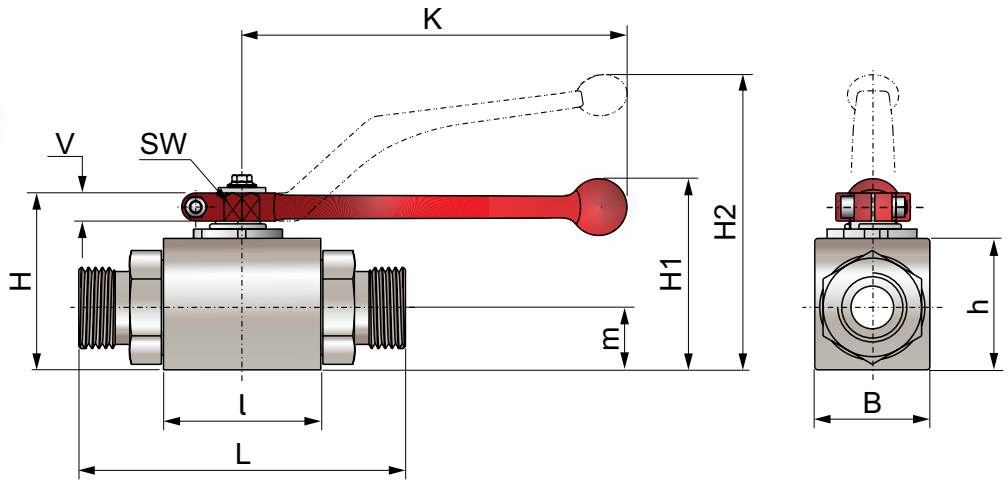

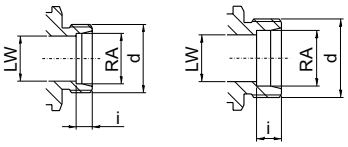

DIN 2353 L DIN 2353 S

MHA ZENTGRAF
Flow Control Technology

Light Series DIN 2353L Metric Thread

Type	DN	RA	LW	L	l	B	H	h	m	V	SW	K	i	d	H1	H2	PN bar	Weight / Kg
BKH DN6 6L	6	6	5	67	40	26	47	33	13,5	11	9	115	7	M12x1,5		82	500	0,38
BKH DN6 8L	6	8	6	67	40	26	47	33	13,5	11	9	115	7	M14x1,5		82	500	0,38
BKH DN6 10L	6	10	6	74	40	26	47	33	13,5	11	9	115	7	M16x1,5		82	500	0,38
BKH DN10 12L	10	12	10	74	43	32	52	38	17,5	11	9	115	7	M18x1,5		86	500	0,50
BKH DN13 15L	13	15	13	82	48	35	54	40	19	11	9	115	7	M22x1,5		89	500	0,61
BKH DN13 18L	13	18	13	82	48	35	54	40	19	11	9	115	7,5	M26x1,5		89	500	0,60
BKH DN20 22L	20	22	20	101	62	49	75	57	24,5	14	14	200	7,5	M30x2	79		420	1,49
BKH DN25 28L	25	28	25	108	66	58	83	65	29,5	14	14	200	7,5	M36x2	87		350	2,0
BKH DN25 35L	25	35	25	112	66	58	83	65	29,5	14	14	200	10,5	M45x2	87		350	2,12
BKH DN25 42L	25	42	25	112	66	58	83	65	29,5	14	14	200	11	M52x2	87		350	2,27

Heavy Series DIN 2353S Metric Thread

Type	DN	RA	LW	L	l	B	H	h	m	V	SW	K	i	d	H1	H2	PN bar	Weight / Kg
BKH DN6 8S	6	8	6	73	40	26	47	33	13,5	11	9	115	7	M16x1,5		82	500	0,38
BKH DN6 10S	6	10	6	73	40	26	47	33	13,5	11	9	115	7,5	M18x1,5		82	500	0,38
BKH DN6 12S	6	12	6	76	40	26	47	33	13,5	11	9	115	7,5	M20x1,5		82	500	0,38
BKH DN10 14S	10	14	10	80	43	32	52	38	17,5	11	9	115	8	M22x1,5		86	500	0,50
BKH DN13 16S	13	16	13	86	48	35	54	40	19	11	9	115	8,5	M24x1,5		89	500	0,61
BKH DN13 20S	13	20	13	90	48	35	54	40	19	11	9	115	10,5	M30x2		89	500	0,60
BKH DN20 25S	20	25	20	109	62	49	75	57	24,5	14	14	200	12	M36x2	79		420	1,55
BKH DN25 30S	25	30	25	120	66	58	83	65	29,5	14	14	200	13,5	M42x2	87		350	2,10
BKH DN25 38S	25	35	25	124	66	58	83	65	29,5	14	14	200	16	M52x2	87		350	2,30

Coding Example:

BKH DN6 8S (DN6 ball valve, carbon steel, with male M16x1.5 - 8S DIN 2353 thread - Heavy Series).

For AISI 316 material, add the letter I at the end of the code.

For Viton seals, add the letter V at the end of the code.

If another type of ball valve not listed in this catalog is required, please contact our technical department.

BKH AS160

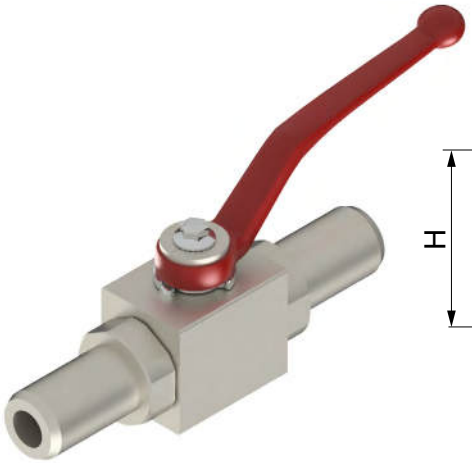

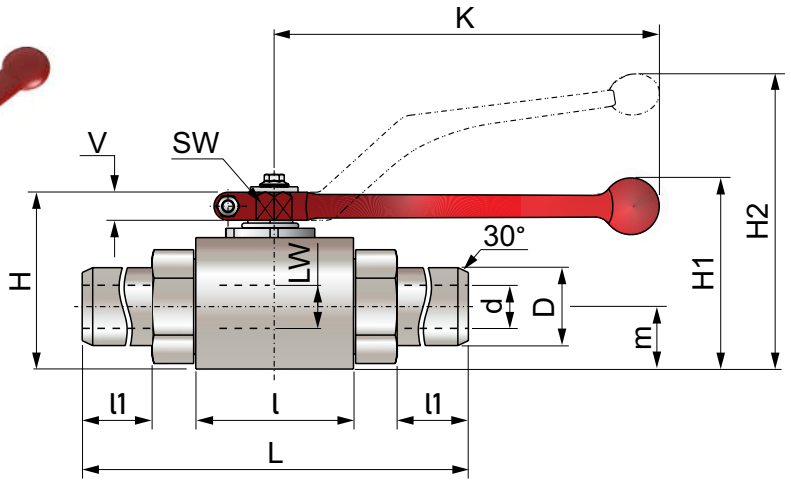

MHA ZENTGRAF
Flow Control Technology

BKH AS160

Type	DN	LW	L	l	B	H	h	m	V	SW	K	d	D	l1	H1	H2	PN bar	Weight / Kg
BKH DN10 AS160	10	10	150	43	32	52	38	17,5	11	9	115	10	17,2	42		86	160	0,64
BKH DN13 AS160	13	13	181	48	35	54	40	19	11	9	115	13	21,3	51		89	160	0,82
BKH DN20 AS160	20	20	200	62	49	75	57	24,5	14	14	200	20	26,9	48,5	79		160	1,85
BKH DN25 AS160	25	25	210	66	58	83	65	29,5	14	14	200	25	33,7	51,2	87		160	2,60

Coding Example:

BKH DN10 AS160 (DN10 ball valve, carbon steel, for AS160 welding).

For AISI 316 material, add the letter I at the end of the code.

For Viton seals, add the letter V at the end of the code.

If another type of ball valve not listed in this catalog is required, please contact our technical department.

Ball Valve 2-Way, for Socket Weld SW - ASME B 16.11

BKH SW



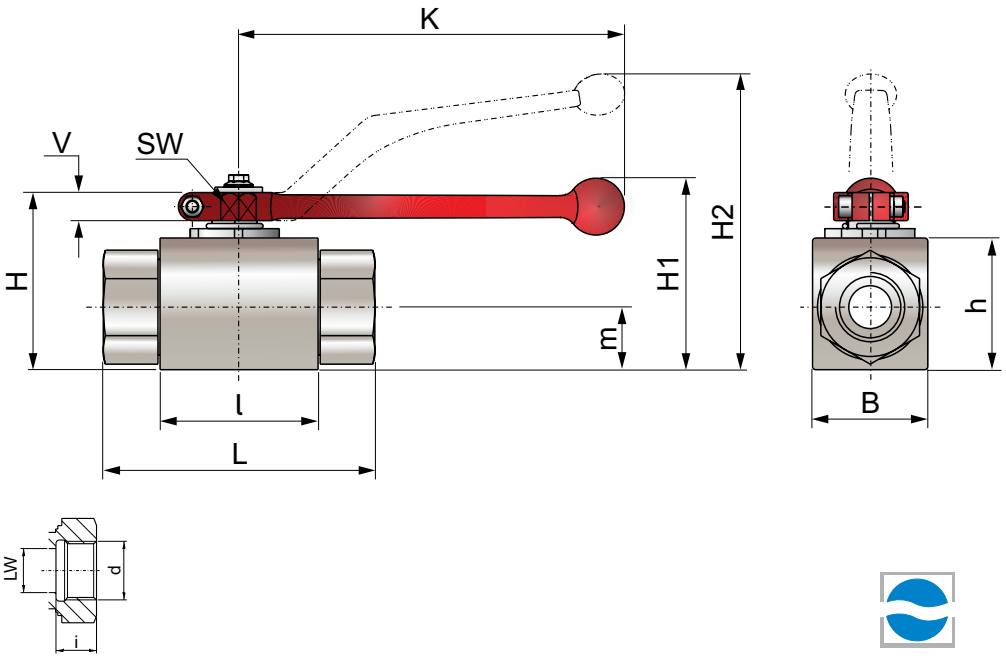

MHA ZENTGRAF
Flow Control Technology

BKH SW - Socket Weld SW - ASME B16.11

Type	DN	LW	L	l	B	H	h	m	V	SW	K	i	d	H1	H2	PN bar	Weight / Kg
BKH DN13 SW 1/2	13	13	83	48	35	54	40	19	11	9	115	9,5	21,8		86	410	0,65
BKH DN20 SW 3/4	20	20	95	62	49	75	57	24,5	14	14	200	12,5	27,4	79		410	1,50
BKH DN25 SW 1	25	25	113	66	58	83	65	29,5	14	14	200	12,5	33,8	87		350	2,20

Coding Example:

BKH DN13 SW 1/2 (DN13 ball valve, carbon steel, for 1/2" socket weld - ASME B16.11).

For AISI 316 material, add the letter I at the end of the code.

For Viton seals, add the letter V at the end of the code.

If another type of ball valve not listed in this catalog is required, please contact our technical department.

BKH SAE FS

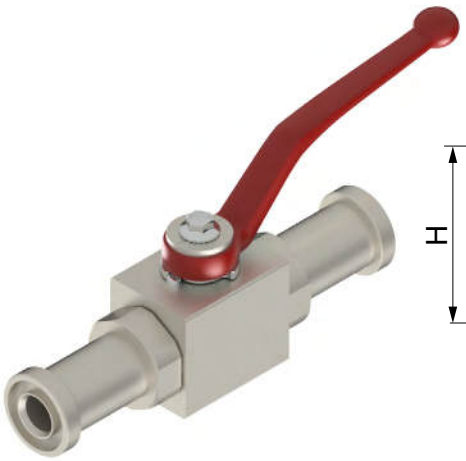

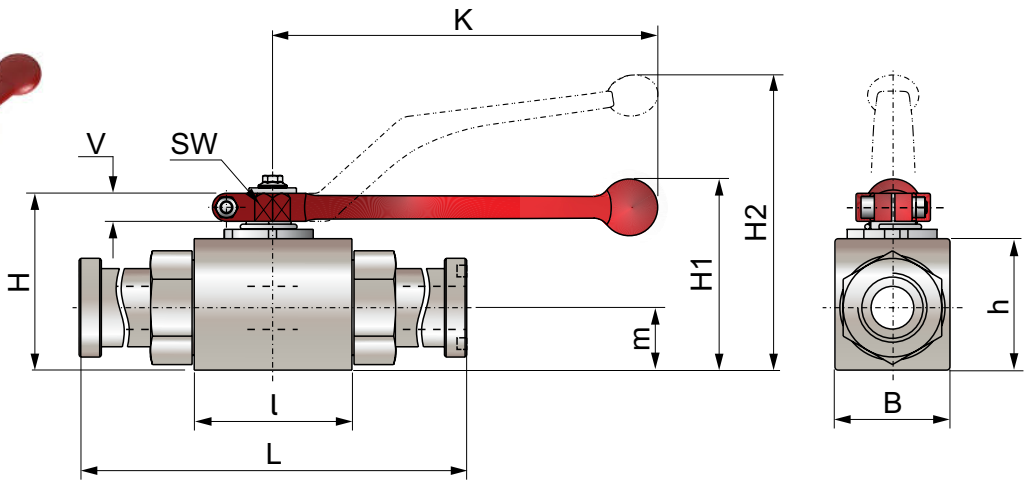

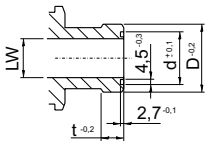

MHA ZENTGRAF
Flow Control Technology

Observe the pressure ratings of the connecting flanges.

ISO 6162-1

Type	DN	LW	L	l	B	H	h	m	V	SW	K	d±0,1	D-0,2	t-0,2	H1	H2	PN bar	Weight / Kg
BKH DN13 SAE FS210	13	13	151	48	35	54	40	19	11	9	115	25,5	30,2	6,8		89	350	0,85
BKH DN20 SAE FS210	20	19	162	62	49	75	57	24,5	14	14	200	31,9	38,1	6,8	79		350	1,87
BKH DN25 SAE FS210	25	25	178	66	58	83	65	29,5	14	14	200	39,8	44,4	8,1	87		350	2,70

Observe the pressure ratings of the connecting flanges.

ISO 6162-2

Type	DN	LW	L	l	B	H	h	m	V	SW	K	d±0,1	D-0,2	t-0,2	H1	H2	PN bar	Weight / Kg
BKH DN13 SAE FS420	13	13	151	48	35	54	40	19	11	9	115	25,5	31,8	7,9		89	420	0,90
BKH DN20 SAE FS420	20	19	174	62	49	75	57	24,5	14	14	200	31,9	41,3	8,9	79		420	2,00
BKH DN25 SAE FS420	25	25	198	66	58	83	65	29,5	14	14	200	39,8	47,6	9,6	87		350	3,00

Coding Example:

BKH DN13 SAE FS210 (DN13 ball valve, carbon steel for SAE 210 ISO 6162-1 flange).

For AISI 316 material, add the letter I at the end of the code.

For Viton seals, add the letter V at the end of the code.

If another type of ball valve not listed in this catalog is required, please contact our technical department.

gepef

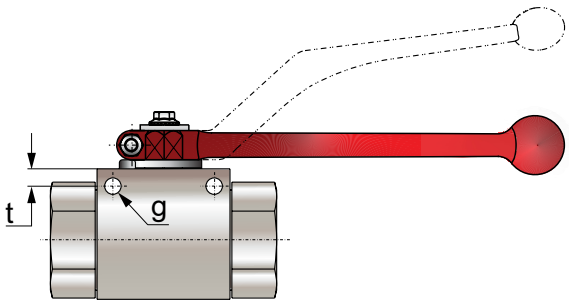

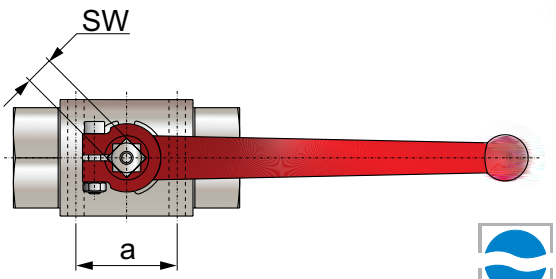

MHA ZENTGRAF
Flow Control Technology

Mounting Holes				
DN	SW	a	g	t
6	9	31	4,3	4,5
10	9	32	4,3	4
13	9	32	4,3	4
20	14	44	6,2	6
25	14	44	6,3	6

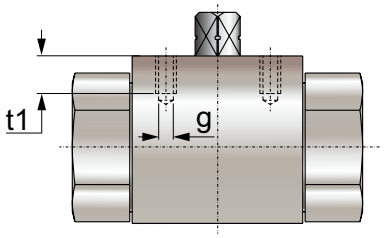

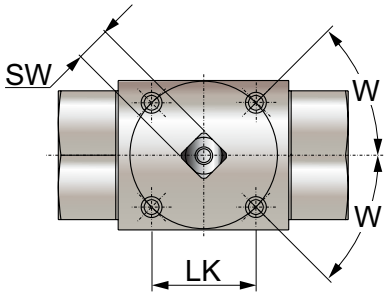

MHA ZENTGRAF
Flow Control Technology

Mounting Threads According to ISO 5211						
DN	SW	LK	g	t1	W	ISO 5211
6	9	36	M5	6	30°*	(F03)*
10	9	36	M5	7	45°	F03
13	9	36	M5	6	45°	F03
20	14	50	M6	10	45°	F03
25	14	50	M6	10	45°	F03

*30° Does not correspond to ISO 5211 standard.

2-Way Ball Valve with Female Thread BSP, NPT e UNF

MKHP420



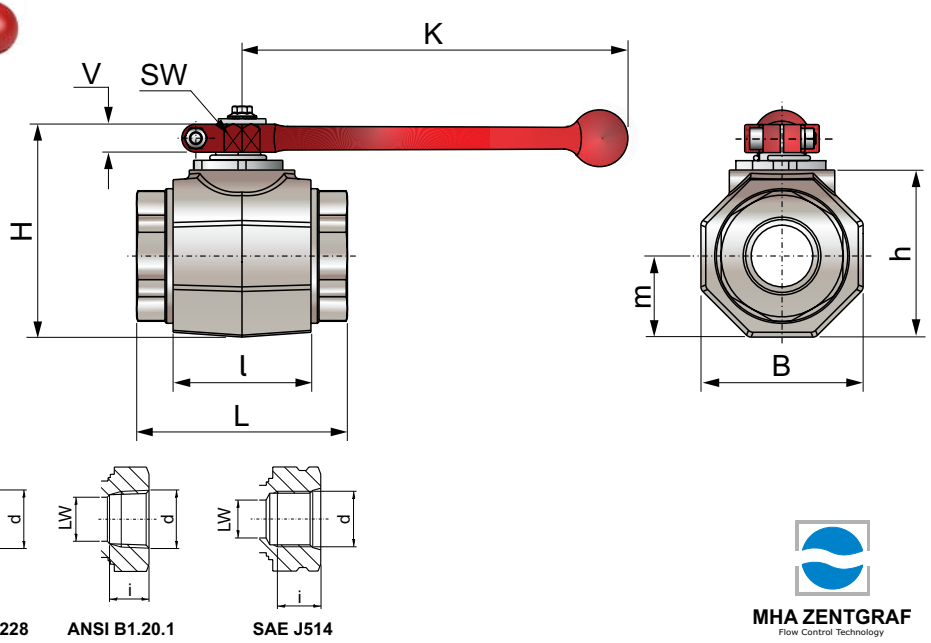

G BSP Thread / DIN 228 / NBR 8133

Type	DN	LW	L	l	B	H	h	m	V	SW	K	i	d	PN bar	Weight / Kg
MKHP420 DN32 G1.1/4	32	32	111	80	81	107	86	40,5	16,5	17	320	22	G1 1/4	420	3,5
MKHP420 DN40 G1.1/2	40	38	130	85	100	124	103	50	16,5	17	320	24	G1 1/2	420	5,7
MKHP420 DN50 G2	50	48	140	100	118	138	117	59	16,5	17	320	26	G2	420	8,2

NPT Thread / ANSI B1.20.1 / NBR 12912

Type	DN	LW	L	l	B	H	h	m	V	SW	K	i	d	PN bar	Weight / Kg
MKHP420 DN32 1.1/4 NPT	32	32	120	80	81	107	86	40,5	16,5	17	320	22,1	1.1/4 NPT	420	3,6
MKHP420 DN40 1.1/2 NPT	40	38	130	85	100	124	103	50	16,5	17	320	22,1	1.1/2 NPT	420	5,7
MKHP420 DN50 2 NPT	50	48	140	100	118	138	117	59	16,5	17	320	30,3	2 NPT	420	8,2

Female UNF Thread SAE J514

Type	DN	LW	L	l	B	H	h	m	V	SW	K	i	d	PN bar	Weight / Kg
MKHP420 DN32 1.5/8 UNF	32	30	111	80	81	107	86	40,5	16,5	17	320	20	1.5/8-12 UNF	420	3,6
MKHP420 DN40 1.7/8 UNF	40	38	130	85	100	124	103	50	16,5	17	320	20	1.7/8-12 UNF	420	5,7
MKHP420 DN50 2.1/2 UNF	50	45	140	100	118	138	117	59	16,5	17	320	20	2.1/2-12 UNF	420	8,0

Coding Example:

MKHP420 DN32 G1.1/4 (DN32 ball valve, carbon steel with G1.1/4 BSP female thread).

For AISI 316 material, add the letter I at the end of the code.

For Viton seals, add the letter V at the end of the code.

If another type of ball valve not listed in this catalog is required, please contact our technical department.

MKHP420 DIN 2353 / ISO 8434-1



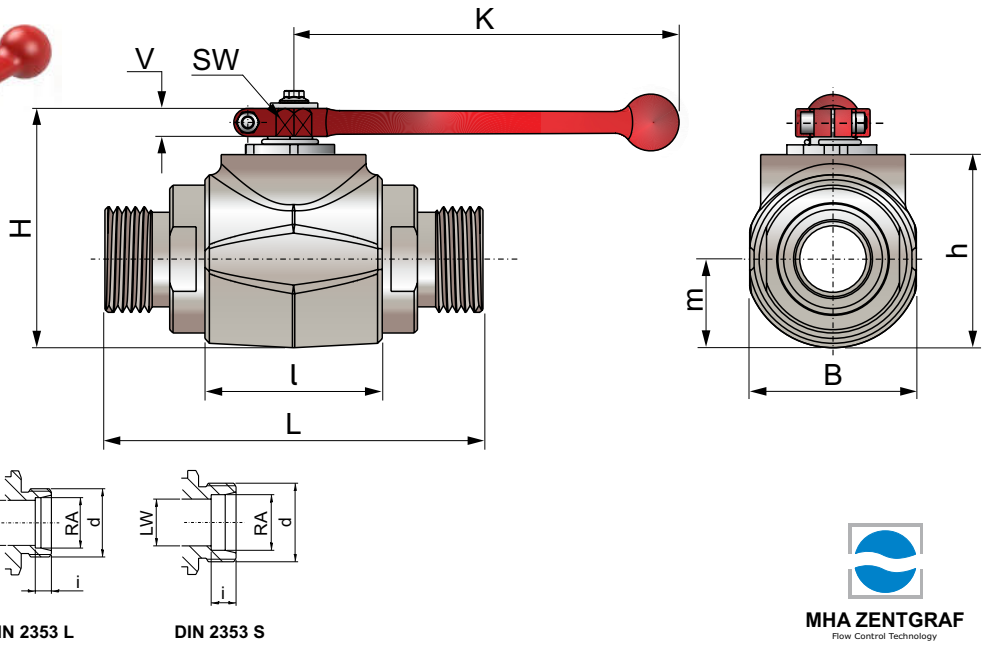

MHA ZENTGRAF
Flow Control Technology

Metric Thread DIN 2353L Light Series

Type	DN	RA	LW	L	B	H	h	m	V	SW	K	i	d	PN bar	Weight / Kg
MKHP420 DN32 35L	32	35	32	136	81	107	86	40,5	16,5	17	320	10,5	M45x2	420	3,6
MKHP420 DN40 42L	40	42	38	147	100	124	103	50	16,5	17	320	11	M52x2	420	5,6

Metric Thread DIN 2353S Heavy Series

Type	DN	RA	LW	L	l	B	H	h	m	V	SW	K	i	d	PN bar	Weight / Kg
MKHP420 DN32 38S	32	38	32	148	80	81	107	86	40,5	16,5	17	320	16	M52x2	420	3,8

Coding Example:

MKHP420 DN40 1.7/8 UNF (DN40 ball valve, carbon steel with 1.7/8 UNF female thread).

For AISI 316 material, add the letter I at the end of the code.

For Viton seals, add the letter V at the end of the code.

If another type of ball valve not listed in this catalog is required, please contact our technical department.

MKHP SAE FS

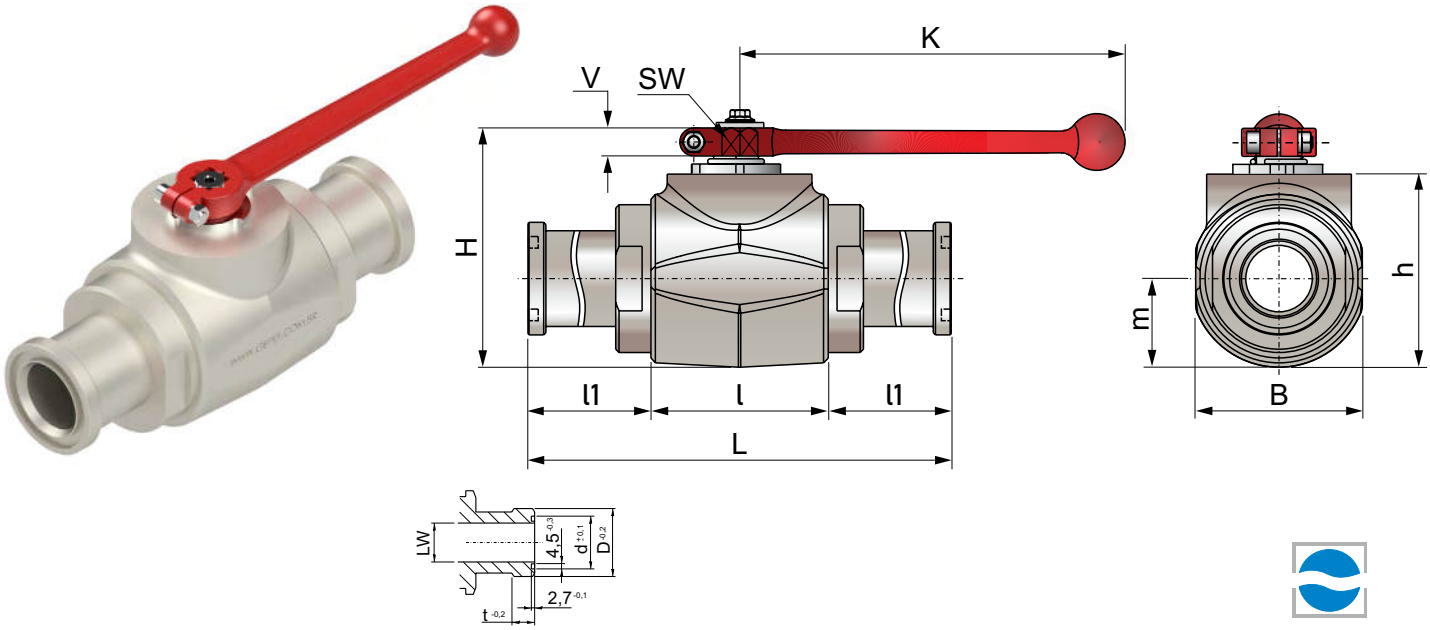

MHA ZENTGRAF
Flow Control Technology

Observe the pressure ratings of the connecting flanges.

ISO 6162-1 210 bar / 3000 PSI

Type	DN	LW	L	l	B	H	h	m	V	SW	K	d±0,1	D-0,2	t-0,2	PN bar	Weight / Kg
MKHP420 DN32 SAE FS210	32	30	191	80	81	107	86	40,5	16,5	17	320	44,6	50,8	8,1	280	4,3
MKHP420 DN40 SAE FS210	40	38	231	85	100	124	103	50	16,5	17	320	54,1	60,3	8,1	210	6,6
MKHP420 DN50 SAE FS210	50	48	231	100	118	138	117	59	16,5	17	320	63,6	71,4	9,6	210	9,3

Observe the pressure ratings of the connecting flanges.

ISO 6162-2 420 bar / 6000 PSI

Type	DN	LW	L	l	B	H	h	m	V	SW	K	d±0,1	D-0,2	t-0,2	PN bar	Weight / Kg
MKHP420 DN32 SAE FS420	32	30	223	80	81	107	86	40,5	16,5	17	320	44,6	54	10,4	420	4,8
MKHP420 DN40 SAE FS420	40	38	281	85	100	124	103	50	16,5	17	320	54,1	63,5	12,7	420	7,5
MKHP420 DN50 SAE FS420	50	48	316	100	118	138	117	59	16,5	17	320	63,6	79,4	12,7	420	11,4

Coding Example:

MKHP420 DN40 FS210 (DN40 ball valve, carbon steel with SAE FS210 flange).

For AISI 316 material, add the letter I at the end of the code.

For Viton seals, add the letter V at the end of the code.

If another type of ball valve not listed in this catalog is required, please contact our technical department.

MKHP AS160



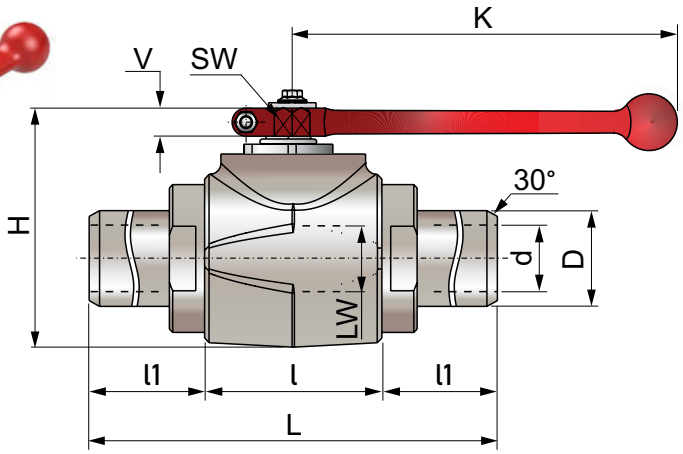

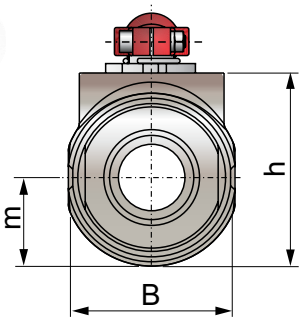

MHA ZENTGRAF
Flow Control Technology

MKHP AS 160

Type	DN	LW	L	l	B	H	h	m	V	SW	K	d	D	PN bar	Weight / Kg
MKHP420 DN32 AS160	32	30	260	80	81	107	86	40,5	16,5	17	320	32,5	42,2	160	4,2
MKHP420 DN40 AS160	40	38	270	85	100	124	103	50	16,5	17	320	39,3	48,3	160	6,3
MKHP420 DN50 AS160	50	48	300	100	118	138	117	59	16,5	17	320	50	60,3	160	10,9

Coding Example:

MKHP420 DN40 AS160 (DN40 ball valve, AS160 carbon steel for welding).

For AISI 316 material, add the letter I at the end of the code.

For Viton seals, add the letter V at the end of the code.

If another type of ball valve not listed in this catalog is required, please contact our technical department.

MKHP SW



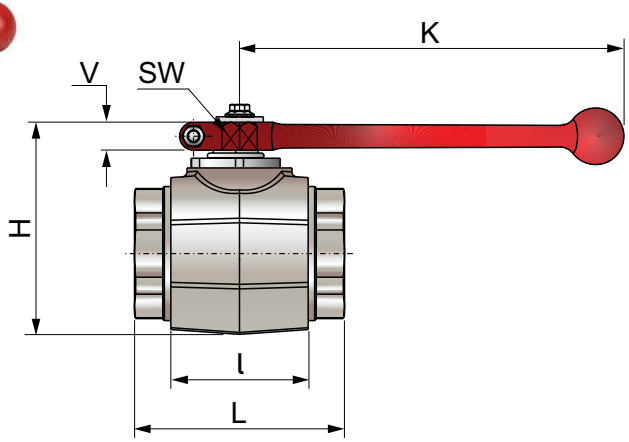

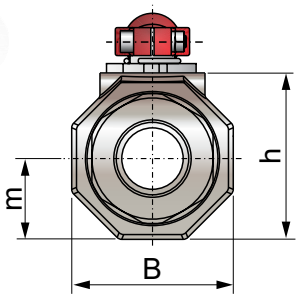

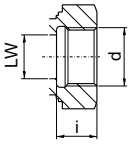

MHA ZENTGRAF
Flow Control Technology

MKHP SW - SW Welding Fitting - ASME B16.11

Type	DN	LW	L	l	B	H	h	m	V	SW	K	i	d	PN bar	Weight / Kg
MKHP420 DN32 SW 1.1/4	32	32	111	80	81	107	86	40,5	16,5	17	320	12,5	42,9	420	3,5
MKHP420 DN40 SW 1.1/2	40	38	130	85	100	124	103	50	16,5	17	320	12,5	49	420	5,7
MKHP420 DN50 SW 2	50	48	140	100	118	138	117	59	16,5	17	320	16	61,4	420	8,2

Coding Example:

MKHP420 DN50 SW2 (DN50 ball valve, carbon steel for socket weld, SW ASME B16.11).

For AISI 316 material, add the letter I at the end of the code.

For Viton seals, add the letter V at the end of the code.

If another type of ball valve not listed in this catalog is required, please contact our technical department.

MKH Ball Valve for Panel Mount



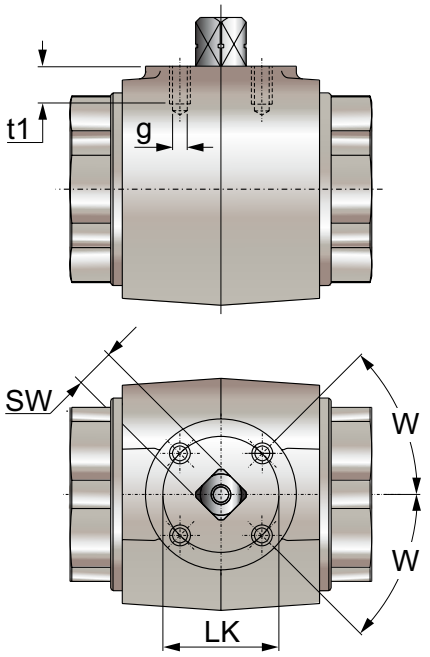

MHA ZENTGRAF
Flow Control Technology

Mounting Threads According to ISO 5211						
DN	SW	LK	g	t1	W	ISO 5211
32	17	50	M6	8	45°	F05
40	17	50	M6	8	45°	F05
50	17	50	M6	8	45°	F05

Ball valve with padlock locking device.



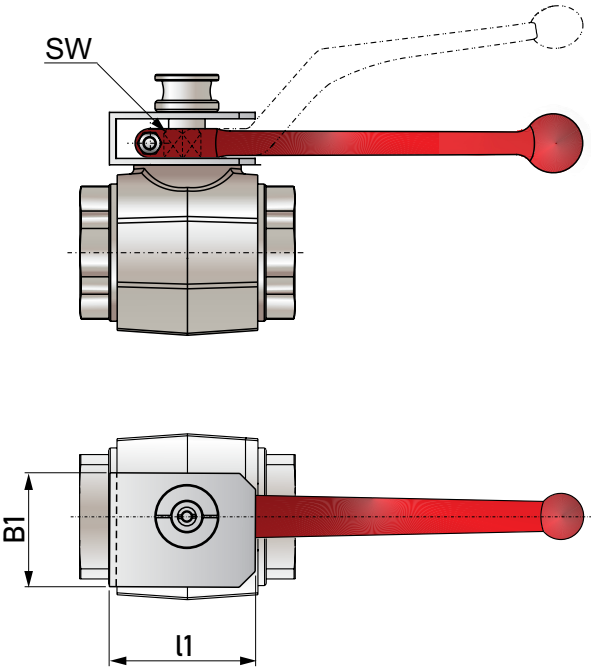

MHA ZENTGRAF
Flow Control Technology

Dimensions			
DN	SW	B1	l1
4-13	9	25	33
16	12	40	50
20-25	14	40	56
32-50	17	50	64

Universal locking device
Suitable for retrofit
Cannot be disassembled when locked
High protection against tampering and disassembly
Bent handle included in delivery

The assembly kits are valid for												
TIPO	BKH / BKHP500	MKHP420 AÇO	BKH-AS	MKHP-AS AÇO	BKH / BKHP-SAEFS	MKHP-SAEFS AÇO	BKH / BKHP-SAE	MKHP-SAE AÇO	BK3 / BK3-S	3KH	PKH	BKHP800	MKHP800

Coding Example:

MKHP420 DN50 SW2 LD (DN50 ball valve, carbon steel for socket weld SW ASME B16.11) padlock locking device.

To add a padlock locking device, add the letters LD to the end of the code.

Ball Valve with Mechanical Limit Switch

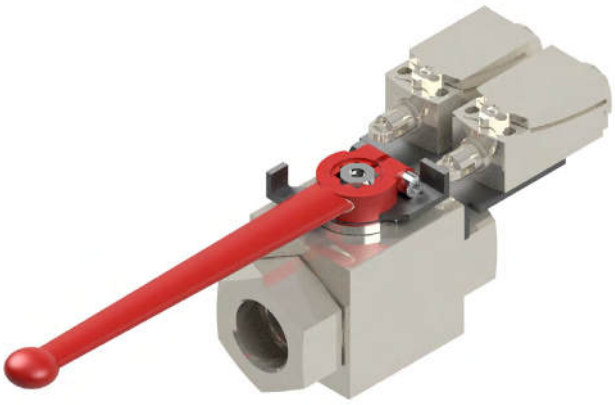

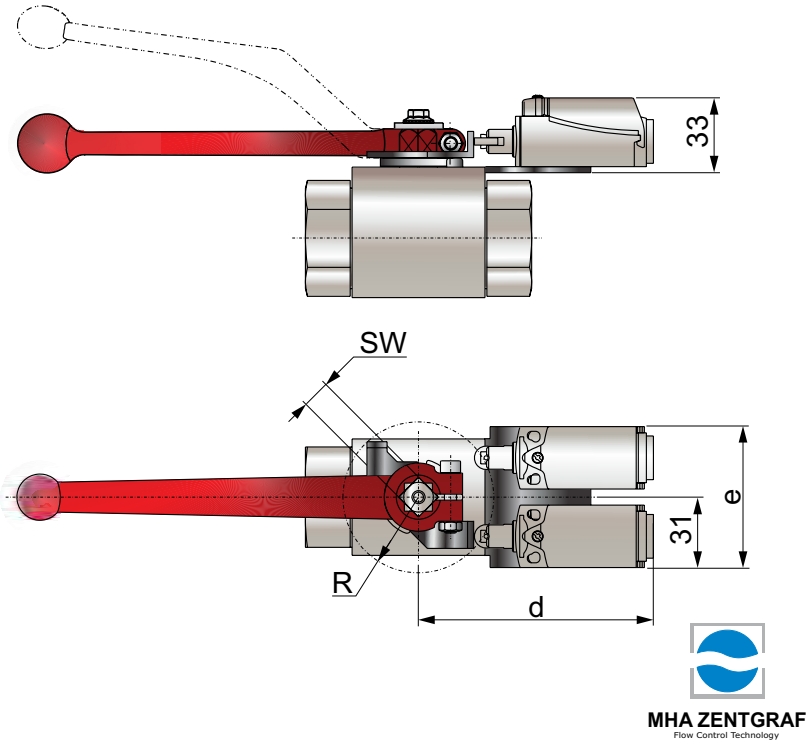

Dimensions				
DN	SW	d	e	R
4-8	9	102	60	32
10	9	102	60	32
13	9	102	60	32
20	14	106	70	37,5
25	14	106	70	37,5
32-50	17	114	85	49

Mechanical limit switch properties
Housing material: Glass fiber reinforced thermoplastic
Protection type: IP66 according to VDE 470T1
NC / NO contact
Utilization category AC-15, Ue / Ie 240V / 3A
(DC use is also possible)
Cable entry: 1x M20x1.5
Ambient temperature: -30°C / +80°C
Specify the quantity of limit switches when requesting the order.
Standard: one sensor per valve.

The assembly kits are valid for					
TIPO	BKH / BKHP 420	BKH-AS	MKHP420	MKHP-AS	BK3 / BK3-S

Coding Example:

BKH DN13 SW 1/2 LSM (DN13 ball valve, carbon steel for 1/2” weld fitting - ASME B16.11) with mechanical limit switch.

To add a mechanical limit switch, add the letters LSM to the end of the code.

Ball Valve with Inductive Sensor



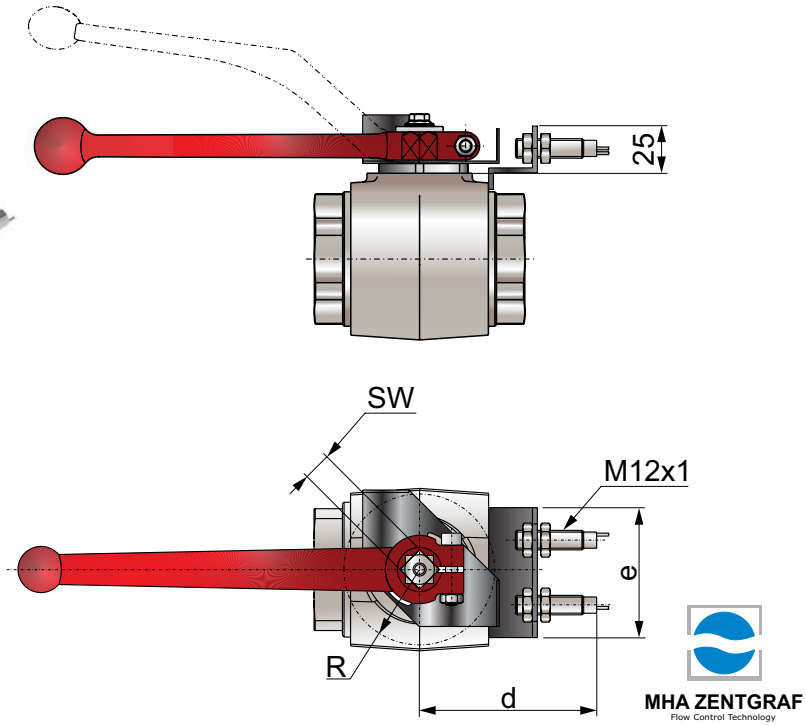

Dimensions				
DN	SW	d	e	R
4-8	9	54	55	32
10	9	54	55	32
13	9	54	55	32
20	14	58	64	37,5
25	14	58	64	37,5
32-50	17	66	80	49

Inductive sensor properties
Housing material: Nickel-plated brass
Active face material: PA 6.6
Mounting: non-flush
Proximity sensor according to NAMUR (DIN EN 60947-5-6)
Nominal sensing distance: 4 mm
(switching point 1.5 mA @ Un = 8 V and Ri = 1 kΩ)
Protection class: IP67
Rated voltage: DC 8 V / operating voltage range: DC 5 ... 25 V
Ambient temperature: -25 °C / +70 °C
Specify the quantity of limit switches when requesting the order.
Standard: one sensor per valve.

The assembly kits are valid for					
TIPO	BKH / BKHP 420	BKH-AS	MKHP420	MKHP-AS	BK3 / BK3-S

Coding Example:

MKHP420 DN50 SW2 IPS (DN50 ball valve, carbon steel for socket weld SW ASME B16.11) with inductive sensors.

To add inductive sensors, add the letters IPS to the end of the code.

Ball Valve with Pneumatic Actuator



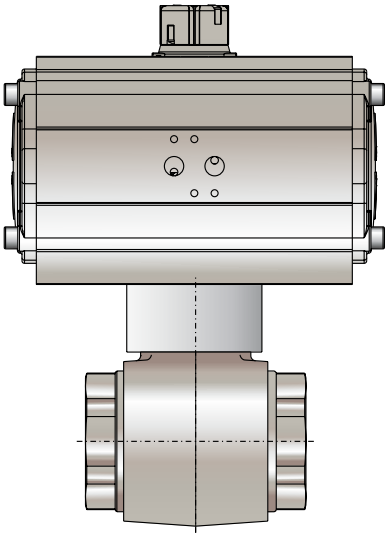

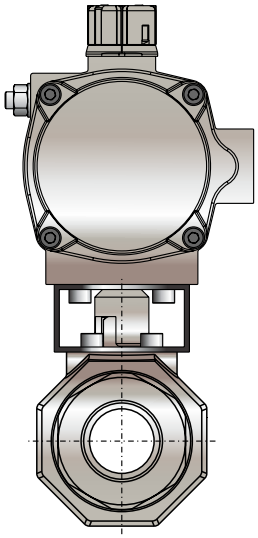

MHA ZENTGRAF
Flow Control Technology

The sizing of the actuators is based on GEPEF's extensive experience. When making a request, it is absolutely necessary to specify the working pressure, service medium, and operating temperature so that we can configure the actuators for your application.

BK3

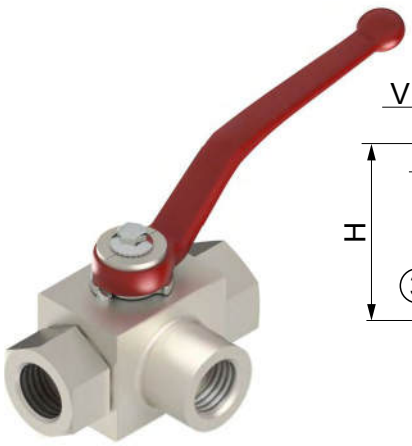

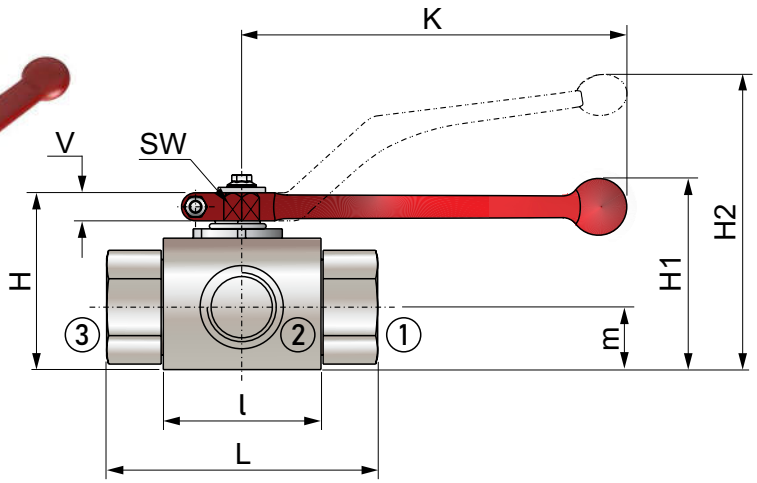

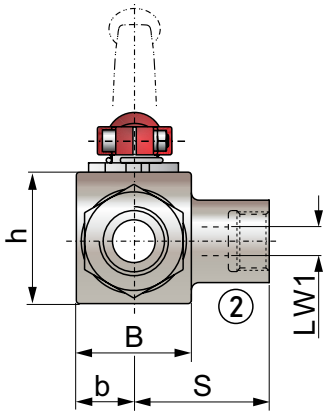

Pressure input only through the central port (port 2)

MHA ZENTGRAF
Flow Control Technology

BK3

Type	l	b	B	H	h	m	V	SW	K	H1	H2	Lever
BK3-DN6	40	13	29	47	33	13,5	11	9	115	-	82	Zn
BK3-DN8	40	13	29	47	33	13,5	11	9	115	-	82	Zn
BK3-DN10	43	16	35	52	38	17,5	11	9	115	-	86	Zn
BK3-DN13	48	17,5	38	54	40	19	11	9	115	-	89	Zn
BK3-DN20	62	24,5	52	75	57	24,5	14	14	200	79	-	Zn
BK3-DN25	66	29	61	83	65	29,5	14	14	200	87	-	Zn
BK3-DN32	81	39	-	106	84,5	39	16,5	17	320	115	-	Al
BK3-DN40	104	53	-	127	106	53	16,5	17	320	136	-	Al
BK3-DN50	118	58	116	137	116	58	16,5	17	320	146	-	Al

Thread
Female Thread DIN ISO 228

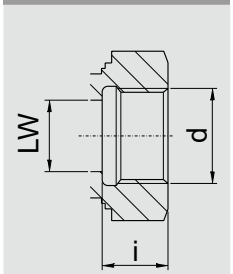

Dimensions								
Type	LW	L	S	LW1	i	d	PN (bar)	Weight / kg
BK3-DN6-G1/4	6	69	34,5	6	14	G1/4	500	0,46
BK3-DN10-G3/8	10	72	36	10	14	G3/8	500	0,60
BK3-DN13-G1/2	13	83	41,5	13	16,3	G1/2	500	0,70
BK3-DN13-G5/8	13	83	41,5	13	16	G5/8	500	0,70
BK3-DN20-G3/4	20	95	47,5	20	18	G3/4	315	1,80
BK3-DN25-G1	25	113	56,5	25	20	G1	315	2,40
BK3-DN32-G1 1/4	30	111	55	30	22	G1 1/4	350	4,80
BK3-DN40-G1 1/2	38	130	65	38	24	G1 1/2	350	8,90
BK3-DN50-G2	48	150	75	48	26	G2	350	12,40

BK3 - Ports

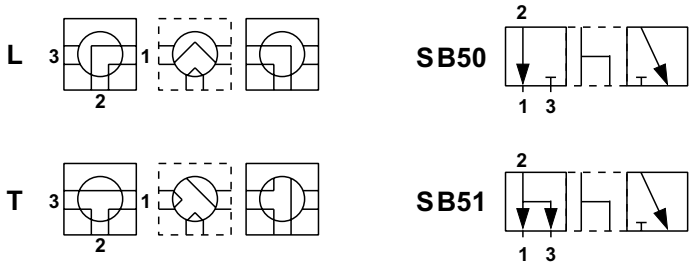

Pressure input only through the central port (port 2)

BK3 - Flow Rate Graph

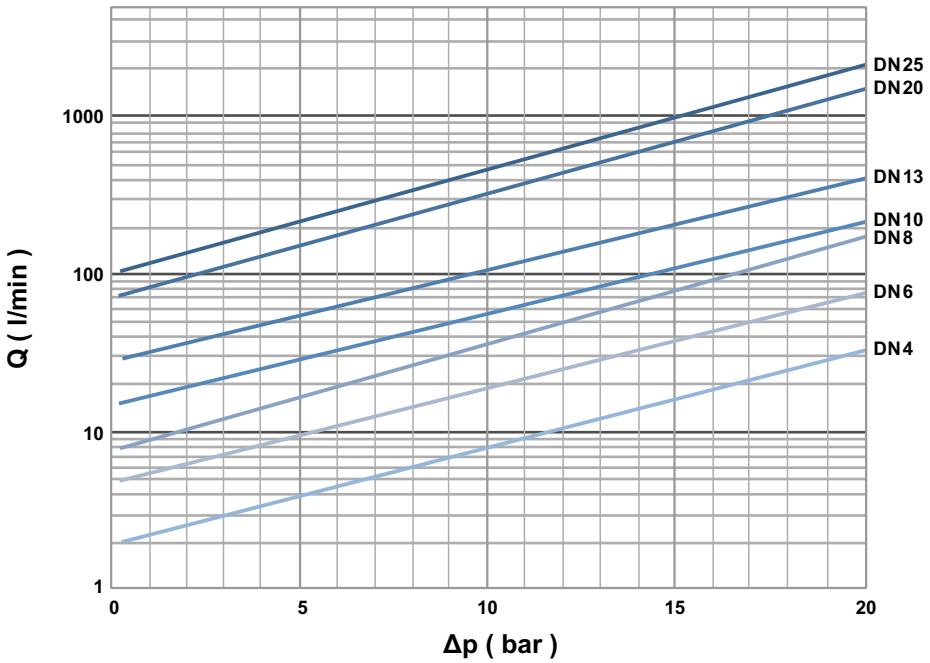

BK3 - Threads

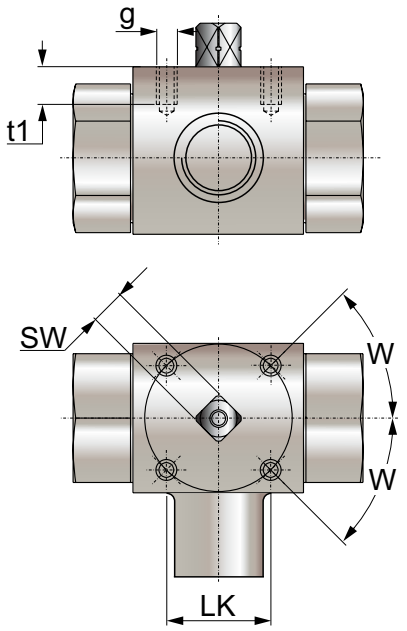

MHA ZENTGRAF
Flow Control Technology

Mounting Threads According to ISO 5211						
DN	SW	LK	g	t1	w	ISO 5211
6	9	36	M5	6	30°*	(F03)*
10	9	36	M5	7	45°	F03
13	9	36	M5	6	45°	F03
20	14	50	M6	10	45°	F05
25	14	50	M6	10	45°	F05
25/32	14	50	M6	10	45°	F05
25/40	14	50	M6	10	45°	F05

*30° Does not correspond to ISO 5211 standard.

Coding Example:

BK3-DN20 G3/4 BSP (3-way ball valve DN20, carbon steel with G3/4 female thread).

For AISI 316 material, add the letter I at the end of the code.

For Viton seals, add the letter V at the end of the code.

If another type of ball valve not listed in this catalog is required, please contact our technical department.

BK3-S

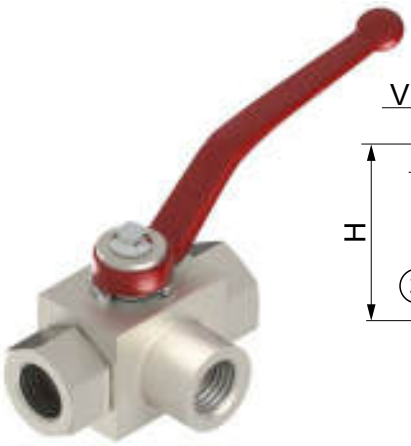

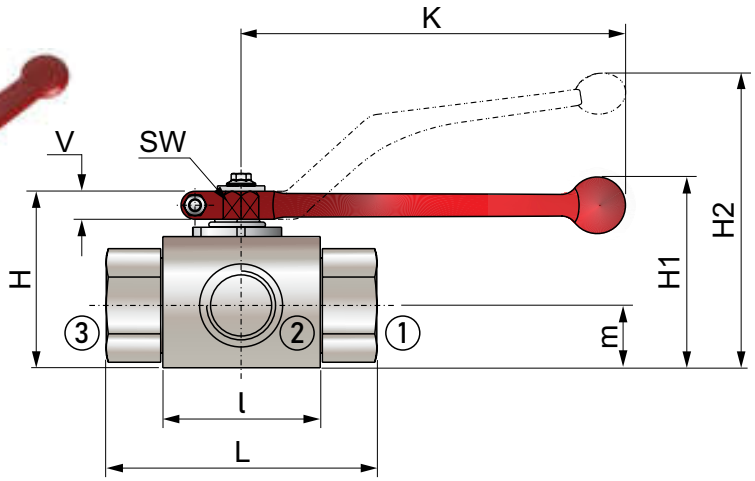

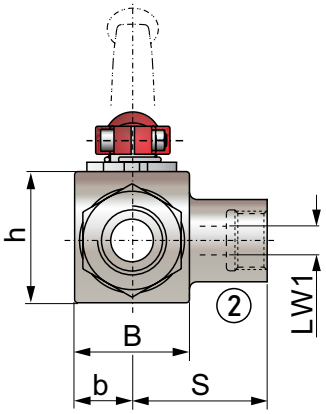

Pressure input possible on all ports.

MHA ZENTGRAF
Flow Control Technology

BK3-S												
Type	l	b	B	H	h	m	V	SW	K	H1	H2	Lever
BK3-S-DN6	40	13	29	47	33	13,5	11	9	115	-	82	Zn
BK3-S-DN8	40	13	29	47	33	13,5	11	9	115	-	82	Zn
BK3-S-DN10	43	16	35	52	38	17,5	11	9	115	-	86	Zn
BK3-S-DN13	48	17,5	38	54	40	19	11	9	115	-	89	Zn
BK3-S-DN20	62	24,5	52	75	57	24,5	14	14	200	79	-	Zn
BK3-S-DN25	66	29	61	83	65	29,5	14	14	200	87	-	Zn
BK3-S-DN32	81	39	-	106	84,5	39	16,5	17	320	115	-	Al
BK3-S-DN40	104	53	-	127	106	53	16,5	17	320	136	-	Al
BK3-S-DN50	118	58	116	137	116	58	16,5	17	320	146	-	Al

BK3-S

Thread
Female Thread DIN ISO 228

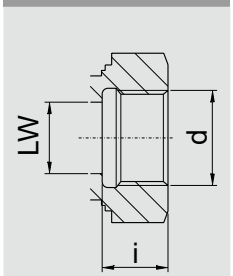

Dimensions								
Type	LW	L	S	LW1	i	d	PN (bar)	Weight / kg
BK3-S-DN6-G1/4	6	69	34,5	6	14	G1/4	500	0,46
BK3-S-DN10-G3/8	10	72	36	10	14	G3/8	500	0,60
BK3-S-DN13-G1/2	13	83	41,5	13	16,3	G1/2	500	0,70
BK3-S-DN13-G5/8	13	83	41,5	13	16	G5/8	500	0,70
BK3-S-DN20-G3/4	20	95	47,5	20	18	G3/4	315	1,80
BK3-S-DN25-G1	25	113	56,5	25	20	G1	315	2,40
BK3-S-DN32-G1 1/4	30	111	55	30	22	G1 1/4	350	4,80
BK3-S-DN40-G1 1/2	38	130	65	38	24	G1 1/2	350	8,90
BK3-S-DN50-G2	48	150	75	48	26	G2	350	12,40

BK3-S - Ports

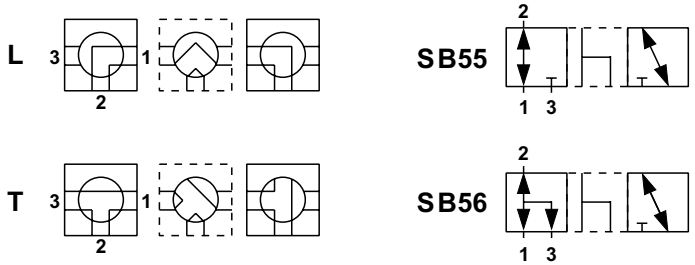

Pressure inlet possible at all ports
Must only be operated at ΔP = 0 bar

BK3-S - Flow Rate Graph

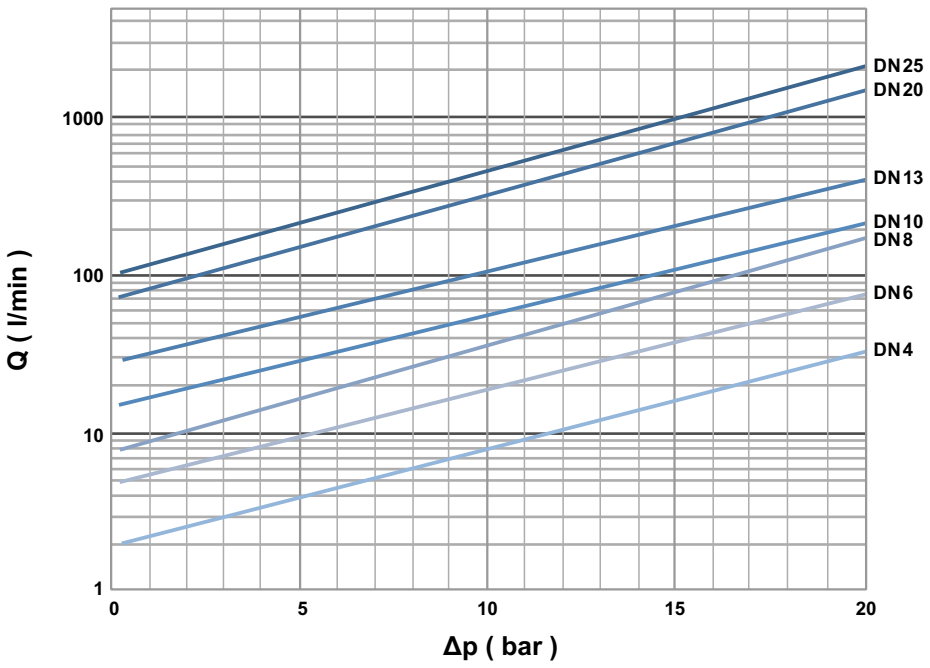

Ball valve sealing variations

3-way selector ball valve, type BK3

The selector ball valve has 2 seats and a floating ball.
If the shut-off port is pressurized and p1 is higher than p2, the
ball is being forced against the opposite sealing element. A gap
forms and the ball valve is leaking.

Pressure inlet only from center port!

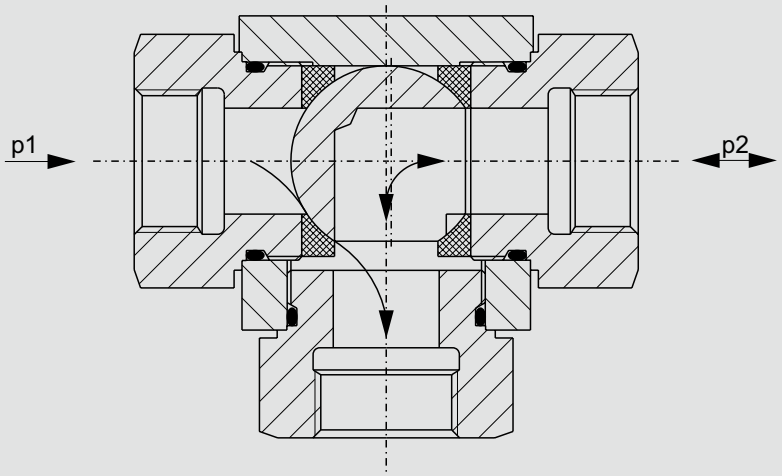

3-way selector ball valve, type BK3-S

The selector ball valve has 2 front side sealing seats and a
floating ball.

p1 > p2

Due to the forming of the ring surface ‚f1' and the pressure (p1
p2) the left sealing element will be forced against the ball and
consequently the sealing is achieved. The ‚floating' ball moves
against the right sealing surface - the ball valve remains sealed.

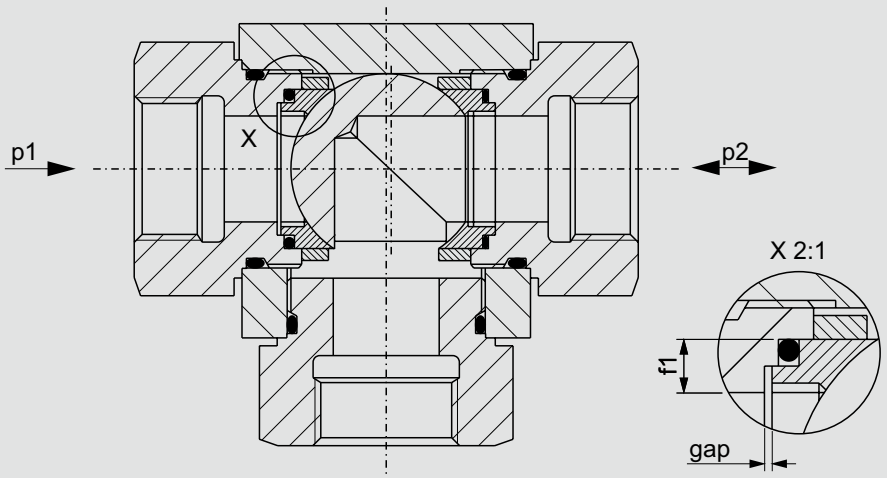

p1 > p2

Due to the ring surface ‚f2' and the pressure (p2-p1) the right
sealing element will also be forced against the ball and con
sequently the sealing is achieved. The ‚floating' ball moves
against the left sealing surface - the ball valve remains sealed.

Pressure inlet possible from all ports!
Must be operated only at ΔP=0bar!

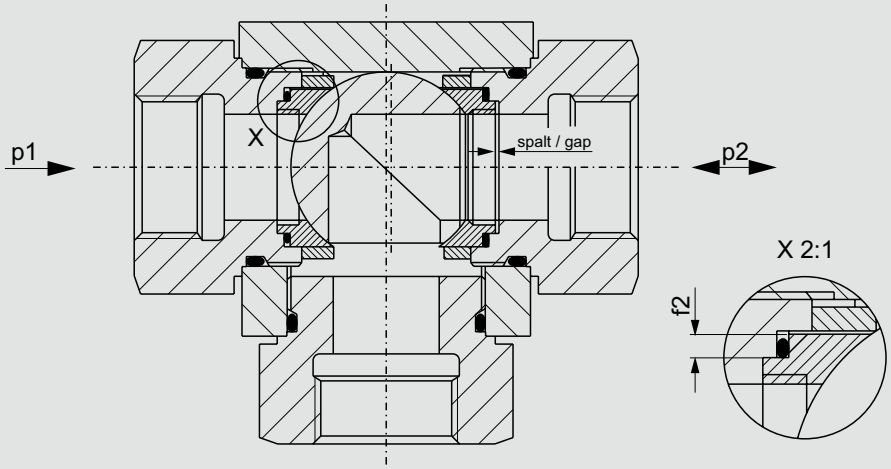

High Pressure Ball Valve

BKHP800



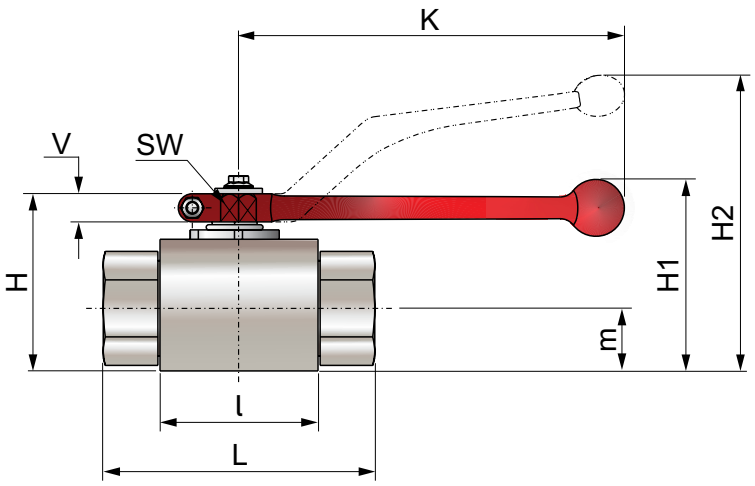

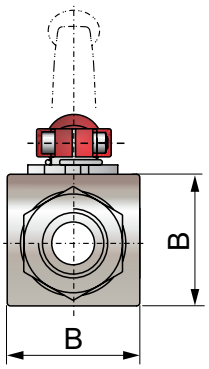

MHA ZENTGRAF
Flow Control Technology

BKHP800									
Type	l	B	H	m	V	SW	K	H2	Lever
BKHP800-DN4	76	50	64	25	11	9	115	101	Steel
BKHP800-DN6	76	50	64	25	11	9	115	101	Steel
BKHP800-DN8	76	50	64	25	11	9	115	101	Steel
BKHP800-DN10	76	50	64	25	11	9	115	101	Steel
BKHP800-DN13	76	50	64	25	11	9	115	101	Steel
BKHP800-DN20	111	90	108	45	14	14	171	159	Steel
BKHP800-DN25	111	90	108	45	14	14	171	159	Steel

Coding Example:

BKHP800-DN10 (High-pressure ball valve).

For AISI 316 material, add the letter I at the end of the code.

For Viton seals, add the letter V at the end of the code.

If another type of ball valve not listed in this catalog is required, please contact our technical department.

BKHP800

Thread
Male Thread DIN 2353

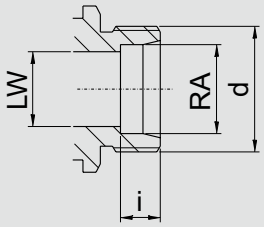

Dimensions							
Type	LW	RA	L	i	d	PN (bar)	Weight / kg
BKHP800-DN4-8S	5	8	110	7	M16x1,5	800	1,60
BKHP800-DN6-10S	6	10	114	7,5	M18x1,5	800	1,60
BKHP800-DN8-12S	8	12	114	7,5	M20x1,5	800	1,64
BKHP800-DN10-14S	13	14	114	8	M22x1,5	800	1,56
BKHP800-DN13-16S	13	16	114	8,5	M24x1,5	800	1,58
BKHP800-DN13-20S	13	20	118	10,5	M30x2	800	1,63
BKHP800-DN20-25S	20	25	162	12	M36x2	800	7,31
BKHP800-DN25-30S	25	30	166	13,5	M42x2		7,40

Thread
Female Thread ANSI B1.20.1 NPT

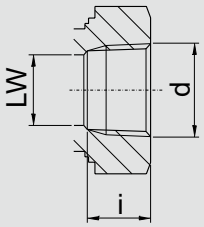

Dimensions						
Type	LW	L	i	d	PN (bar)	Weight / kg
BKHP800-DN6-1/4 NPT	6	130	13,7	1/4 NPT	800	1,92
BKHP800-DN10-3/8 NPT	13	130	13,5	3/8 NPT	800	1,85
BKHP800-DN13-1/2 NPT	13	130	17	1/2 NPT	800	1,79
BKHP800-DN20-3/4 NPT	20	161	18,3	3/4 NPT	800	7,83
BKHP800-DN25-1 NPT	25	164	21,6	1 NPT	800	7,68

H_2 Ready



HYDROGEN VALVE

gepef

Hydrogen Valve

HYDROGEN VALVE



H_2 Ready

In the future, hydrogen will make a signi ficant contribution to sustainability and environmental protection. For example, in e-mobility as an alternative fuel in fuel cells or in the production of green steel.

With years of experience in the gas sec tor, **MHA** ZENTGRAF has developed ball valves and flow control solutions for the complete hydrogen process chain: Hydrogen generation, transport and mo bile pipelines as well as compression and dispenser stations. Pressure ratings up to 1000 bar are realized



HYDROGEN VALVE



Flow control solutions across the H_2 process chain

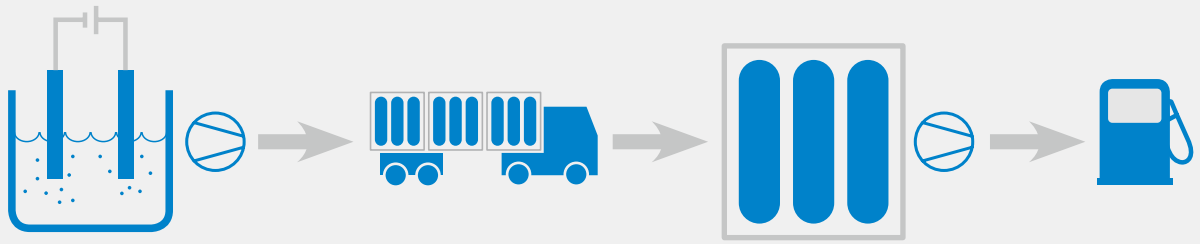

Hydrogen production, compression and storage

Transportation e.g. category 3 and 4 containers
(up to 650 bar @ +85 °C)

Fuel station storage and compression

Truck refueling 350 bar
(500 bar storage)

Car refueling 700 bar
(1034 bar storage)

Our products can be used in the complete hydrogen process chain - hydrogen generation, transport and mobile pipelines as well as compression and refueling stations. We also pay attention to your specific application conditions to offer you the technically and economically best solution.

MHA valves - Design features ...

Size reduction

Ball valves have a significant ad vantage compared to other types of valves:
Full flow cross section in open posi tion! A DN13 (½“) ball valve has a Cv value of 22 gal/min. This Cv value can only be reached with sizes of approx. DN32 (1 ¼“) at other valve types, e.g. globe or needle valves. In addition, ball valves can be used to achieve a high degree of leakage free closure.

Metallic materials

- Due to its high resistance against hydrogen embrittlement, 316-Series stainless steels (1.4404, 1.4571) are used whenever possible.
- If higher material strength is required, e.g. for stems, balls or trunnions, high strength austenitic stainless steels with particular resistance to strain-induced phase transformations, such as A286 (1.4980) and Nitronic-50®, are used. Du plex or martensitic grades are avoided.



Temperature range

- Materials suitable for temperatures from -40 °C up to +140 °C
- Temperature range acc. ISO 19880-3 is specified as -40 °C / +85 °C

Pressure testing

- Pressure testing acc. DIN EN 12266-1 and DIN EN 14246 with test gas (nitrogen + helium)
- Static and Cyclic high pressure gas testing with air (≤ 550 bar) or nitrogen (up to 1000 bar) in the temperature range from -40 °C to + 85 °C
- Valve endurance tests acc. to ISO 19880-3 and ISO 23826 (actuation at full ΔP, -40 °C ≤ T ≤ +85 °C) carried out inhouse during development and on customer request

Leakage

Internal and external leakage acc. DIN EN 12266 leakage rate A and the TPED standard for ball valves, ISO 23826.
Low emission according to DIN EN ISO 15848-1.

Lubricants and cleaning

- Oil and grease free products through ultrasonic cleaning
- Assembly of valves without additional lubrication at all wetted surfaces

Sealing materials

- All sealing materials chosen to prevent damages through explosive decompression (e.g. NORSOK M-710)
- Sealing materials acc. DIN EN ISO 11114-2 for hydrogen usage
- Special attention is paid to low temperature seal performance

... and certified performance

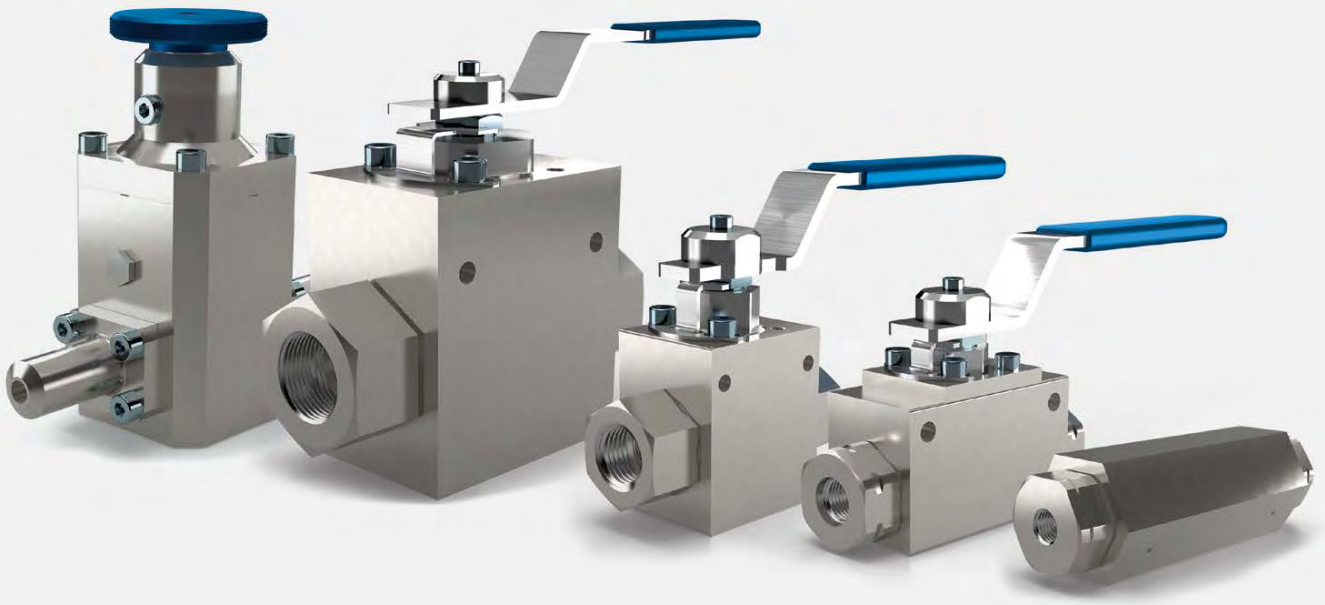

TPED

- Ball Valve HFKH650 certified according ISO 23826 (BAM)
- Spindle Valve HFSV600 certified according ISO 10297 (TÜV)

Functional Safety (SIL)

Automatically actuated valves suitable for use in SIL 2 safety instrumented systems (IEC 61508 / ISO 13849-1)

ATEX

Compliant for category IIC, Ex-zone 1, 2G

Fire-safe

Approved according DIN EN ISO 10497

Low emission & technical leak tightness

- Readjustable packing
- High pressure gas test for internal and external leakage
- Shaft sealing design is certified according to DIN EN ISO 15848-1

Materials for hydrogen safety

- All materials are resistant to hydrogen embrittlement (acc. ISO 11114-1/2)
- All sealing materials are selected for explosive decompression resistance (AED)
- EN 10204 3.1 material certificate for all pressurized parts

Hydrogen production

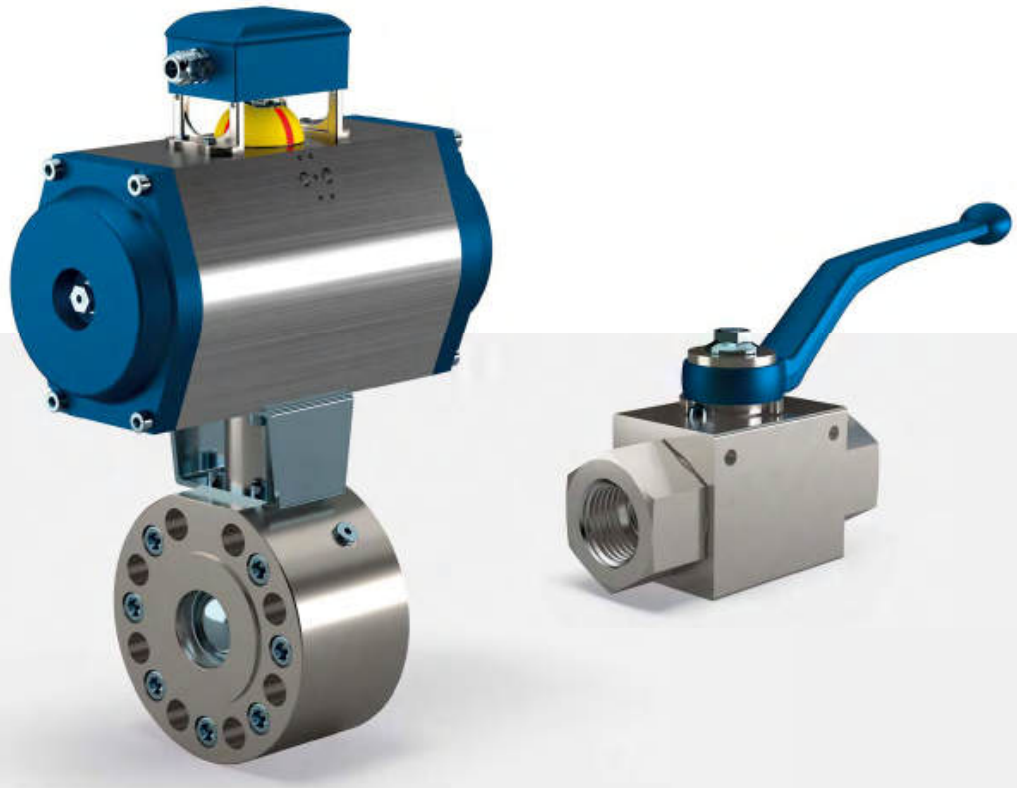

H_2 production

This application includes systems e.g. for electrolysis or power-to-gas systems. Of course, ball valves from **MHA** ZENTGRAF can also be used at these lower pressure applications.

Larger nominal widths of up to 4“ can also be offered to ensure maximum flow capacity. A leakage rate A according to DIN EN 12266 is guaranteed even at larger nominal diameters.

Our valves are available with either threaded or flange connection according your spe cification. On request accessories like limit switches, locking devices or fully automated valves are available.

Transport, storage & refueling systems



HFKH500

Hydrogen applications up to 500 bar

Gas transport and refueling applications set higher requirements for ball valves. At 350 bar refueling, system pressures up to 500 bar occur during compression and storage. Considering the temperature influence, a Type 3 Technology Cylinder for example is designed for system pressures of approximately 480 bar. During transport, vibrations and weather influences can put heavy strain on the system equipment. Additionally, valves for such kind of applications are actuated more frequently because filling and drain processes are carried out regularly.

For use as a maintenance valve, with occasional operations, we recommend our proven ball valves with gas seat system using hydrogen-compatible materials according to the guidline ISO 11114.

For higher operating frequencies up to 500 bar, we offer our new HFKH500. These ball valves are designed for switching under full differential pressure and, on request, can be supplied as complete units with assembled and tested actuators, making them suitable for use in SIL 2 applications.
Our HFKH500 ball valves already meet the endurance requirements of the new ISO 23826, are ATEX IIC (H_2), Ex Zone 1, 2G compliant, and are certified according to DIN EN ISO 15848-1 (low emission).

Transport, storage & refueling systems

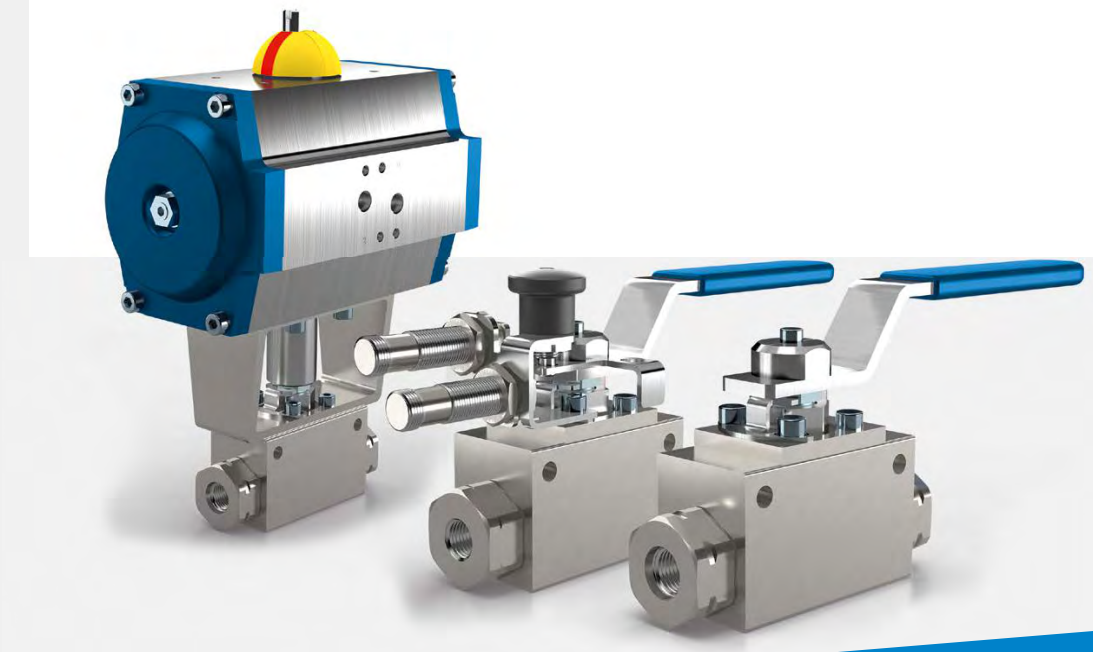

TPED, Fire-safe, SIL, ATEX, Low emission

HFKH650

Hydrogen applications up to 650 bar

Higher compression of hydrogen during transport and storage improves the efficiency of the systems, saves installation space and, last but not least, reduces costs. Considering the temperature influence, state of the art Type 4 Technology Cylinders are designed for pres sures up to 650 bar.

With the new HFKH650 ball valve, **MHA** provides a reliable solution for these demanding applications. Its torque-optimized design ensures smooth manual operation, even under full differential pressure.

The HFKH650 series is certified according to TPED (ISO 23826), ATEX IIC (H_2) Ex Zone 1, 2G, Fire-safe DIN EN ISO 10497, and DIN EN ISO 15848-1 (low emission). In combination with suitable pneumatic actuators, these valves are also qualified for use in SIL 2 applications.

Hydrogen dispenser stations

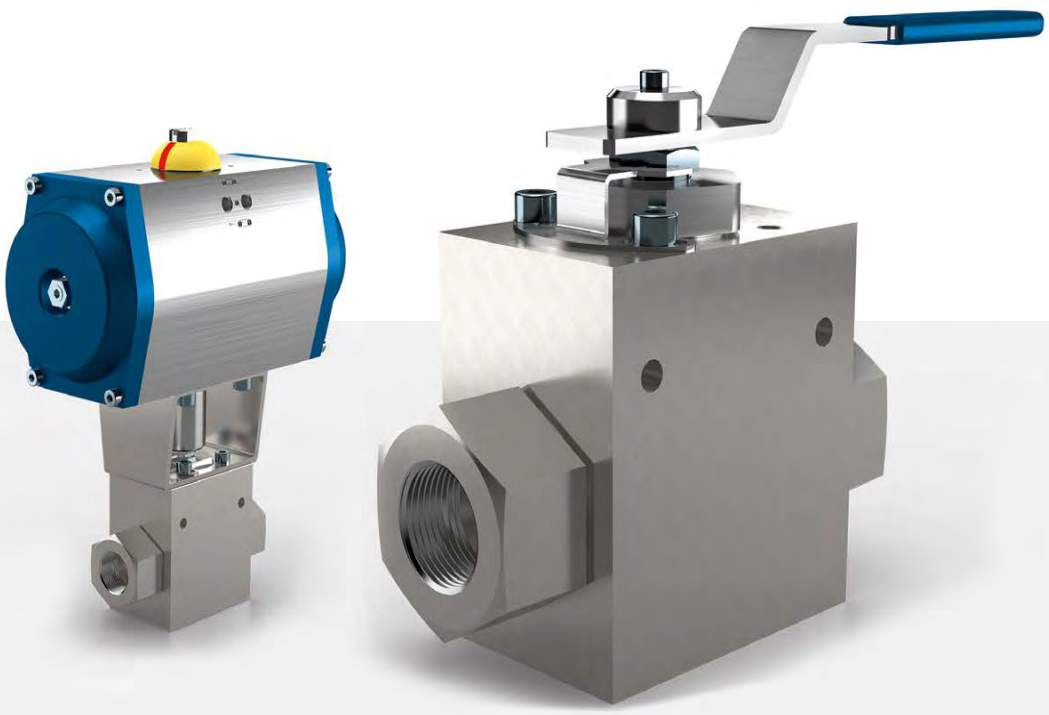

HFKH1000

H_2 refueling at pressures up to 1034 bar

At 700 bar refueling of passenger cars, hydrogen is compressed and stored at pressures up to 1034 bar. Latest developments reveal a tendency to 700 bar technology also for commercial vehicles such as trucks and busses.

ISO 19880-3 Standard (Gaseous Hydrogen – Refueling Stations – Part 3: Valves) differs between valves for maintenance (Class B) and operation (Class A) purpose. While Class B Valves are only meant to withstand 100 cycles of operation at room temperature, Class A Valves shall withstand 102000 cycles (100000 at RT, 1000 at -40 °C and another 1000 at +85 °C) without losing integ rity of the seal system. **MHA** aims to qualify its HFKH1000 valve acc. to ISO 19880-3, Class A. Additionally, the shaft sealing design is certified according to DIN EN ISO 15848-1 (low emission).

To enable up to 102000 actuations under full differential pressure, the HFKH1000 trunnion valve was designed with special attention to reduced wear and friction. This ensures a maximal level of reliability and sustainability even under harshest conditions. This ball valve can be used for ATEX-relevant applications as it is approved for ATEX IIC (H2) Ex-zone 1, 2G. Combined with our actuators, the HFKH1000 is suitable for use in SIL 2 applications.

Check valves for hydrogen transport, storage & refueling

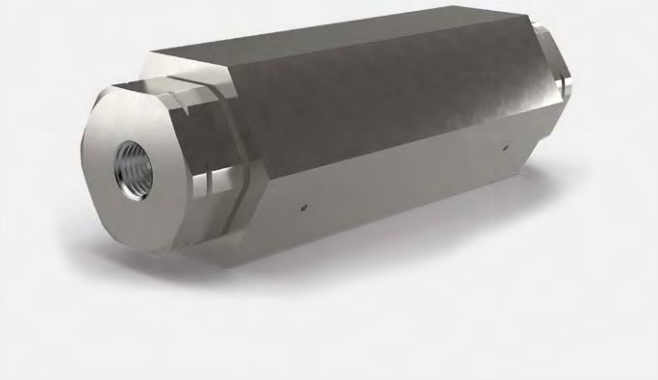

RVH2

H_2 transport, storage and refueling up to 1034 bar

Hydrogen transport, storage and refueling applications set high requirements for check valves. At 700 bar refueling of passenger cars, hydrogen is compressed and stored at pressures up to 1000 bar and temperatures as low as -40°C.

The check valve RVH2 is specifically designed to fulfil all requirements for hydrogen applica tions. We offer different cracking pressures to customize the best possible product for your ap plication.

The RVH2 is also available with a 0.6 mm bleed hole for safe residual pressure measurement.

The new check valve series already meets the endurance requirements of the new ISO 23826 and ATEX IIC (H2), Ex-zone 1, 2G.

Spindle valves for hydrogen transport, storage & refueling



NEW: **HFDV600**
Flow control spindle valve with metallic seals

HFSV600

Hydrogen applications up to 600 bar

The spindle valve is the ideal solution for demanding industrial hydrogen applications up to 600 bar, where safety and reliability are paramount.

The spindle mechanism allows for slow opening, minimizing pressure surges and ensuring smooth system operation. The adjustable double-layer stem sealing system with high-quality seals and optimized flange connections provide maximum safety and leak free operation even under extreme conditions (-40°C / +85°C).

The HFSV600 is certified according to TPED ISO 10297, making it suitable for use in hydrogen MEGCs. It is also ATEX II C (H_2) certified for Ex-zone 1, 2G and designed for low-emission ope ration.

With metallic sealing, it can also be configurated as a flow control valve (HFDV) to precisely regulate and limit gas flow.

The right product for your hydrogen application

HFSV600 – Spindle Valve



- DN11
- PN: 600 bar
- Bi-directional
- ATEX, TPED, Low emission design

HFKH500 – Ball Valve



- DN8 (3/8“), DN13 (1/2“), DN25 (1“)
- Floating ball
- PN: 500 bar
- ATEX, SIL, Low emission

H2F1-1000 – Filter



- DN8 (3/8“)
- PN: 1000 bar
- Volume: 0,15 dm³
- Micron rating: 20 µm (others on request)

RVH2 – Check Valve



- DN8 (3/8“), DN13 (1/2“)
- Check valve
- PN: 1034 bar
- ATEX

HYDROGEN VALVE

All valves designed for high frequent actuation at -40°C to +85°C

HFKH650 – Ball Valve



- DN8 (3/8“), DN13 (1/2“), DN25 (1“)
- Floating ball
- PN: 650 bar
- ATEX, SIL, Fire-safe, TPED (Dn8), Low emission

HFKH1000 – Ball Valve



- DN8 (3/8“), DN13 (1/2“)
- Trunnion ball
- PN: 1034 bar
- ATEX, SIL, Low emission

DSB-HFKH650 – Double Safety and Bleed Valve



- DN8 (3/8“), DN13 (1/2“), DN25 (1“)
- Floating ball
- PN: 650 bar
- ATEX, SIL, Fire-safe design, Low emission

DSB-HFKH1000 – Double Safety and Bleed Valve

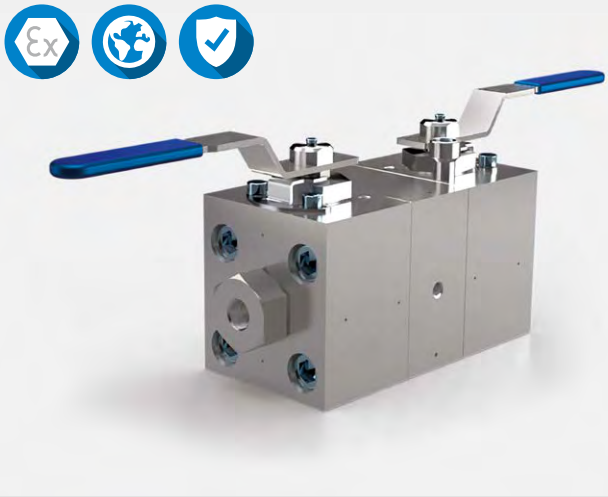

- DN8 (3/8“), DN13 (1/2“)
- Trunnion ball
- PN: 1034 bar
- ATEX, SIL, Low emission

Unique double layer stem sealing cartridge design

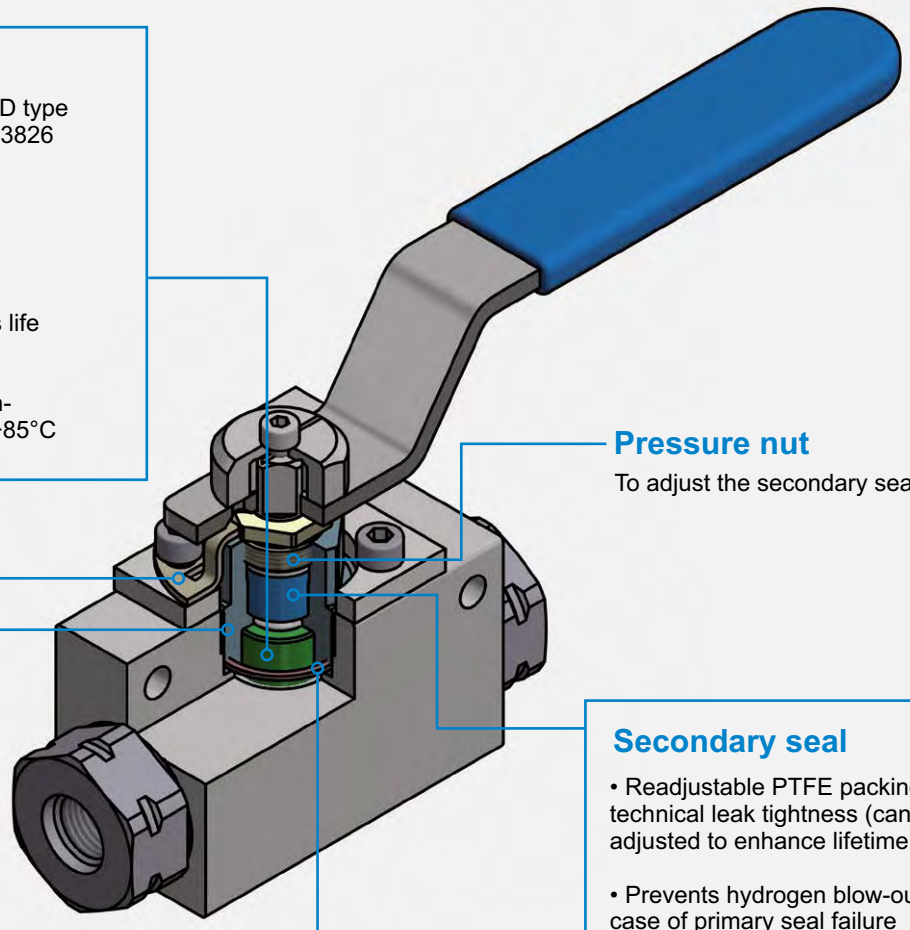

Primary seal

- Special sealing ring for TPED type approval acc. DIN EN ISO 23826
- PEEK bearing to avoid metal-to-metal contact
- Avoids fretting
- Alignment of seals enhances life time and seal performance
- Designed and tested for high-frequent actuation at -40°C/+85°C

Pressure nut

To adjust the secondary seal

Locking plate

To fix the position of the pressure nut

Cartridge

For easy replacement of the complete shaft sealing system

Secondary seal

- Readjustable PTFE packing for technical leak tightness (can be adjusted to enhance lifetime)
- Prevents hydrogen blow-out in case of primary seal failure
- Low emission design with double layer stem sealing
- Additional conductive bearings for ATEX compliance (IIC, Ex-zone 1, 2)

Graphite ring

Seals in case of fire, Fire-safe DIN EN ISO 10497 certified

Wide range of standard and customized accessories and adaptions



Pneumatic actuators

- Single/double acting
- ATEX
- SIL 3

Manifolds & DSBs

- Standard and customised manifold designs
- Double layer stem cartridge
- Needle or ball valve bleed





Position switches & locking devices

- Mechanical and inductive position indication
- Detent for two hand operation
- Locking devices



Panel mounting

- Simple modification for panel installation



Block ball valve
Stainless Steel

HFKH500

H2 Ready

MHA ZENTGRAF
Flow Control Technology

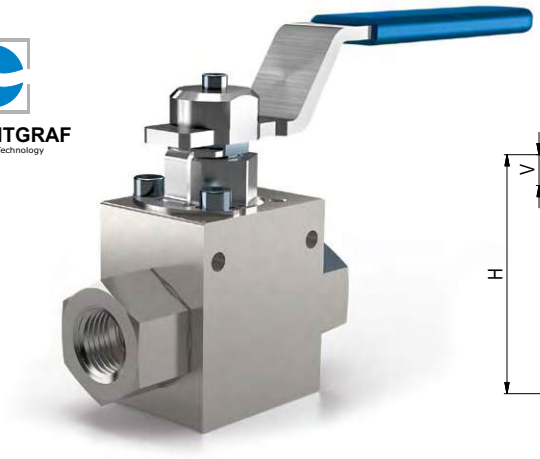

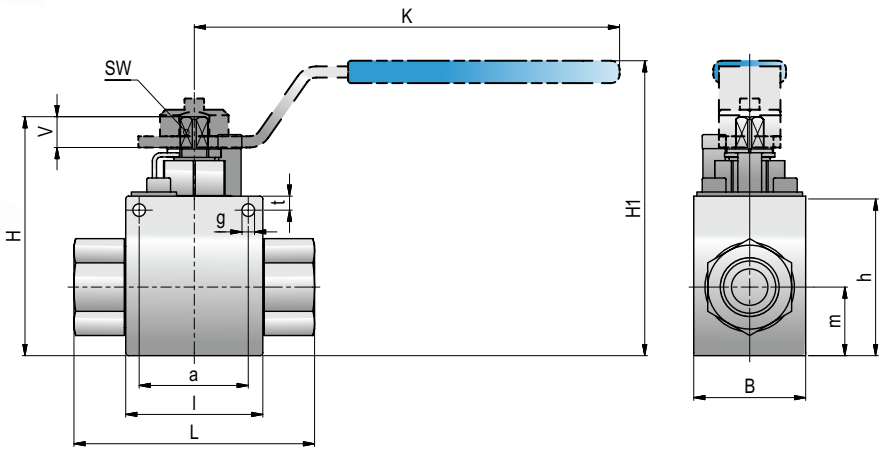

Available

DN8 (3/8“), DN13 (1/2“), DN25 (1“)

Connections

DIN ISO 228 Female thread, ANSI B1.20.1 NPT Female thread, SAE J514/ISO/ DIS11926-1 Female thread, DIN 2353 / ISO 8434-1 Heavy series, others on request

Accessories on request

- Locking devices
- Actuators
- Mounting holes
- Position switches
- Combinations
- Detent

Material code description

Materials	44g8
Body	1.4571
Ball	1.4571 / Nitronic-50®
Stem	Nitronic-50®
Ball seats	Peek
Body and stem sealing	FKM / PTFE*
Tmin / Tmax	-40°C / +85°C*

*Others on request.

Certification

ATEX IIC (H_2), Ex-zone 1, 2G	
DIN EN ISO 15848-1 (low emission)	
SIL 2 (IEC 61508 / ISO 13849-1)	

General dimensions

Type	l	B	H	h	m	Vmin	SW	a	g	t	K	H1	Lever
HFKH500-DN8	42	38	74,5	46	16,5	11	8	35	Ø4,5	11	152	94,5	St
HFKH500-DN13	49	40	85,5	57	24,5	11	8	39	Ø4,5	5	152	105,5	St
HFKH500-DN25	83,5	70	124	93	35	13,5	12	67,5	Ø9	17	202	146,5	St

Connection type: DIN ISO 228 Female thread

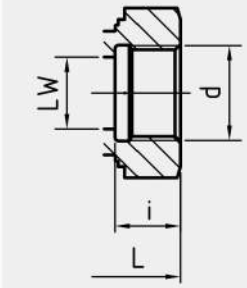

Type	LW	L	i	d	Weight [Kg]	PN [bar]	44g8
HFKH500-DN8-G 1/4	8	69,6	14	G 1/4	0,67	500	76970
HFKH500-DN13-G 1/2	13	86	16,3	G 1/2	1,15	500	76971
HFKH500-DN25-G 1	25	130,7	20	G 1	5,16	500	76972

Connection type: ANSI B1.20.1 NPT Female thread

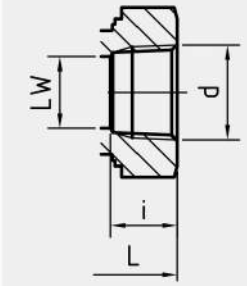

Type	LW	L	i	d	Weight [Kg]	PN [bar]	44g8
HFKH500-DN8/6-1/4" NPT	8	71,6	13,7	1/4" NPT	0,67	500	80226
HFKH500-DN13-1/2" NPT	13	86	17	1/2" NPT	1,16	500	80313
HFKH500-DN25-1" NPT	25	130,7	21,6	1" NPT	5,18	500	on request

Connection type: SAE J514/ISO/DIS11926-1 Female thread

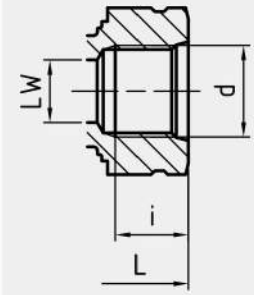

Type	LW	L	i	d	Weight [Kg]	PN [bar]	44g8
HFKH500-DN8-9/16" UNF	8	75,6	13	9/16"-18 UNF	0,73	500	on request
HFKH500-DN13-3/4" UNF	13	86	15	3/4"-16 UNF	1,16	500	on request
HFKH500-DN25-1 5/16" UN	25	130,7	20	1 5/16"-12 UN	5,13	500	on request

Connection type: DIN 2353 / ISO 8434-1 Heavy series

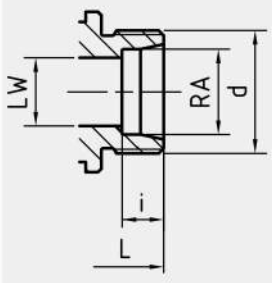

Type	LW	RA	L	i	d	Weight [Kg]	PN [bar]	44g8
HFKH500-DN8-12S	8	12	78,6	7,5	M 20x1,5	0,67	500	on request
HFKH500-DN13/10-14S	10	14	86	8	M 22x1,5	1,15	500	80675
HFKH500-DN13-16S	13	16	89,6	8,5	M 30x2	1,12	500	on request
HFKH500-DN13-20S	13	20	90	10,5	M 30x2	1,20	500	80975
HFKH500-DN25-30S	25	30	137,9	13,5	M 42x2	4,77	500	on request

Please note the pressure ratings of the tube connections!

Block ball valve
Stainless Steel

HFKH650

H2 Ready

MHA ZENTGRAF
Flow Control Technology



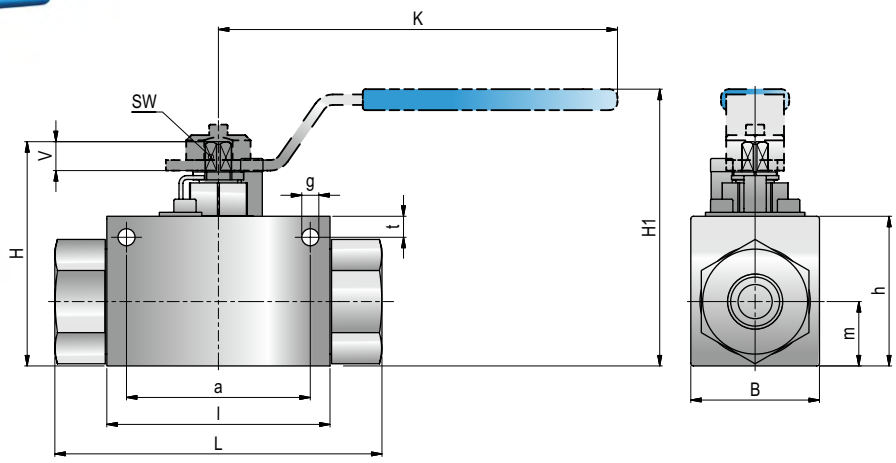

Available sizes

DN8 (3/8“), DN13 (1/2“), DN25 (1“)

Connections

DIN ISO 228 Female thread, ANSI B1.20.1 NPT Female thread, SAE J514/ISO/ DIS11926-1 Female thread, DIN 2353 / ISO 8434-1 Heavy series, C&T Medium Pressure, UNEF Male (double ferrule), others on request

Accessories on request

- Locking devices
- Actuators
- Mounting holes
- Position switches
- Combinations
- Detent

Material code description

Materials	44g8
Body	1.4571
Ball	1.4571 / Nitronic-50®
Stem	Nitronic-50®
Ball seats	Peek
Body and stem sealing	FKM / PTFE*
Tmin /Tmax	-40°C / +85°C*

*Others on request.

Certification

ATEX IIC (H_2), Ex-zone 1, 2G	Ex
Fire-safe DIN EN ISO 10497	
TPED ISO 23826 (for DN8 only)	π
DIN EN ISO 15848-1 (low emission)	
SIL 2 (IEC 61508 / ISO 13849-1)	

General dimensions

Type	l	B	H	h	m	Vmin	SW	a	g	t	K	H1	Lever
HFKH650-DN8	75,5	38	74,5	46	16,5	11	8	60	Ø6,5	8	152	94,5	St
HFKH650-DN13	85	49	85,5	57	24,5	11	8	70	Ø6,5	8	152	105,5	St
HFKH650-DN25	120	78	128,5	97	39	13,5	12	104	Ø9	17	202	151,1	St

Connection type

DIN ISO 228 Female thread

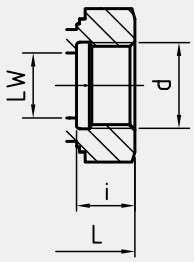

Dimensions

Type	LW	L	i	d	Weight [Kg]
HFKH650-DN8-G 1/4	8	105,1	14	G 1/4	1,34
HFKH650-DN13-G 1/2	13	124,6	16,3	G 1/2	2,35
HFKH650-DN25-G 1	25	159,6	20	G 1	7,83

Order code per Material combination

PN [bar]	44g8
650	on request
650	on request
650	on request

Connection type / Dimensions / Order code per Material combination

ANSI B1.20.1 NPT Female thread

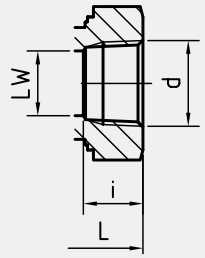

Type	LW	L	i	d	Weight [Kg]	PN [bar]	44g8
HFKH650-DN8-1/4" NPT	8	105,1	13,7	1/4" NPT	1,34	650	76973
HFKH650-DN13-1/2" NPT	13	124,6	17	1/2" NPT	2,36	650	76974
HFKH650-DN25-1" NPT	25	159,6	21,6	1" NPT	7,85	650	76975

SAE J514/ISO/DIS11926-1 Female thread

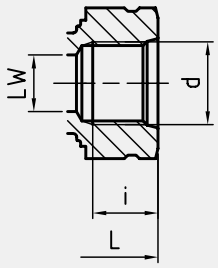

Type	LW	L	i	d	Weight [Kg]	PN [bar]	44g8
HFKH650-DN8-9/16" UNF	8	105,1	13	9/16"-18 UNF	1,33	650	on request
HFKH650-DN13-3/4" UNF	13	124,6	15	3/4"-16 UNF	2,36	650	on request
HFKH650-DN25-1 5/16" UN	25	159,6	20	1 5/16"-12 UN	7,81	650	on request

DIN 2353 / ISO 8434-1 Heavy series

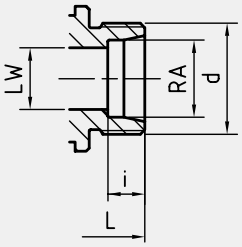

Type	LW	RA	L	i	d	Weight [Kg]	PN [bar]	44g8
HFKH650-DN8-12S	8	12	113,1	7,5	M 20x1,5	1,29	650	on request
HFKH650-DN13-16S	13	16	128,6	8,5	M 30x2	2,19	650	on request
HFKH650-DN13/15-20S	15	20	133	10,5	M 30x2	2,25	650	80746
HFKH650-DN25-30S	25	30	179,6	13,5	M 42x2	7,71	650	on request

C&T Medium pressure

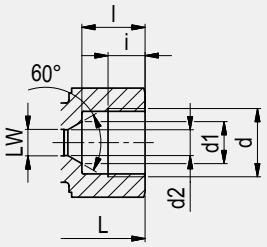

Type	LW	L	i	d	d1	d2	l	Weight [Kg]	PN [bar]	44g8
HFKH650-DN8-9/16" C&T	8	121,1	11,2	13/16-16UN	12,7	7,8	19,1	1,37	650	80304
HFKH650-DN13-3/4" C&T	13	154,6	12,7	3/4-14NPSM	15,7	11,1	23,9	2,61	650	80306
HFKH650-DN13-1" C&T	13	164,6	20,6	1 3/8-12UNF	22,4	14,3	33,3	2,65	650	on request
HFKH650-DN25-1 1/2" C&T	25	219,6	25,4	1 7/8-12UNF	35	23,8	40,5	9,30	650	79493

UNEF male (Double Ferrule)

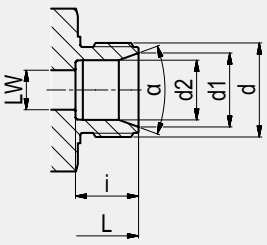

Type	LW	L	i	d	d1	d2	a	Weight [Kg]	PN [bar]	44g8
HFKH650-DN8-3/4-20 UNEF	8	113,7	12,8	3/4-20 UNEF	15	12,1 (metric) 12,7 (imperial)	40°	1,40	650	on request

Block ball valve
Stainless Steel

HFKH1000

H2 Ready



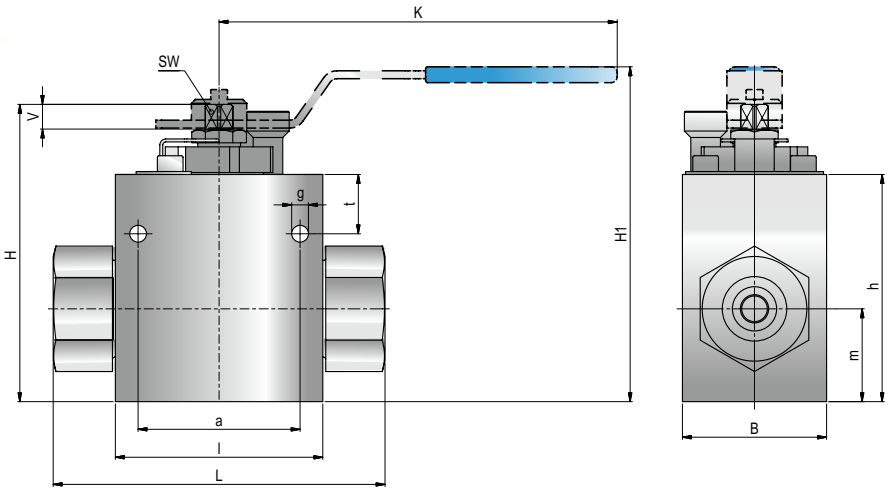

Available sizes

DN8 (3/8“), DN13 (1/2“)

Connections

C&T Medium Pressure, others on request

Acessories on request

- Locking devices
- Actuators
- Mounting holes
- Position switches
- Combinations
- Detent

Material code descripton

Materials	44g8
Body	1.4571
Trunnion	Nitronic-50®
Ball seats	Peek
Body and stem sealing	FKM / PTFE*
Tmin /Tmax	-40°C / +85°C*

*Others on request.

Certification

ATEX IIC (H_2), Ex-zone 1, 2G	Ex
DIN EN ISO 15848-1 (low emission)	
SIL 2 (IEC 61508 / ISO 13849-1)	

General dimensions

Type	l	B	H	h	m	Vmin	SW	a	g	t	K	H1	Lever
HFKH1000-DN8	88	65	148	110	45	12,5	9	65	Ø9	30	202	167	St
HFKH1000-DN13	105	73	150,5	115	47	12,5	11	82	Ø9	30	202	169,5	St

Connection type

C&T Medium pressure

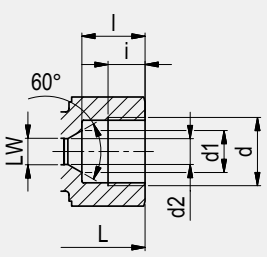

Dimensions

Type	LW	L	i	d	d1	d2	l	Weight [Kg]
HFKH1000-DN8-3/8" C&T	8	121	9,6	9/16-18UNF	7,7	5,1	15,7	5,88
HFKH1000-DN8-9/16" C&T	8	131	11,2	13/16-16UN	7,8	12,7	19,1	6,08
HFKH1000-DN13-1" C&T	13	168	20,6	1 3/8-12UNF	14,3	22,4	33,3	8,37

Order code per material combination

PN [bar]	44m8
1034	79801
1034	79611
1034	on request

Please note the pressure ratings of the tube connections!

Double safety and bleed valve Stainless Steel

DSB-HFKH650

H_2 Ready



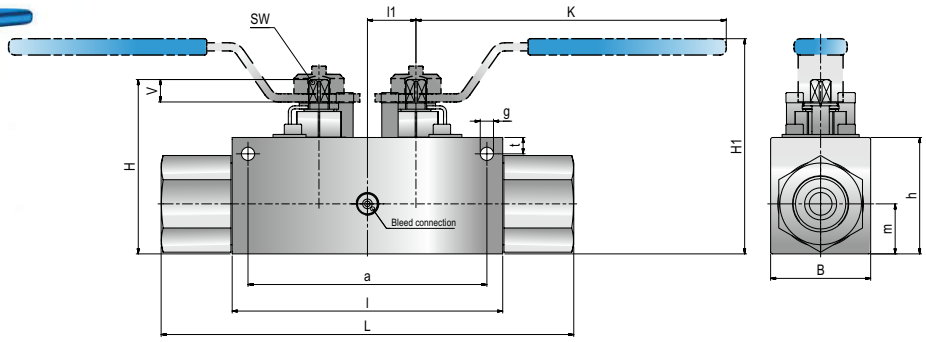

MHA ZENTGRAF
Flow Control Technology

Available sizes

DN8 (3/8“), DN13 (1/2“), DN25 (1“)

Connections

C&T Medium Pressure, others on request

Accessories on request

- Locking devices
- Actuators
- Mounting holes
- Position switches
- Detent
- **Needle or ball valve bleed**

Material code description

Materials	44g8
Body	1.4571
Ball	1.4571 / Nitronic-50®
Stem	Nitronic-50®
Ball seats	Peek
Body and stem sealing	FKM / PTFE*
Tmin /Tmax	-40°C / +85°C*

*Others on request.

Certification

ATEX IIC (H_2), Ex-zone 1, 2G	
DIN EN ISO 15848-1 (low emission)	
SIL 2 (IEC 61508 / ISO 13849-1)	

General dimensions

Type	l	B	H	h	m	Vmin	SW	a	g	t	I1	K	H1	Lever
DSB-HFKH650-DN8	131	49	85,5	57	24,5	11	8	115	Ø6,5	8	27,75	152	105	St
DSB-HFKH650-DN13	132,5	49	85,5	57	24,5	11	8	117	Ø6,5	8	23,75	152	105	St
DSB-HFKH650-DN25	190	78	126,5	97	39	11	12	160	Ø9	17	35	202	151,5	St

Connection type

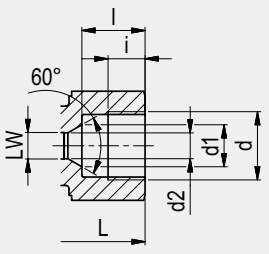

Dimensions

Type	LW	L	i	d	d1	d2	l	Weight [Kg]
DSB-HFKH650-DN8-9/16" C&T	8	176,6	11,2	13/16-16UN	12,7	7,8	19,1	3,5
DSB-HFKH650-DN13-1" C&T	13	222,5	20,6	1 3/8-12UNF	22,4	14,3	33,3	4,6
DSB-HFKH650-DN25-1 1/2" C&T	25	289,6	25,4	1 7/8-12UNF	35	23,8	40,5	13,5

Order code per material combination

PN [bar]	44g8
650	on request
650	on request
650	on request

Double safety and bleed valve
Stainless Steel

DSB-HFKH1000 H2 Ready

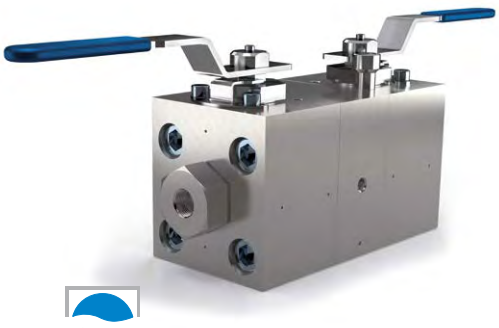

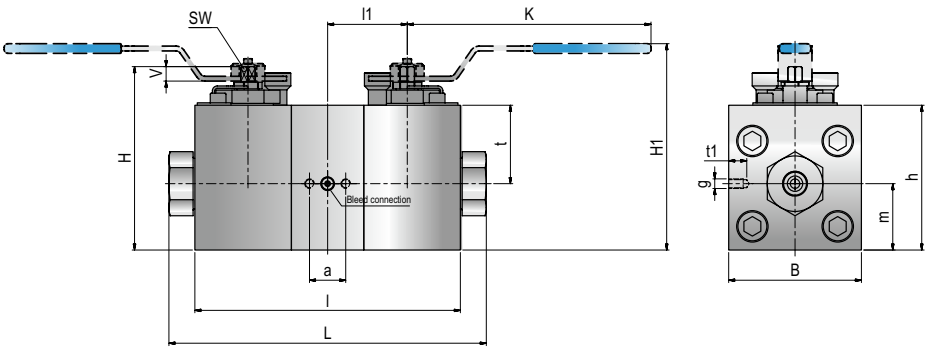

MHA ZENTGRAF
Flow Control Technology

Available sizes

DN8 (3/8“)

Connections

C&T Medium Pressure, others on request

Accessories on request

- Locking devices
- Actuators
- Mounting holes
- Position switches
- Detent
- **Needle or ball valve bleed**

Material code description

Materials	44g8
Body	1.4571
Ball	1.4571 / Nitronic-50®
Stem	Nitronic-50®
Ball seats	Peek
Body and stem sealing	FKM / PTFE*
Tmin / Tmax	-40°C / +85°C*

*Others on request.

Certification

- ATEX IIC (H_2), Ex-zone 1, 2G
- DIN EN ISO 15848-1 (low emission)
- SIL 2 (IEC 61508 / ISO 13849-1)

General dimensions

Type	l	B	H	h	m	Vmin	SW	a	g	t1	t	l1	K	H1	Lever
DSB-HFKH1000-DN8	220	110	152	120	55	12	9	30	M8	15	65	66	202	171	St

C&T Medium pressure

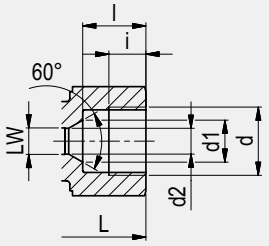

Type	LW	L	i	d	d1	d2	l	Weight [Kg]	PN [bar]	44m8
DSB-HFKH1000-DN8-9/16“ C&T	8	263	11,2	13/16-16UN	12,7	7,8	19,1	24,3	1034	on request

Spindle valve
Stainless Steel

HFSV600

H2 Ready

MHA ZENTGRAF
Flow Control Technology



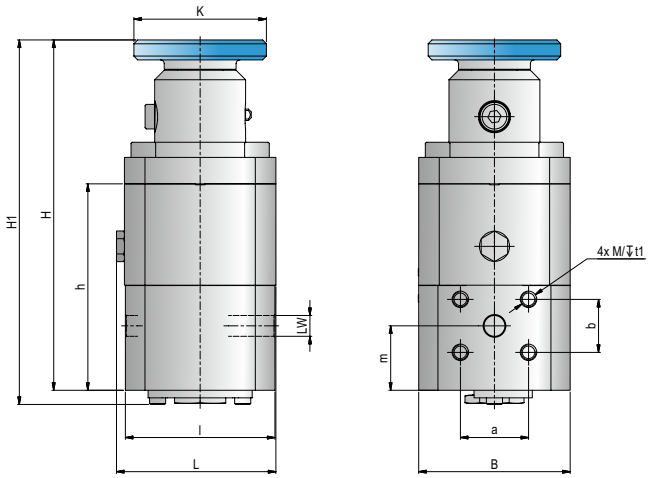

Available sizes

DN11

Connections

Flange Connection: 36x28 - 4 x M8

Accessories on request

- Different flange adaptors and mounting sets
- Handwheel available in stainless steel or aluminium

Material code description

Materials	44gB
Body	1.4571
Spindle	Nitronic-50
Spindle sealing (internal)	PEEK
Body/ Spindle sealing (external)	EPDM + PTFE + PE
Tmin / Tmax	-40°C / +85°C*

*Others on request.

Certification

ATEX IIC (H_2), Ex-zone 1, 2G

TPED ISO 10297

General dimensions

Type	LW	L	l	H1	H	h	B	m	M	t1	a	b	K
HFSV600-DN11	11	84,2	79	192	185	109	80	34	M8	13,5	36	28	Ø70

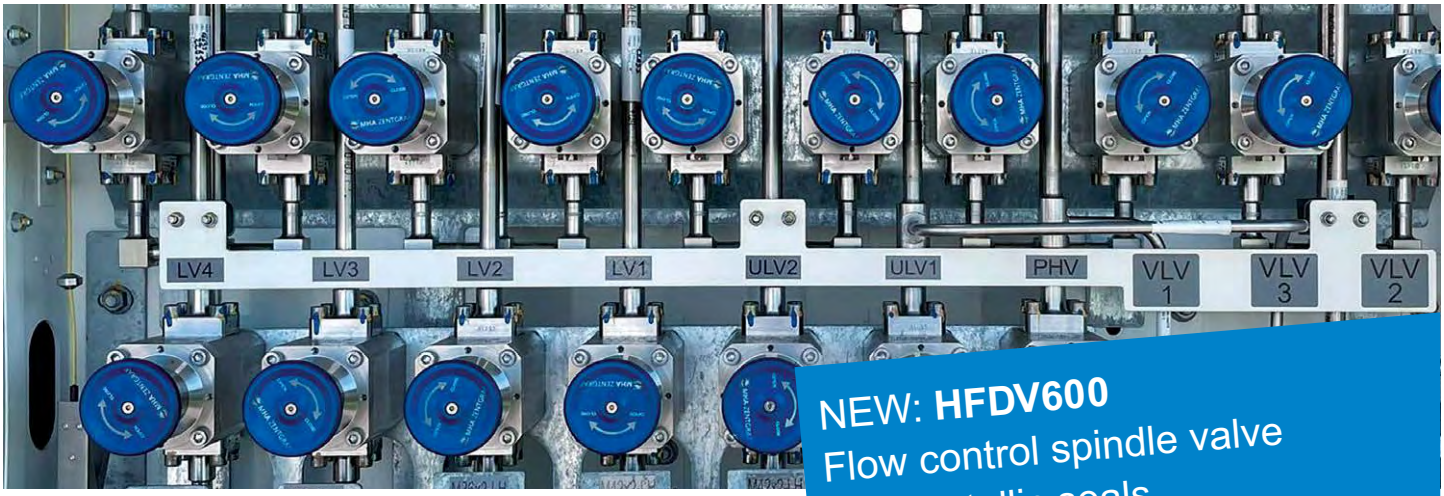

NEW: **HFDV600**
Flow control spindle valve with metallic seals

gepef

Check valve
Stainless Steel

RVH2

H2 Ready

MHA ZENTGRAF
Flow Control Technology



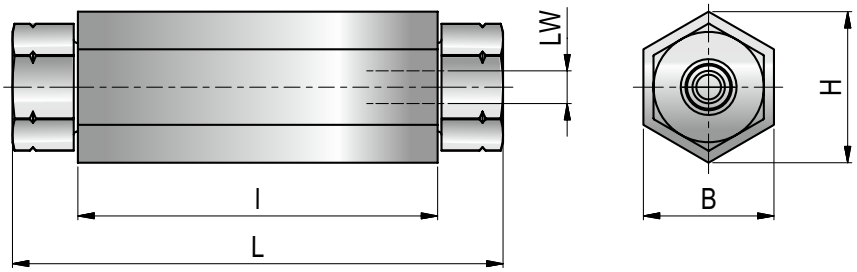

Available sizes

DN8 (3/8“), DN13 (1/2“)*

Connections

DIN ISO 228 Female thread, ANSI B1.20.1 NPT Female thread, SAE J514/ISO/ DIS11926-1 Female thread, DIN 2353 / ISO 8434-1 Heavy series, C&T Medium Pressure, others on request

Porting pattern

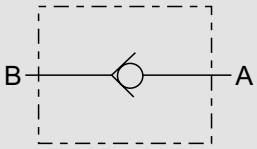

Material

Materials	44g
Body	1.4571
Seats	PEEK
Tmin / Tmax	-40°C / +85°C
Cracking pressure	0,5 bar*

*Others on request.

Certification

ATEX IIC (H2), Ex-zone 1, 2G

General dimensions

Type	LW	l	B	H
RVH2-DN8	8	88	32	37
RVH2-DN13	13	97	46	53

Connection type

DIN ISO 228 Female thread

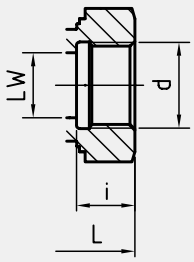

Dimensions					Order code per Material combination	
Type	L	i	d	Weight [Kg]	PN [bar]	44g
RVH2-DN8-G1/4	120	14	G 1/4	0,7	650	on request
RVH2-DN13-G1/2	136	16,3	G 1/2	1,6	650	on request

ANSI B1.20.1 NPT Female thread

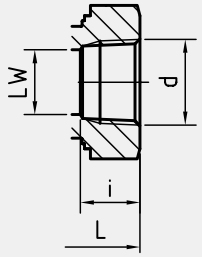

Type	L	i	d	Weight [Kg]	PN [bar]	44g
RVH2-DN8-1/4"NPT	120	13,7	1/4" NPT	0,7	650	79488
RVH2-DN13-1/2"NPT	136	17	1/2" NPT	1,6	650	79504

DIN 2353 / ISO 8434-1 Heavy series

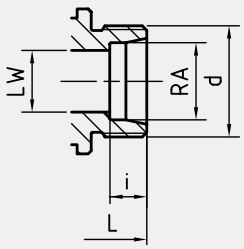

Type	LW	RA	L	i	d	Weight [Kg]	PN [bar]	44g
RVH2-DN8-12S	8	12	128	7,5	M20x1,5	0,65	650	on request
RVH2-DN13/10-14S	10	14	144	8	M22x1,5	1,5	650	81140
RVH2-DN13/15-20S	15	20	152	10,5	M30x2	1,6	650	81507

C&T Medium pressure

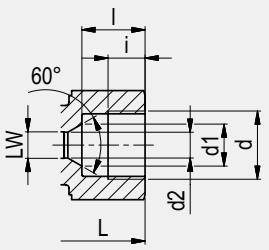

Type	L	i	d	d1	d2	l	Weight [Kg]	PN [bar]	44g
RVH2-DN8-9/16" C&T	134	11,2	13/16-16UN	12,7	7,8	19,1	0,8	1034	on request
RVH2-DN13-3/4" C&T	172	12,7	3/4-14NPSM	15,7	11,1	23,9	1,9	1034	79497

UNEF Male (Double ferrule)

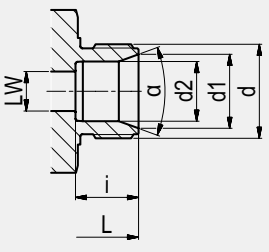

Type	L	i	d	d1	d2	a	Weight [Kg]	PN [bar]	44g
RVH2-DN8-3/4-20UNEF	128,6	12,8	3/4-20 UNEF	15	12,1 (metric) 12,7 (imperial)	40°	0,7	650	79481

Please note the pressure ratings of the tube connections!

Filter
Stainless Steel

H2F1-1000

H2 Ready



MHA ZENTGRAF
Flow Control Technology

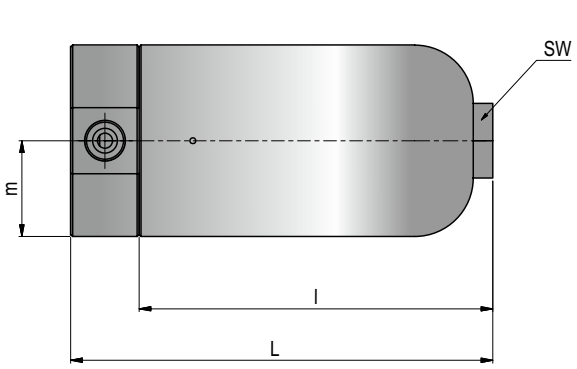

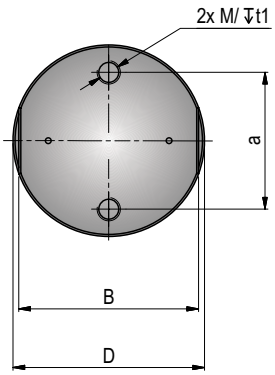

Available sizes

DN8 (3/8“)

Connections

9/16“ C&T Medium Pressure*

Technical data

Design Code	PED
Category (PED)	III
Volume	0,15 dm³
Micron Rating	20 µm*

Material code description

Materials	48
Body	1.4571
Filter	1.4404
Sealing	FKM or EPDM
Tmin / Tmax	-40°C / +85°C*

Certification

ATEX IIC (H_2), Ex-zone 1, 2G

*Others on request.

General dimensions

Type	L	l	B	D	m	SW	a	M	t1
H2F1-1000	216	181	92	98	49	27	70	M12	22

Connection type

C&T Medium pressure

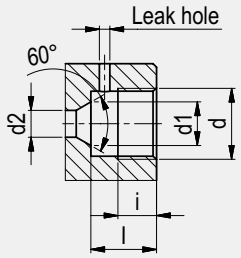

Dimensions

Type	i	d	d1	d2	l	Weight [Kg]
H2F1-1000-DN8-9/16“ C&T	11,2	13/16-16UN	12,7	7,8	19,1	12

Order code per Material combination

PN [bar]	48
1000	on request

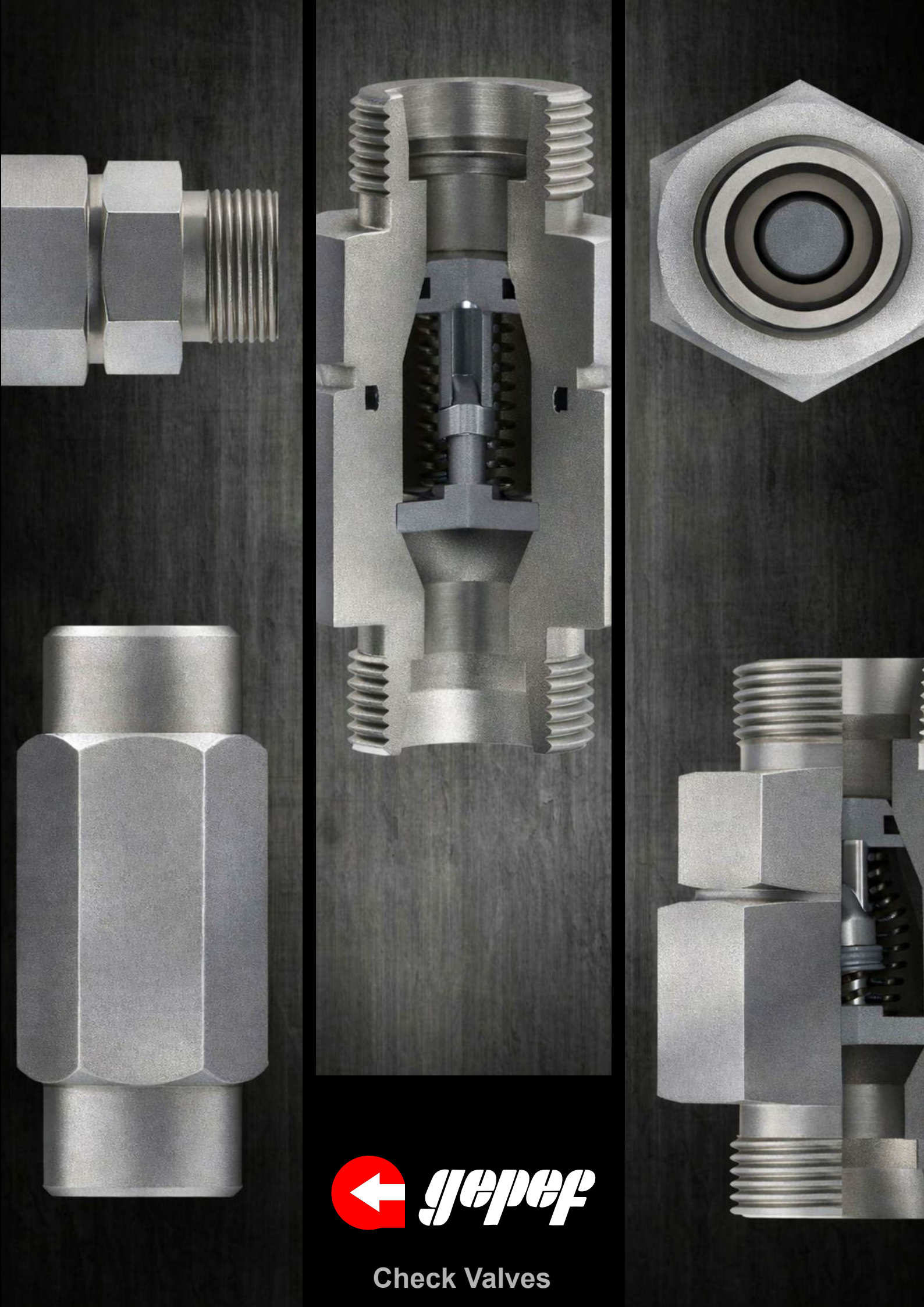

gepef

Check Valves

CHECK VALVE (NON-RETURN)

All Check Valves are manufactured by GEPEF, the result of the development of products with high efficiency standards, providing perfect non-return operation and a wide range of actuation options (opening pressure, selection of retention seat) and connection types (tube-to-tube; male threads, female threads, as well as combinations of different connection types in the same valve). Also available in special versions for low pressures and high vacuums.



Opening Pressure
Approximately 1 bar (other values upon request)

Surface Treatment
Chemical Nickel Plating or Trivalent Chromium VI
Nickel Zinc

Seals and Operating Temperatures
NBR / Buna-N (-25°C to 100°C) (-13°F to +212°F) (Standard)
(FKM) Viton (-15°C to 200°C) (5°F to +392°F) - V
EPDM (-40°C to 150°C) (-40°F to +302°F) - E

Materials
Carbon Steel
Stainless Steel AISI 316



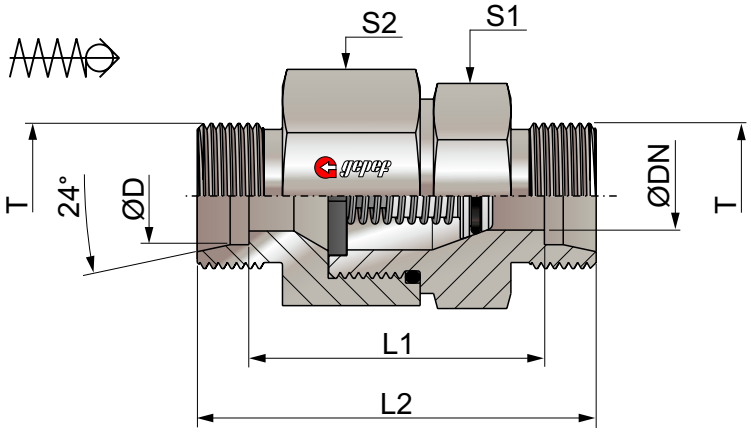

DIN 2353 / ISO 8434-1 Series L								
Type	D	DN	T	S1	S2	L1	L2	Working Pressure
VARMA 6L	6	4	M12x1,5	17	17	29	43	400 bar / 5800 PSI
VARMA 8L	8	6	M14x1,5	19	19	30	44	400 bar / 5800 PSI
VARMA 10L	10	8	M16x1,5	22	24	40,5	55	400 bar / 5800 PSI
VARMA 12L	12	8	M18x1,5	27	30	43,5	58	400 bar / 5800 PSI
VARMA 15L	15	12	M22x1,5	27	32	47,5	62	400 bar / 5800 PSI
VARMA 18L	18	16	M26x1,5	36	41	51,5	67	400 bar / 5800 PSI
VARMA 22L	22	20	M30x2	41	46	61,5	77	250 bar / 3625 PSI
VARMA 28L	28	25	M36x2	50	55	69,5	85	250 bar / 3625 PSI
VARMA 35L	35	32	M45x2	60	65	75,5	96	250 bar / 3625 PSI
VARMA 42L	42	32	M52x2	65	70	74	96	250 bar / 3625 PSI

DIN 2353 / ISO 8434-1 Series H								
Type	D	DN	T	S1	S2	L1	L2	Working Pressure
VARMA 6S	6	4	M14x1,5	19	19	34,5	48,5	420 bar / 6090 PSI
VARMA 8S	8	4	M16x1,5	19	19	34,5	48,5	420 bar / 6090 PSI
VARMA 10S	10	6	M18x1,5	22	24	40,5	55,5	420 bar / 6090 PSI
VARMA 12S	12	8	M20x1,5	24	27	42,5	57,5	420 bar / 6090 PSI
VARMA 14S	14	10	M22x1,5	27	32	47,5	64	420 bar / 6090 PSI
VARMA 16S	16	12	M24x1,5	32	36	50,5	68	420 bar / 6090 PSI
VARMA 20S	20	16	M30x2	41	46	54,5	76	420 bar / 6090 PSI
VARMA 25S	25	20	M36x2	46	50	58,5	83	420 bar / 6090 PSI
VARMA 30S	30	25	M42x2	60	60	69,5	97	250 bar / 3625 PSI
VARMA 38S	38	32	M52x2	65	70	75,5	108	250 bar / 3625 PSI

Coding Example:

VARMA 6L (Check Valve, Retention Line, for tube Ø6, Series L).

Material: Stainless Steel AISI 316, add the letter I at the end of the code.

Seals in Viton or EPDM, add the letter V or E at the end of the code.

If you require another type of check valve not listed in this catalog, please contact our technical department.

Check Valve (Non-Return)

VARMA TUBE x METRIC



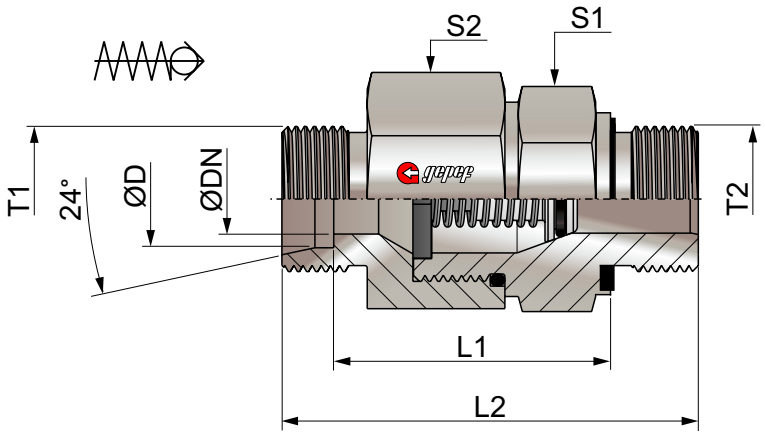

DIN 2353 / ISO 8434-1 Series L - ISO 9974-2 Metric Thread

Type	D	DN	T1	T2	S1	S2	L1	L2	Working Pressure
VARMA 6L - M10x1	6	4	M12x1,5	M10x1	17	17	28	44	400 bar / 5800 PSI
VARMA 8L - M12x1,5	8	6	M14x1,5	M12x1,5	19	19	30	48	400 bar / 5800 PSI
VARMA 10L - M14x1,5	10	8	M16x1,5	M14x1,5	22	24	38,5	57,5	400 bar / 5800 PSI
VARMA 12L - M16x1,5	12	8	M18x1,5	M16x1,5	27	30	42,5	61,5	400 bar / 5800 PSI
VARMA 15L - M18x1,5	15	12	M22x1,5	M18x1,5	27	32	45,5	64,5	400 bar / 5800 PSI
VARMA 18L - M22x1,5	18	16	M26x1,5	M22x1,5	36	36	50	70	400 bar / 5800 PSI
VARMA 22L - M26x1,5	22	20	M30x2	M26x1,5	41	46	55	78,5	250 bar / 3625 PSI
VARMA 28L - M33x2	28	25	M36x2	M33x2	50	55	63	88,5	250 bar / 3625 PSI
VARMA 35L - M42x2	35	32	M45x2	M42x2	60	60	69	99,5	250 bar / 3625 PSI
VARMA 42L - M48x2	42	32	M52x2	M48x2	65	70	68,5	99,5	250 bar / 3625 PSI

DIN 2353 / ISO 8434-1 Series S - ISO 9974-2 Metric Thread

Type	D	DN	T1	T2	S1	S2	L1	L2	Working Pressure
VARMA 6S - M12x1,5	6	4	M14x1,5	M12x1,5	19	19	31,5	50,5	420 bar / 6090 PSI
VARMA 8S - M14x1,5	8	4	M16x1,5	M14x1,5	19	19	31,5	50,5	420 bar / 6090 PSI
VARMA 10S - M16x1,5	10	6	M18x1,5	M16x1,5	22	24	38	57,5	420 bar / 6090 PSI
VARMA 12S - M18x1,5	12	8	M20x1,5	M18x1,5	24	27	41	60,5	420 bar / 6090 PSI
VARMA 14S - M20x1,5	14	10	M22x1,5	M20x1,5	27	32	44,5	66,5	420 bar / 6090 PSI
VARMA 16S - M22x1,5	16	12	M24x1,5	M22x1,5	32	36	48	69	420 bar / 6090 PSI
VARMA 20S - M27x2	20	16	M30x2	M27x2	41	46	52	78,5	420 bar / 6090 PSI
VARMA 25S - M33x2	25	20	M36x2	M33x2	46	50	54,5	84,5	420 bar / 6090 PSI
VARMA 30S - M42x2	30	25	M42x2	M42x2	60	60	64	97,5	250 bar / 3625 PSI
VARMA 38S - M48x2	38	32	M52x2	M48x2	65	70	69,5	107,5	250 bar / 3625 PSI

WD Type

ISO 1179-2 - BSP Thread

ISO 9974-2 - Metric Thread

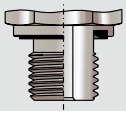

Coding Example:

VARMA 6L - M10x1 (Check Valve for tube Ø6, Series L, male thread M10x1, WD sealing type).

Material: Stainless Steel AISI 316, add the letter I at the end of the code.

Seals in Viton or EPDM, add the letter V or E at the end of the code.

If another type of check valve not listed in this catalog is required, please contact our technical department.

Check Valve (Non-Return) — VARMA TUBE x BSP



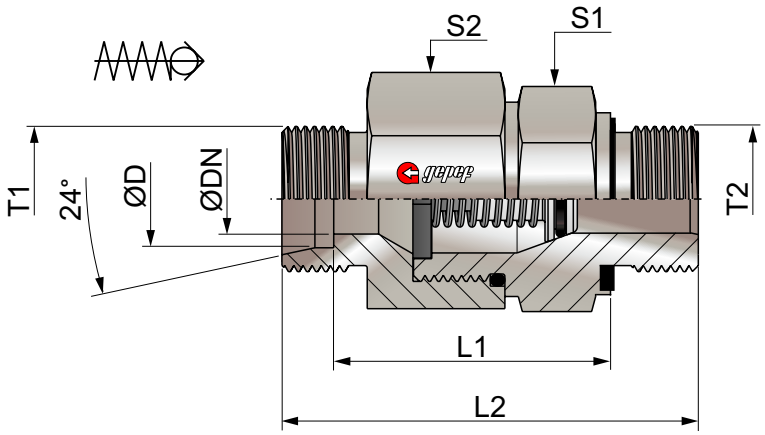

DIN 2353 / ISO 8434-1 Series L - ISO 1179-2 BSP Thread

Type	D	DN	T1	T2	S1	S2	L1	L2	Working Pressure
VARMA 6L - G1/8 BSP	6	4	M12x1,5	G1/8 BSP	17	17	28	43	400 bar / 5800 PSI
VARMA 8L - G1/4 BSP	8	6	M14x1,5	G1/4 BSP	19	19	30	49	400 bar / 5800 PSI
VARMA 10L - G1/4 BSP	10	8	M16x1,5	G1/4 BSP	22	24	38,5	58	400 bar / 5800 PSI
VARMA 12L - G3/8 BSP	12	8	M18x1,5	G3/8 BSP	27	30	42,5	62	400 bar / 5800 PSI
VARMA 15L - G1/2 BSP	15	12	M22x1,5	G1/2 BSP	27	32	45,5	67	400 bar / 5800 PSI
VARMA 18L - G1/2 BSP	18	16	M26x1,5	G1/2 BSP	36	36	50	72	400 bar / 5800 PSI
VARMA 22L - G3/4 BSP	22	20	M30x2	G3/4 BSP	41	46	55	79	250 bar / 3625 PSI
VARMA 28L - G1 BSP	28	25	M36x2	G1 BSP	50	55	63	89	250 bar / 3625 PSI
VARMA 35L - G1.1/4 BSP	35	32	M45x2	G1.1/4 BSP	60	60	69	100	250 bar / 3625 PSI
VARMA 42L - G1.1/4 BSP	42	32	M52x2	G1.1/4 BSP	65	70	68,5	102	250 bar / 3625 PSI

DIN 2353 / ISO 8434-1 Series S - ISO 1179-2 BSP Thread

Type	D	DN	T1	T2	S1	S2	L1	L2	Working Pressure
VARMA 6S - G1/4 BSP	6	4	M14x1,5	G1/4 BSP	19	19	31,5	50,5	420 bar / 6090 PSI
VARMA 8S - G1/4 BSP	8	4	M16x1,5	G1/4 BSP	19	19	31,5	50,5	420 bar / 6090 PSI
VARMA 10S - G3/8 BSP	10	6	M18x1,5	G3/8 BSP	22	24	38	57,5	420 bar / 6090 PSI
VARMA 12S - G3/8 BSP	12	8	M20x1,5	G3/8 BSP	24	27	41	60,5	420 bar / 6090 PSI
VARMA 14S - G1/2 BSP	14	10	M22x1,5	G1/2 BSP	27	32	44,5	67	420 bar / 6090 PSI
VARMA 16S - G1/2 BSP	16	12	M24x1,5	G1/2 BSP	32	36	48	71	420 bar / 6090 PSI
VARMA 20S - G3/4 BSP	20	16	M30x2	G3/4 BSP	41	46	52	79	420 bar / 6090 PSI
VARMA 25S - G1 BSP	25	20	M36x2	G1 BSP	46	50	54,5	84,5	420 bar / 6090 PSI
VARMA 30S - G1.1/4 BSP	30	25	M42x2	G1.1/4 BSP	60	60	64	98	250 bar / 3625 PSI
VARMA 38S - G1.1/2 BSP	38	32	M52x2	G1.1/2 BSP	65	70	69,5	108	250 bar / 3625 PSI

WD Type

ISO 1179-2 - BSP Thread

ISO 9974-2 - Metric Thread

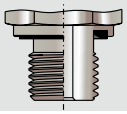

Coding Example:

VARMA 6L - G1/8 BSP (Check Valve for tube Ø6, Series L, male thread G1/8 BSP, WD sealing type).

Material: Stainless Steel AISI 316, add the letter I at the end of the code.

Seals in Viton or EPDM, add the letter V or E at the end of the code.

If another type of check valve not listed in this catalog is required, please contact our technical department.

Check Valve (Anti-Return)

METRIC VARMA x TUBE



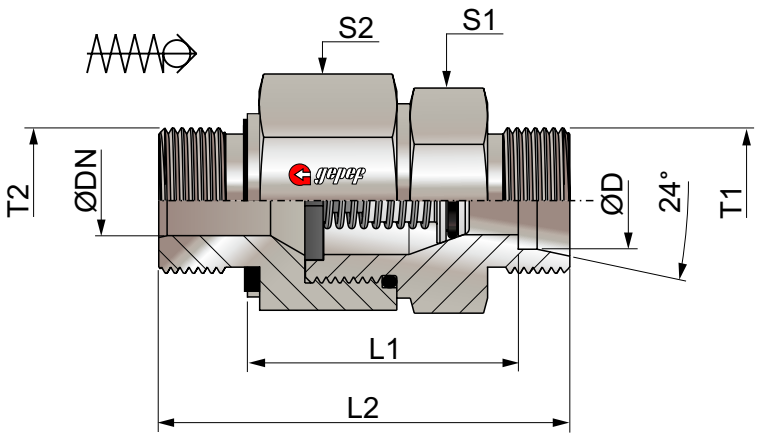

ISO 9974-2 Metric Thread - DIN 2353 / ISO 8434-1 Light Series L

Type	D	DN	T1	T2	S1	S2	L1	L2	Working Pressure
VARMA M10x1 - 6L	6	4	M12x1,5	M10x1	17	17	28	43	400 bar / 5800 PSI
VARMA M12x1,5 - 8 L	8	6	M14x1,5	M12x1,5	19	19	29	48	400 bar / 5800 PSI
VARMA M14x1,5 - 10L	10	8	M16x1,5	M14x1,5	22	24	38,5	57,5	400 bar / 5800 PSI
VARMA M16x1,5 - 12L	12	8	M18x1,5	M16x1,5	27	30	42,5	61,5	400 bar / 5800 PSI
VARMA M18x1,5 - 15L	15	12	M22x1,5	M18x1,5	27	32	45,5	64,5	400 bar / 5800 PSI
VARMA M22x1,5 - 18L	18	16	M26x1,5	M22x1,5	36	36	50	70	400 bar / 5800 PSI
VARMA M26x1,5 - 22L	22	20	M30x2	M26x1,5	41	46	55	80	250 bar / 3625 PSI
VARMA M33x2 - 28L	28	25	M36x2	M33x2	50	55	63	90	250 bar / 3625 PSI
VARMA M42x2 - 35L	35	32	M45x2	M42x2	60	60	69	101	250 bar / 3625 PSI
VARMA M48x2 - 42L	42	32	M52x2	M48x2	65	70	68,5	104	250 bar / 3625 PSI

ISO 9974-2 Metric Thread - DIN 2353 / ISO 8434-1 Heavy Series S

Type	D	DN	T1	T2	S1	S2	L1	L2	Working Pressure
VARMA M12x1,5 - 6S	6	4	M14x1,5	M12x1,5	19	19	31,5	50,5	420 bar / 6090 PSI
VARMA M14x1,5 - 8S	8	4	M16x1,5	M14x1,5	19	19	31,5	50,5	420 bar / 6090 PSI
VARMA M16x1,5 - 10S	10	6	M18x1,5	M16x1,5	22	24	38	57,5	420 bar / 6090 PSI
VARMA M18x1,5 - 12S	12	8	M20x1,5	M18x1,5	27	27	41	60,5	420 bar / 6090 PSI
VARMA M20x1,5 - 14S	14	10	M22x1,5	M20x1,5	27	32	44,5	66,5	420 bar / 6090 PSI
VARMA M22x1,5 - 16S	16	12	M24x1,5	M22x1,5	32	36	48	69	420 bar / 6090 PSI
VARMA M27x2 - 20S	20	16	M30x2	M27x2	41	46	52	77	420 bar / 6090 PSI
VARMA M33x2 - 25S	25	20	M36x2	M33x2	46	50	54,5	85	420 bar / 6090 PSI
VARMA M42x2 - 30S	30	25	M42x2	M42x2	60	60	64	98	250 bar / 3625 PSI
VARMA M48x2 - 38S	38	32	M52x2	M48x2	65	70	69,5	110	250 bar / 3625 PSI

WD Type

ISO 1179-2 - BSP Thread

ISO 9974-2 - Metric Thread

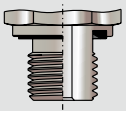

Coding Example:

VARMA M18x1 - 6L (Check valve for 6D tube, Light Series L, male thread M18x1, WD sealing type).

Stainless steel material AISI 316, add the letter I at the end of the code.

Viton or EPDM sealing, add the letter V or E, respectively, at the end of the code.

If another type of check valve not listed in this catalog is required, please contact our technical department.

Check Valve (Anti-Return)

VARMA BSP x TUBE



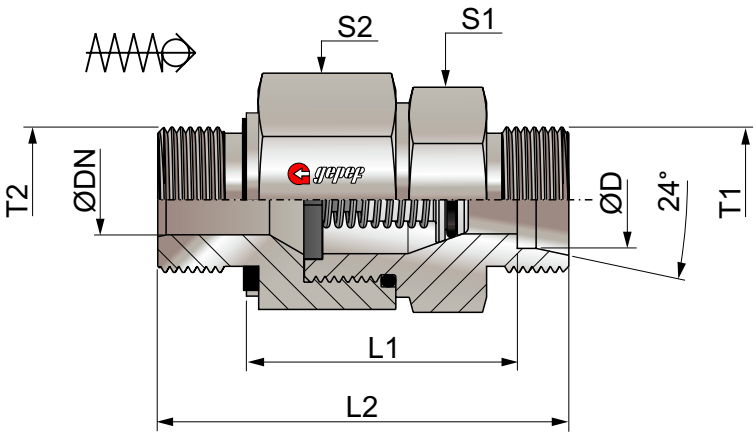

ISO 1179-2 BSPP Thread - DIN 2353 / ISO 8434-1 Light Series L

Type	D	DN	T1	T2	S1	S2	L1	L2	Working Pressure
VARMA G1/8 BSP - 6L	6	4	M12x1,5	G1/8 BSP	17	17	26,5	41,5	400 bar / 5800 PSI
VARMA G1/4 BSP - 8L	8	6	M14x1,5	G1/4 BSP	19	19	28,5	47,5	400 bar / 5800 PSI
VARMA G1/4 BSP - 10L	10	8	M16x1,5	G1/4 BSP	22	24	38,5	58	400 bar / 5800 PSI
VARMA G3/8 BSP - 12L	12	8	M18x1,5	G3/8 BSP	27	30	40,5	60	400 bar / 5800 PSI
VARMA G1/2 BSP - 15L	15	12	M22x1,5	G1/2 BSP	27	32	42,5	64	400 bar / 5800 PSI
VARMA G1/2 BSP - 18L	18	16	M26x1,5	G1/2 BSP	36	36	48	70	400 bar / 5800 PSI
VARMA G3/4 BSP - 22L	22	20	M30x2	G3/4 BSP	41	46	56	80	250 bar / 3625 PSI
VARMA G1 BSP - 28L	28	25	M36x2	G1 BSP	50	55	64	90	250 bar / 3625 PSI
VARMA G1.1/4 BSP - 35L	35	32	M45x2	G1.1/4 BSP	60	60	70	101	250 bar / 3625 PSI
VARMA G1.1/4 BSP - 42L	42	32	M52x2	G1.1/4 BSP	65	70	70,5	104	250 bar / 3625 PSI

ISO 1179-2 BSP Thread - DIN 2353 / ISO 8434-1 Heavy Series S

Type	D	DN	T1	T2	S1	S2	L1	L2	Working Pressure
VARMA G1/4 BSP - 6S	6	4	M14x1,5	G1/4 BSP	19	19	31,5	50,5	420 bar / 6090 PSI
VARMA G1/4 BSP - 8S	8	4	M16x1,5	G1/4 BSP	19	19	31,5	50,5	420 bar / 6090 PSI
VARMA G3/8 BSP - 10S	10	6	M18x1,5	G3/8 BSP	22	24	38	57,5	420 bar / 6090 PSI
VARMA G3/8 BSP - 12S	12	8	M20x1,5	G3/8 BSP	24	27	41	60,5	420 bar / 6090 PSI
VARMA G1/2 BSP - 14S	14	10	M22x1,5	G1/2 BSP	27	32	43,5	66	420 bar / 6090 PSI
VARMA G1/2 BSP - 16S	16	12	M24x1,5	G1/2 BSP	32	36	46	69	420 bar / 6090 PSI
VARMA G3/4 BSP - 20S	20	16	M30x2	G3/4 BSP	41	46	50	77	420 bar / 6090 PSI
VARMA G1 BSP - 25S	25	20	M36x2	G1 BSP	46	50	54,5	85	420 bar / 6090 PSI
VARMA G1.1/4 BSP - 30S	30	25	M42x2	G1.1/4 BSP	60	60	64	98	250 bar / 3625 PSI
VARMA G1.1/2 BSP - 38S	38	32	M52x2	G1.1/2 BSP	65	70	71,5	110	250 bar / 3625 PSI

WD Type

ISO 1179-2 - BSP Thread

ISO 9974-2 - Metric Thread

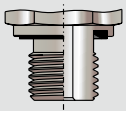

Coding Example:

VARMA G1/4 BSP - 6S (Check valve for 6D tube, Heavy Series S, BSPP male thread G1/4, WD sealing type).

Stainless steel material AISI 316, add the letter I at the end of the code.

Viton or EPDM sealing, add the letter V or E, respectively, at the end of the code.

If another check valve type not listed in this catalog is required, please contact our technical department.

Check Valve (Anti-Return) VARFA



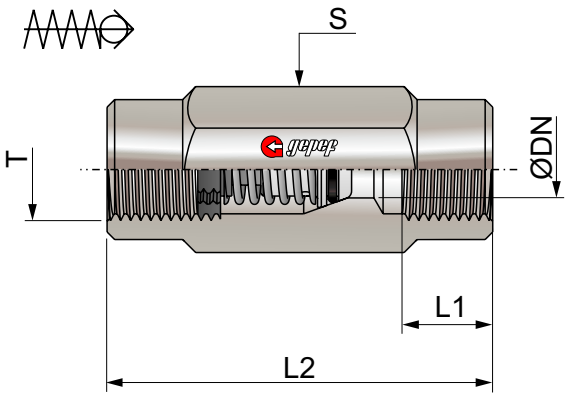

Type	D	T	S	L1	L2	Working Pressure
VARFA G1/8 BSP	4	G1/8 BSP	19	9,5	42,5	400 bar / 5800 PSI
VARFA G1/4 BSP	8	G1/4 BSP	19	13,5	51	400 bar / 5800 PSI
VARFA G3/8 BSP	8	G3/8 BSP	24	13,5	60	400 bar / 5800 PSI
VARFA G1/2 BSP	12	G1/2 BSP	32	15,5	72	315 bar / 4560 PSI
VARFA G3/4 BSP	16	G3/4 BSP	41	17,5	84	250 bar / 3625 PSI
VARFA G1 BSP	20	G1 BSP	46	19,5	95	250 bar / 3625 PSI
VARFA G1.1/4 BSP	25	G1.1/4 BSP	60	23,5	110	250 bar / 3625 PSI
VARFA G1.1/2 BSP	32	G1.1/2 BSP	65	25,5	114	250 bar / 3625 PSI
VARFA G2 BSP	40	G2 BSP	90	25,5	165	250 bar / 3625 PSI

Type	D	T	S1	L1	L2	Working Pressure
VARFA 1/8 NPT	4	1/8 NPT	19	9,5	42,5	400 bar / 5800 PSI
VARFA 1/4 NPT	8	1/4 NPT	19	13,5	51	400 bar / 5800 PSI
VARFA 3/8 NPT	8	3/8 NPT	24	13,5	60	400 bar / 5800 PSI
VARFA 1/2 NPT	12	1/2 NPT	32	15,5	72	315 bar / 4560 PSI
VARFA 3/4 NPT	16	3/4 NPT	41	17,5	84	250 bar / 3625 PSI
VARFA 1 NPT	20	1 NPT	46	19,5	95	250 bar / 3625 PSI
VARFA 1.1/4 NPT	25	1.1/4 NPT	60	23,5	110	250 bar / 3625 PSI
VARFA 1.1/2 NPT	32	1.1/2 NPT	65	25,5	114	250 bar / 3625 PSI
VARFA 2 NPT	40	2 NPT	90	25,5	165	250 bar / 3625 PSI

Coding Example:

VARFA G1/8 BSP (Check valve with female thread G1/8 BSP).

Stainless steel material AISI 316, add the letter I at the end of the code.

Viton or EPDM sealing, add the letter V or E, respectively, at the end of the code.

If another type of check valve not listed in this catalog is required, please contact our technical department.

CHECK VALVE (FLOW CHARTS)

The flow values shown are based on hydraulic oil with flow rate in l/min, relative to the maximum allowable flow velocity of 8 m/s.

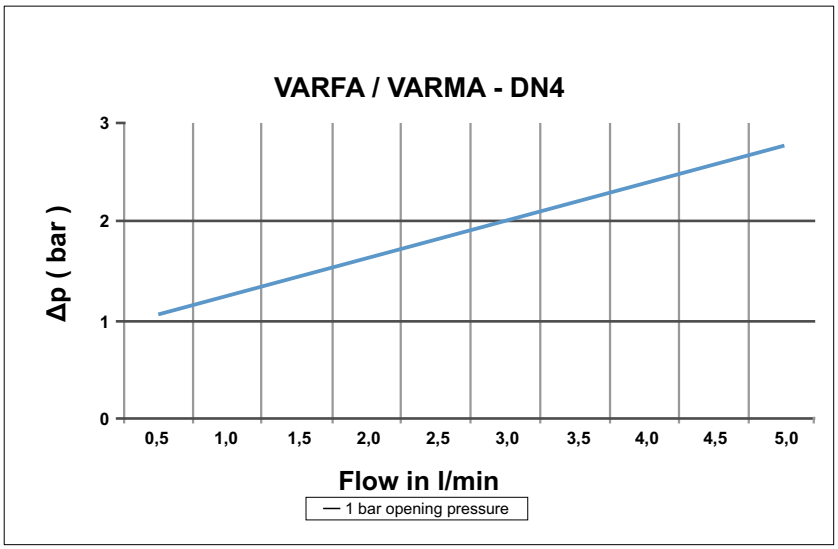

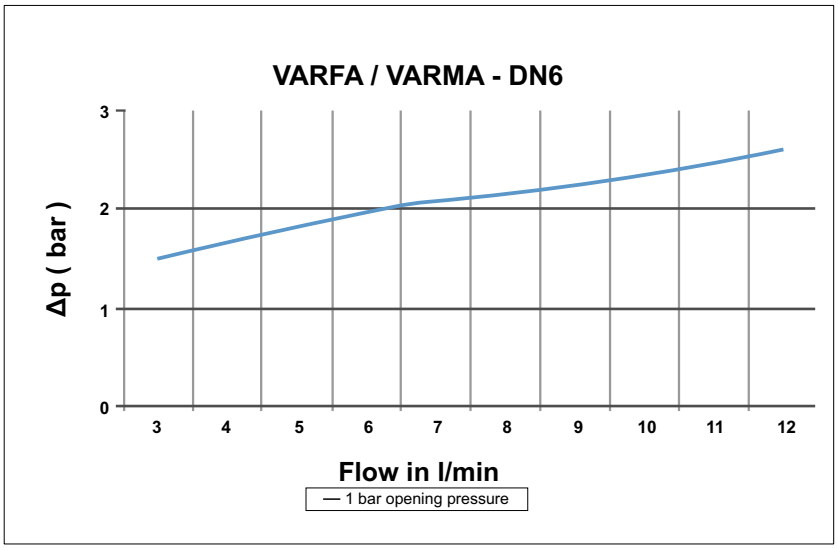

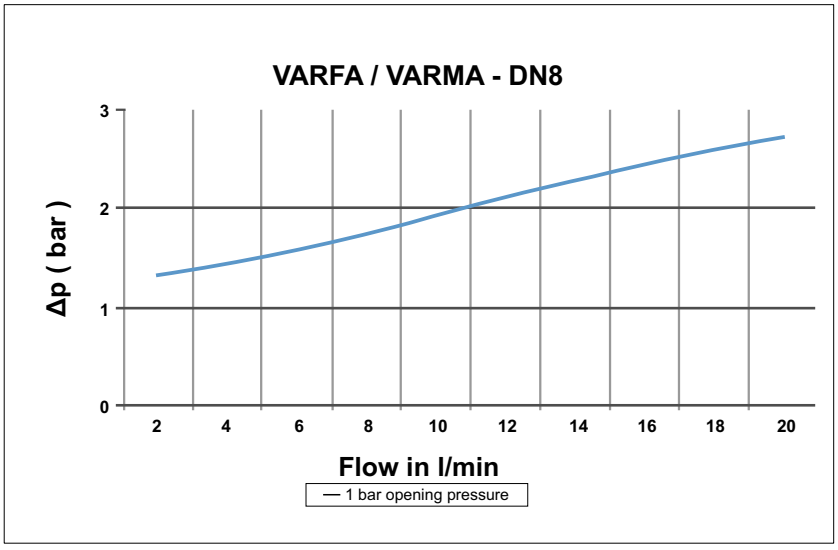

CHECK VALVE (FLOW CHARTS)

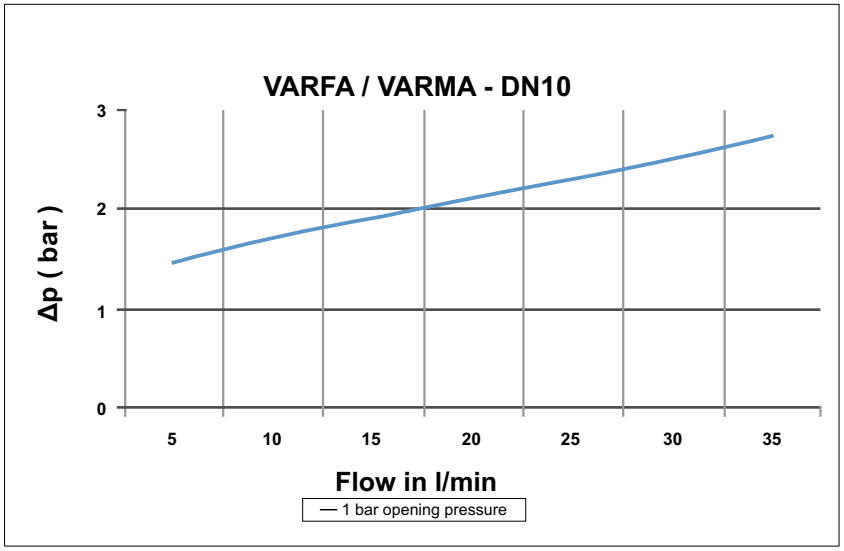

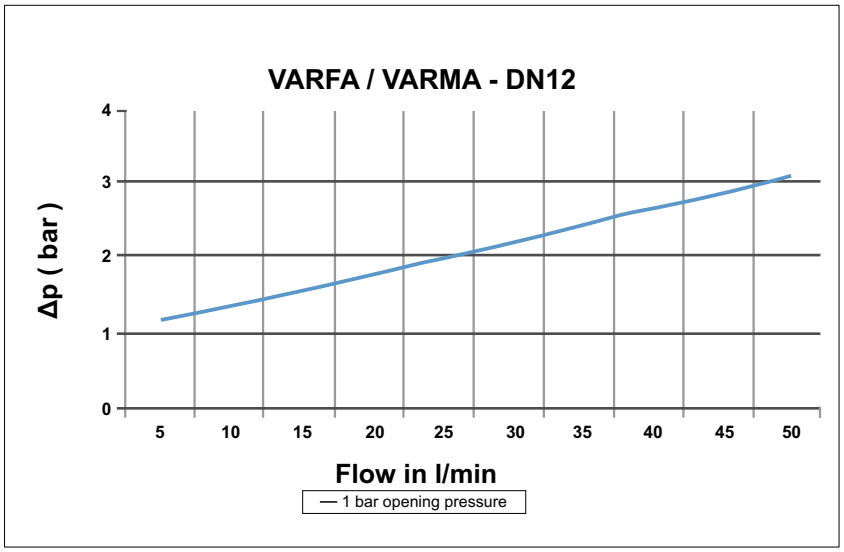

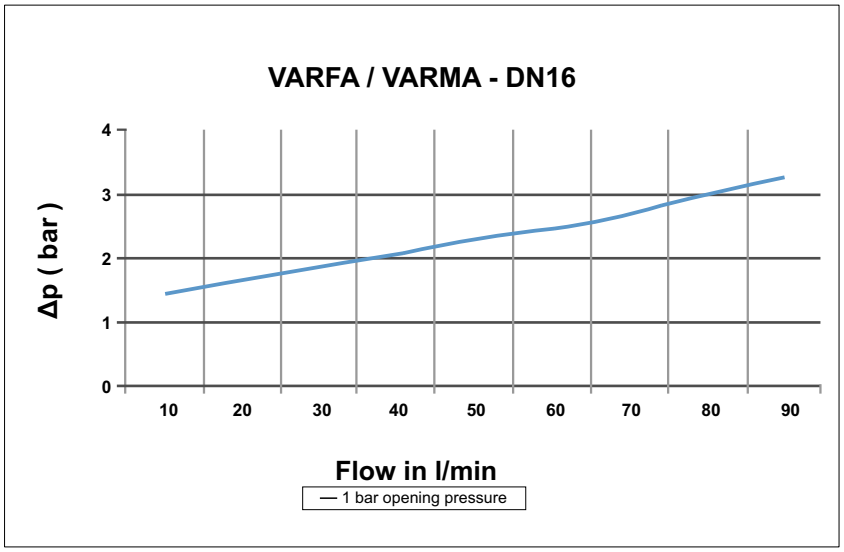

CHECK VALVE (FLOW CHARTS)

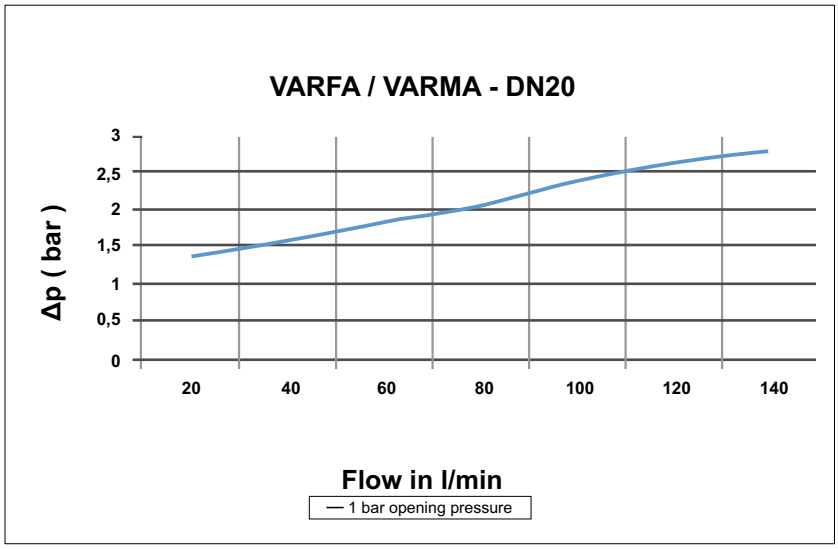

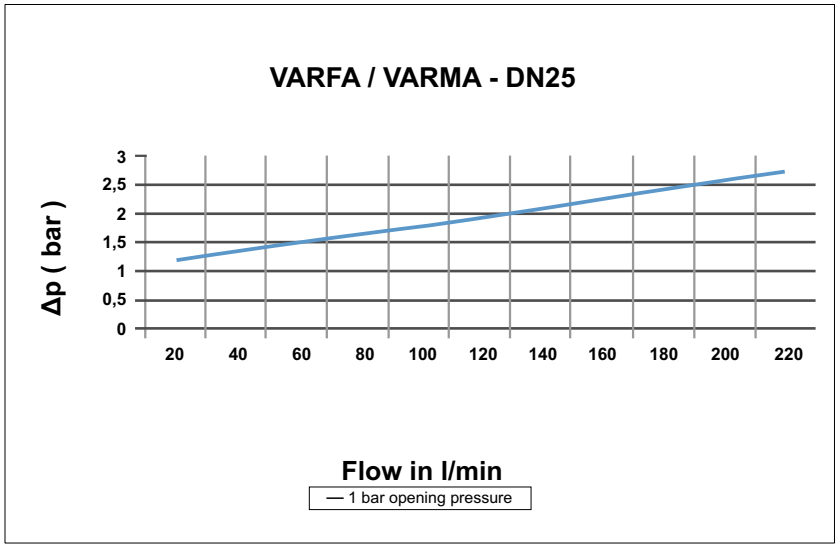

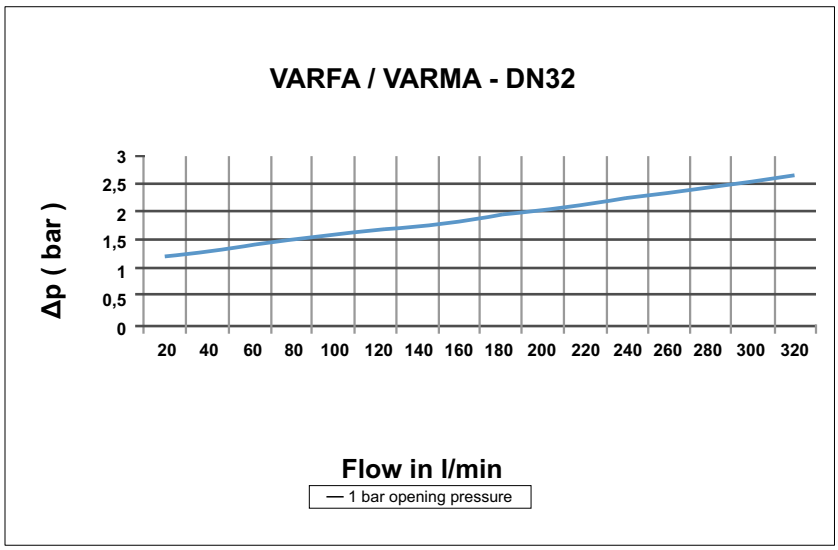

CHECK VALVE (SCREW-IN CARTRIDGE)

All Check Valves are manufactured by GEPF, resulting from the development of products with a high level of technical efficiency, providing an increase in service life and a wide range of mounting options (manifold cavities with direct mounting of the check valve) and connection points (tube-to-tube; male threads, female threads, as well as combinations of different types of connections in the same valve). Also available in special versions for low pressure drops and low flow rates.



Cracking Pressure
1 bar

Surface Treatment
White Trivalent Zinc (Cr VI free)

Maximum Pressure
350 bar

Nominal Flow
até 80 l/min

Seals and Operating Temperature Ranges
NBR / Buna-N (-25°C to 100°C) (-13°F to +212°F) - (Standard)
FKM / Viton (-15°C to 200°C) (5°F to +392°F) - V
EPDM (-40°C to 150°C) (-40°F to +302°F) - E

Materials
Tempered Carbon Steel

Check Valve (Insertable Cartridge) VRCI



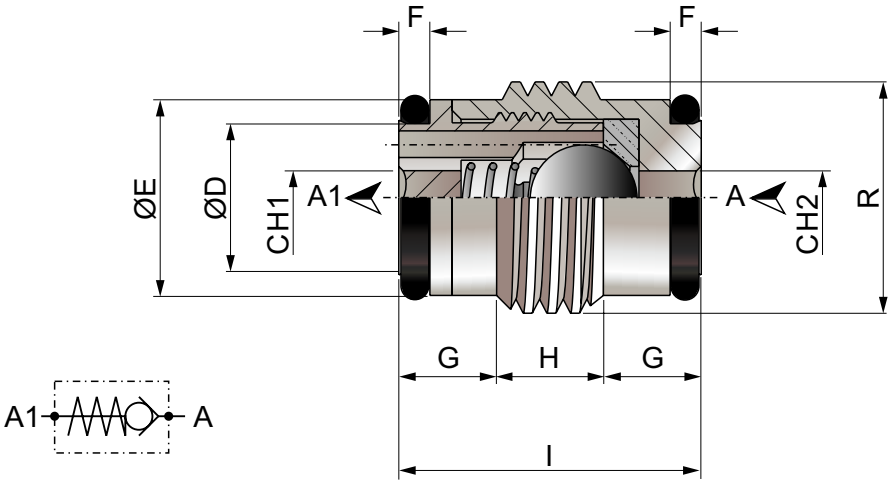

Type	R	D	E	F	G	H	I	CH1	CH2	Oring	Rated Flow	Working Pressure
VRCI 1/4	1/4 BSP	9,2	11,4	1,1	5,5	6,5	17	3	3	9x1	15 l/min	350 bar / 5076 PSI
VRCI 3/8	3/8 BSP	10,9	14,9	2,1	5,6	7,5	18,3	3	4	10,8x1,78	30 l/min	350 bar / 5076 PSI
VRCI 1/2	1/2 BSP	14,2	18,5	2,1	7,2	8,6	22,5	5	6	14x1,78	45 l/min	350 bar / 5076 PSI
VRCI 3/4	3/4 BSP	18,1	24,1	3	7	14,5	28	6	8	17,86x2,62	80 l/min	350 bar / 5076 PSI

Coding Example:

VRCI 1/4 (Check valve with threaded connection size 1/4 BSP).

Material: For AISI 316, add the letter L at the end of the code.

Seals: In Viton EPDM, add the letter V or E at the end of the code.

If a different type of check valve than those shown is required, please contact our technical department.

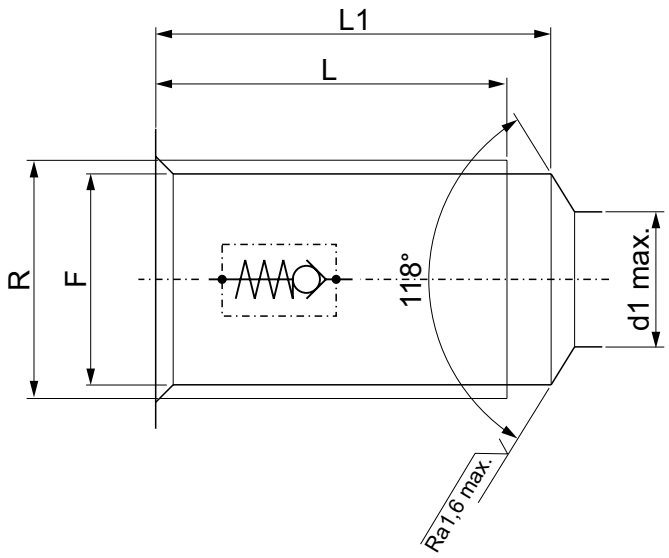

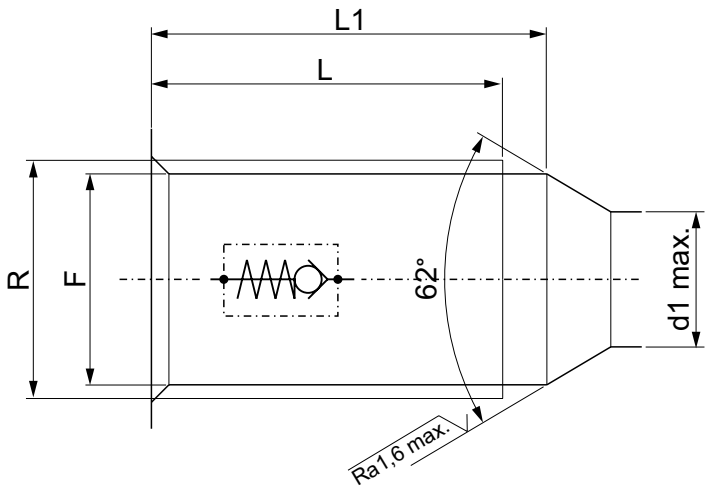

Type	R	F	d1	L	L1	Installation Torque
VRCI 1/4	1/4 BSP	11,8	8	29	26	6 Nm
VRCI 3/8	3/8 BSP	15,2	9	30	27	10 Nm
VRCI 1/2	1/2 BSP	19	12	36	32	20 Nm
VRCI 3/4	3/4 BSP	24,5	16	43	39,5	30 Nm

Mineral Oil Viscosity 24 mm²/sec. (3.5°E) Temperature 50°C

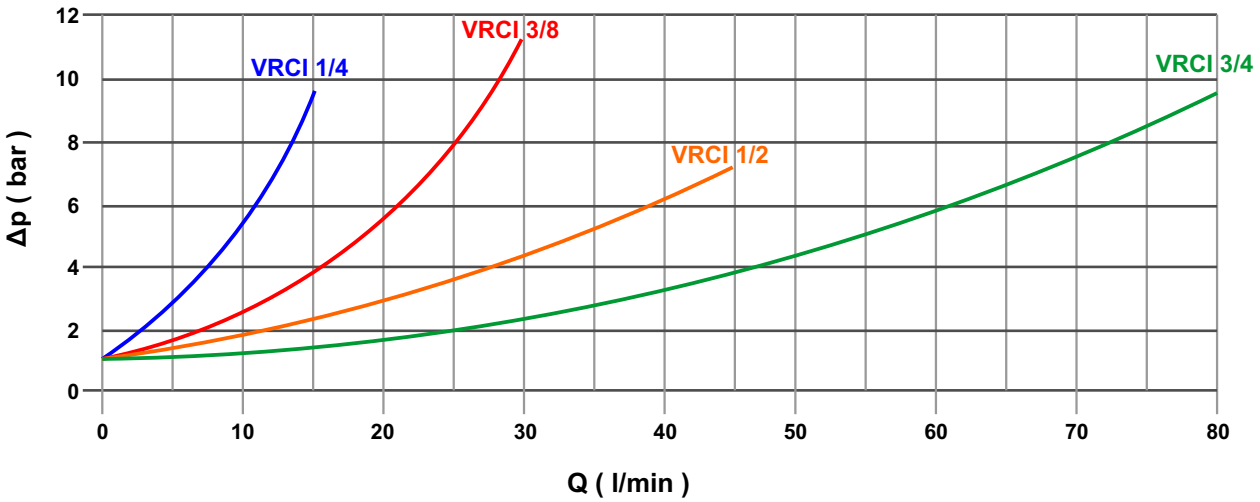



gepef

Pilot Operated Check Valve

PILOT OPERATED CHECK VALVE

The in-line pilot operated check valve allows flow to be blocked in one direction, with this direction being released by pilot pressure. In the opposite direction, flow is free.



Working Pressure
Up to 350 bar / 5075 PSI

Surface Treatment
White Zinc Trivalent Coating Cr VI

Working Temperature Seals
NBR / Buna-N (-25°C to 100°C) (-13°F to +212°F) / Viton

Materials
Carbon Steel
AISI 316 Stainless Steel

VARFAP

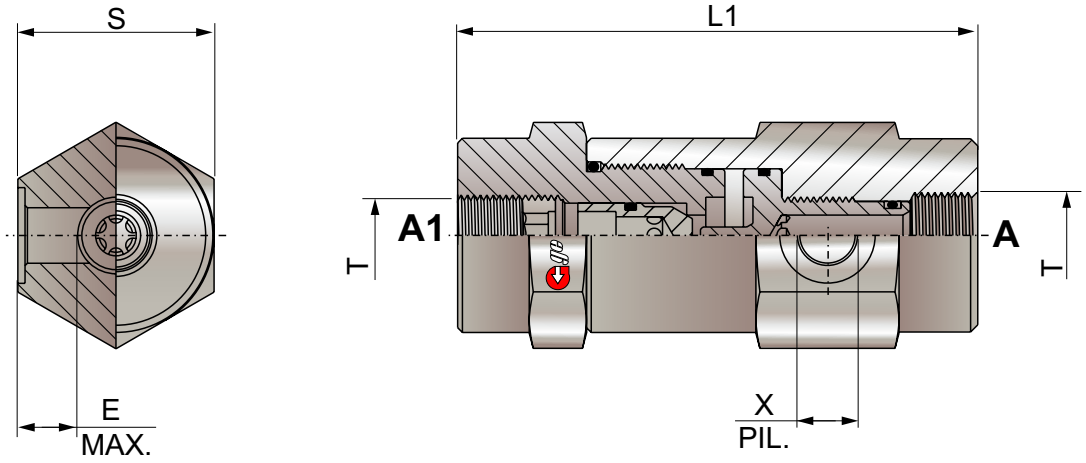



Type	L1	S	T	X	E	Pilot	Max. Flow Rate L/min.	Working Pressure	Weight / kg
VARFAP-14B	103	36	G1/4 BSP	G1/4 BSP	11	1:9	12	350 bar / 5075 PSI	0,65
VARFAP-38B	109	41	G3/8 BSP	G1/4 BSP	11	1:6	30	350 bar / 5075 PSI	0,82
VARFAP-12B	120	41	G1/2 BSP	G1/4 BSP	11	1:4.5	45	350 bar / 5075 PSI	0,96
VARFAP-34B	131	55	G3/4 BSP	G1/4 BSP	11	1:3.7	85	350 bar / 5075 PSI	1,95

Example of Codification:

VARFAP-14B (Pilot Operated Check Valve with G1/4 BSP Female Thread).

For AISI 316 stainless steel material, add the letter I at the end of the code.

For Viton or EPDM seals, add the letter V or E, respectively, at the end of the code.

If another type of valve not listed in this catalog is required, please contact our technical department.

Flow Rate Graphs

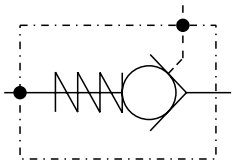

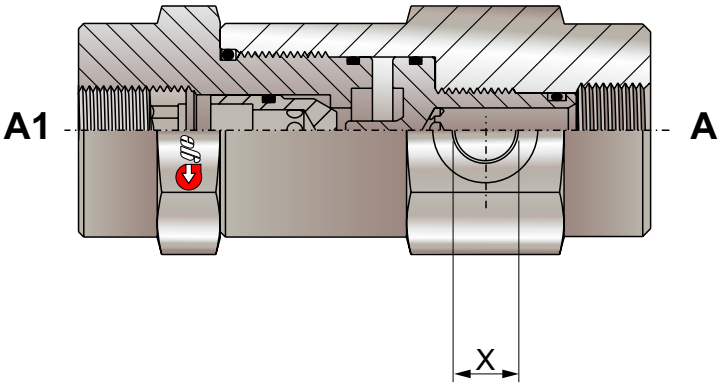

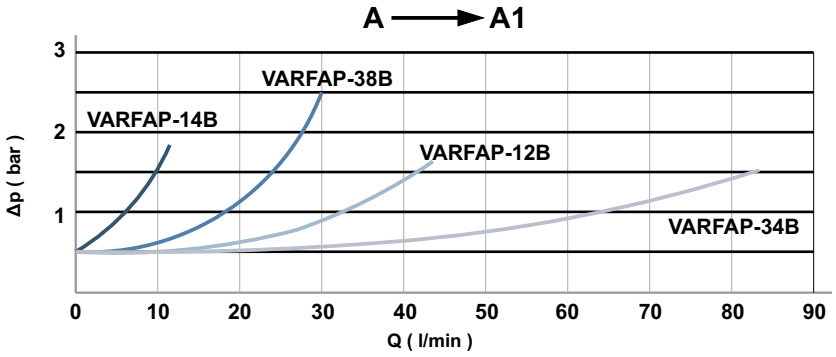

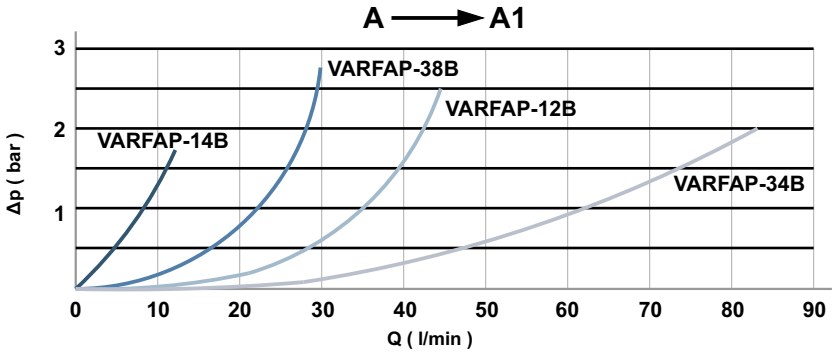



gepef

Safety Valve
(Parachute)

SAFETY VALVE (PARACHUTE)

Safety device applied to critical hydraulic lines which, in the event of hose rupture, immediately and automatically closes the fluid flow once the maximum flow rate is exceeded.
Can be adjusted by the user according to the flow rate.
Supplied in cartridge models or complete assemblies (Cartridge + Housing).
Also available for applications requiring abrupt descent limitation, such as lifting equipment, among others.
In addition to preventing falls caused by hose rupture and connections, it avoids permanent damage to the oil.
Upon request, valves with calibrated orifice for controlled load lowering can be supplied.
All valves are manufactured and commercialized in accordance with GEPEF standards and requirements. Therefore, if you cannot find the required safety valve option in this catalog, please contact us.



Working Pressure
Up to 350 bar / 5075 PSI

Surface Treatment
White Zinc Trivalent Coating Cr VI

Working Temperature Seals
NBR / Buna-N (-25°C to 100°C) (-13°F to +212°F) / Viton

Materials
Carbon Steel
AISI 316 Stainless Steel

Filtration
According to ISO 4406

Viscosity
min. 2.8 mm²/s and max. 800 mm²/s



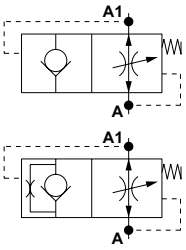

With calibrated orifice

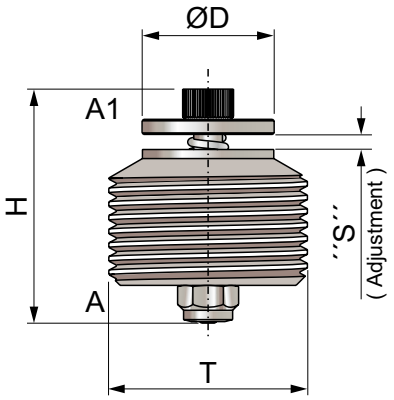

Type	ØD	T	H	´´S´´ Adjustment Range L/M
CR - 1/4	10	G1/4 BSP	17,5	7-30 aprox.
CR - 3/8	12,5	G3/8 BSP	21	10-45 aprox.
CR - 1/2	16	G1/2 BSP	26,3	15-80 aprox.
CR - 3/4	17,5	G3/4 BSP	31,8	28-150 aprox.

HLP Mineral Hydraulic Oil – Viscosity (-24 cSt) at 70°C

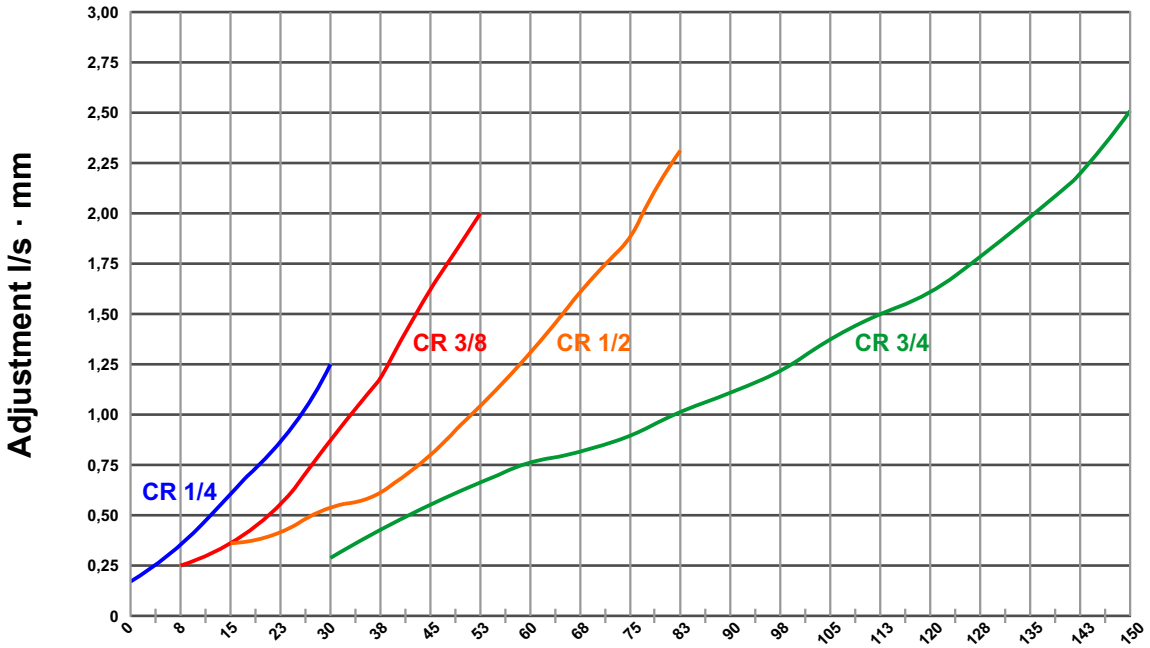

Attention: The adjustment values indicated in the graph are approximate and may vary according to the adjustment range “S”. The reaction tube may vary by 10% depending on the characteristics of the equipment where it is installed.

Example of codification:

CR - 1/4 (Cartridge Safety Valve, adjustment range G1/4 BSP).

Material in AISI 316 stainless steel, add the letter I at the end of the code.

If you require another type of safety valve not listed in this catalog, please contact our technical department.

VBEV-M

Note: The arrow indicates the flow blocking direction.



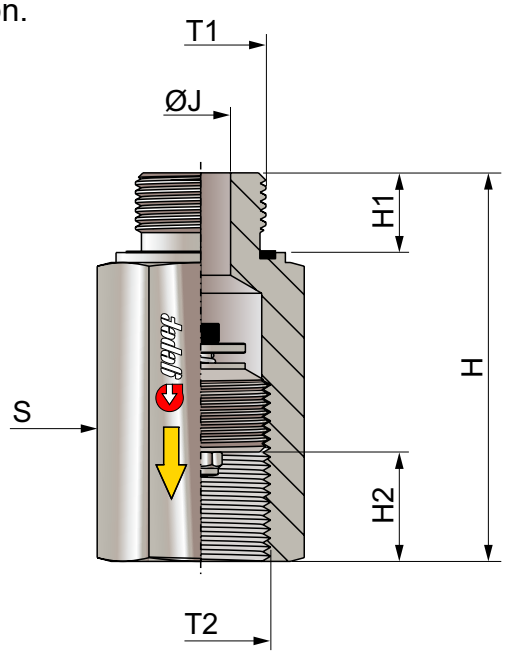

Type	T	H	H1	H2	J	S
VBEV - M1/4	G1/4 BSP	50	10	15	5	19
VBEV - M3/8	G3/8 BSP	55	12	17	8	22
VBEV - M1/2	G1/2 BSP	70	14	18	10,2	27
VBEV - M3/4	G3/4 BSP	78	16	20	12,5	32

WD Form
ISO 1179-2 – BSP Thread
ISO 9974-2 – Metric Thread

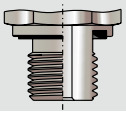

Example of Codification:

VBEV - M3/4 (Male Thread Safety Valve, metric thread G3/4 BSP).

For AISI 316 stainless steel material, add the letter I at the end of the code.

If another type of safety valve not listed in this catalog is required, please contact our technical department.

Note: The arrow indicates the flow blocking direction.



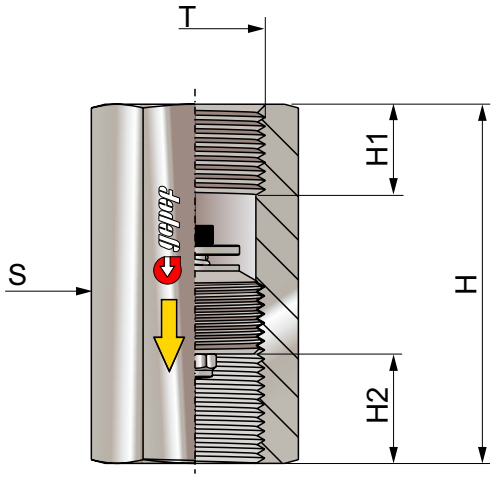

Type	T	H	H1	H2	S
VBEV - F1/4	G1/4 BSP	48	13	15	19
VBEV - F3/8	G3/8 BSP	52	15	17	22
VBEV - F1/2	G1/2 BSP	60	16	18	27
VBEV - F3/4	G3/4 BSP	72	18	20	36

Example of Codification:

VBEV - F1/4 (Female Thread Safety Valve, metric thread G1/4 BSP).

For AISI 316 stainless steel material, add the letter I at the end of the code.

If another type of safety valve not listed in this catalog is required, please contact our technical department.



gepef

Inline Sequence Valve

INLINE SEQUENCE VALVE

Inline sequence valves are used to connect other equipment in sequence, allowing fluid flow up to the required regulated pressure.
Through the check valve in one direction and free flow passage.



Working Pressure
Up to 400 bar / 5800 PSI

Surface Treatmen
Trivalent Zinc Plating (free of Cr VI)

Seals and Operating Temperatures
NBR / Buna-N (-25°C to 100°C) | FKM (+32°F to +212°F)

Materials
Carbon Steel
AISI 316 Stainless Steel



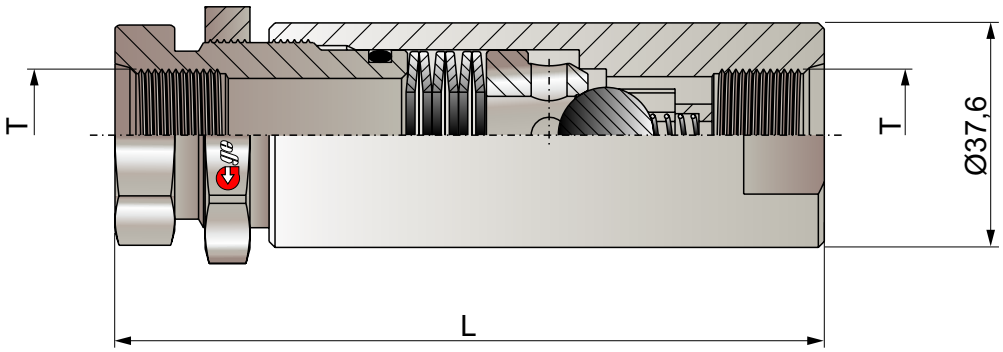

Thread Type: T	L	Adjustment Pressure	Working Pressure
3/4-16 UNF	140	3/4-16 UNF - 05 to 100 bar	400 bar / 5801 PSI
7/8-14 UNF	150	7/8-14 UNF - 05 to 140 bar	400 bar / 5801 PSI
1.1/16-12 UN	160	1.1/16-12 UN - 05 to 140 bar	400 bar / 5801 PSI

Coding Example:

VSL 7/8 UNF (Inline Sequence Valve with 7/8”-14 UNF thread port).

For AISI 316 stainless steel, add the letter I at the end of the code..

For Viton (FKM) or EPDM seals, add the letter V or E at the end of the code.

If another valve type not listed in this catalog is required, please contact our technical department.

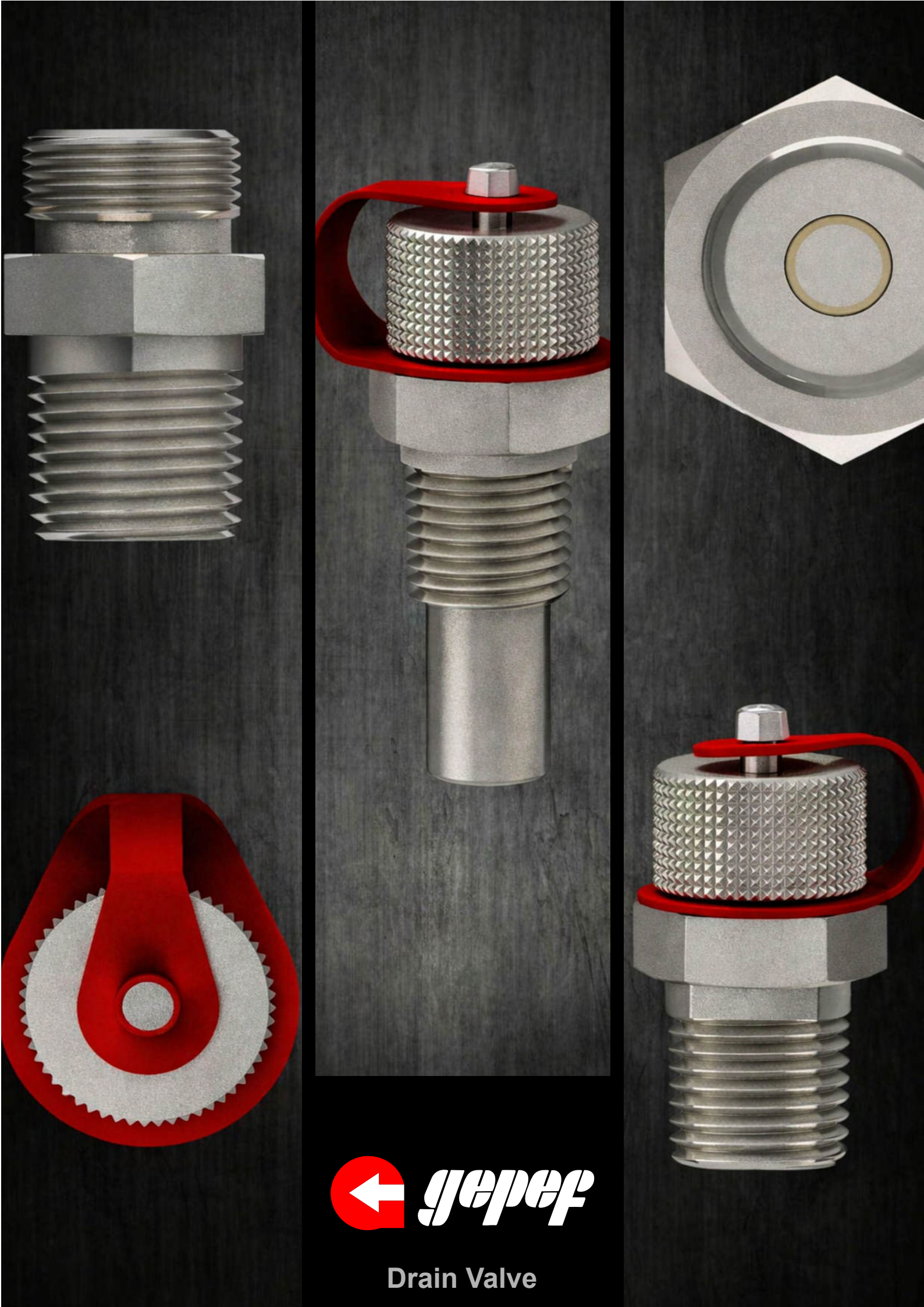

gepef

Drain Valve

DRAIN VALVE

Drain valve designed for draining and collecting high-viscosity fluids under low-pressure conditions. Prevents spillage and reduces the risk of contamination.

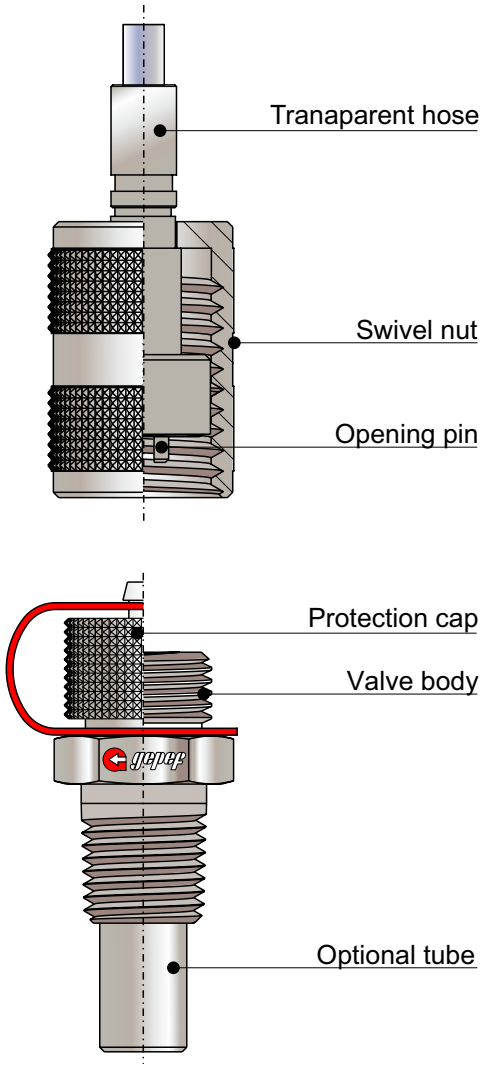

Working Pressure
Up to 200 bar / 2900 PSI

Surface Treatment
White Trivalent (Cr VI Free)

Seals and Operating Temperatures
NBR-Buna-N (-25°C to 100°C) (-13°F to +212°F) - (Standard)
(FKM) Viton (-15°C to 200°C) (-5°F to +392°F) - **V**

Materials
Carbon Steel
Stainless Steel AISI 316



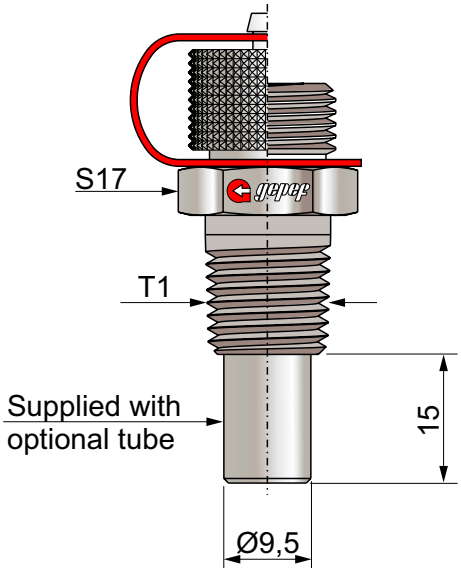

Thread T1	Form
1/4 NPT	C
G1/4 BSP	WD

O Form	C Form	WD Form
ISO 6149-2 / -3 Metric Thread	DIN 3852-2 - BSPT Thread	ISO 1179-2 - BSP Thread
ISO 11926-2 / -3 UNF Thread	ANSI / ASME B1.20.1-1983 - NPT Thread	ISO 9974-2 - Metric Thread
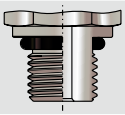	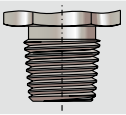	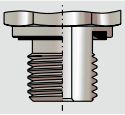

Coding example:

VDR x G1/4 BSP WD (Drain Valve with male G1/4 BSP thread — sealing type WD).

For AISI 316 stainless steel, add the letter I at the end of the code.

For Viton (FKM) or EPDM seals, add the letter V or E at the end of the code.

If a valve configuration not listed in this catalog is required, please contact our technical department.



Manufacturing Facility

+ 55 15 3264-1222

gepef@gepef.com.br

www. gepef.com.br

Avenida do Trabalhador, 1.680
ZIP Code 18552-100 - Boituva - SP
Brazil

Head Office & Operations Center

Av. Antônio Ângelo Amadio 681
ZIP Code 18552-112 - Boituva - SP
Brazil

Branch Office – Belo Horizonte, MG – Brazil - Regional sales operations for Minas Gerais and Brazil's Central-West Region

+ 55 31 3327-4459

gepef-bh@gepef.com.br

www.gepef.com.br

Avenida Professor Mário Werneck, 300
(10th Floor – Room 1004 – Tower 2) – Estoril District
ZIP Code 30455-610 - Belo Horizonte - MG
Brazil

Developed by: JDM Digital Mídia +55 11 99286 0900