

gepef

Hydrogen refueling connectors

All rights reserved

© All rights reserved, WEH GmbH Verbindungstechnik.
Any unauthorized copying, distribution or other use of the copyrighted content is strictly forbidden without the written consent of WEH GmbH Verbindungstechnik.
Upon transmission of a newer version of this document, all previous versions are no longer valid. In principle, the latest version of the document is valid. This can be found at www.weh.com.
Our General Terms and Conditions and the Agreement on Protection of Know-How and Quality Assurance (www.weh.com) shall apply to deliveries and other services, unless expressly agreed otherwise.
We do not accept any General Terms and Conditions of the purchaser.
WEH® is a registered trademark of WEH GmbH Verbindungstechnik.

INDEX

Section	Title	Page
1	H_2 Fueling components	6
1.1	Introduction	6
1.2	Overview	10
2	Product line 70 MPa fueling station	14
2.1	Fueling nozzle TK20-S1 H_2 70 MPa ENR	14
2.2	Fueling nozzle TK20-S1 H_2 70 MPa	20
2.3	Breakaway coupling TSA30-S1 H_2 70 MPa	26
2.4	Breakaway coupling TSA31-S1 H_2 70 MPa	30
3	Product line $_{70}$ MPa vehicles (fueling station)	34
3.1	Receptacle TN9-S1 H_2 70 MPa	34
3.2	Check valve TVR1 H_2 70 MPa	38
4	Product line 35 MPa fueling station	40
4.1	Fueling nozzle TK20-S2 H_2 35 MPa ENR	40
4.2	Fueling nozzle TK20-S2 H_2 35 MPa	46
4.3	Fueling nozzle TK20-S3 H_2 35 MPa ENR Medium-Flow	52
4.4	Fueling nozzle TK20-S3 H_2 35 MPa Medium-Flow	58
4.5	Fueling nozzle TK16 H_2 ENR	64
4.6	Fueling nozzle TK16 H_2	68
4.7	Fueling nozzle TK16 H_2 High-Flow com interface de dados	72
4.8	Fueling nozzle TK16 H_2 High-Flow	76
4.9	Breakaway coupling TSA1 H_2	80
4.10	Inline breakaway coupling TSA2 H_2	86
4.11	Fueling nozzle TK25 H_2	90
4.12	Breakaway coupling TSA5 H_2	94
4.13	Inline breakaway coupling TSA6 H_2	98

INDEX

Section	Title	Page
5	Product line $_{35}$ MPa vehicles (fueling station)	100
5.1	Receptacle TN9-S2 H_2 35 MPa	100
5.2	Receptacle TN9-S3 H_2 35 MPa Medium-Flow	104
5.3	Receptacle TN1 H_2	108
5.4	Receptacle TN1 H_2 High-Flow	112
5.5	Receptacle TN5 H_2	116
5.6	Check valve TVR_1 H_2	118
5.7	Check valve TVR5 H_2	120
6	Filter vehicle and fueling station	122
6.1	Filter TSF2 H_2	122
6.2	Coalescing filter TSF2 H_2	124
6.3	Filter TSF4 H_2	128
7	Accessories	130
7.1	Defueling nozzle TK6 H_2	130
7.2	H_2 Hoses	134
7.3	Service receptacle TNS10 H_2	138
7.4	TW850-S60 H_2	142
7.5	Manifold block TMF900-S1 H_2	146
8	Further information	148
8.1	Technical appendix	151

WEH® H_2 Fueling components

Excellent quality for maximum reliability

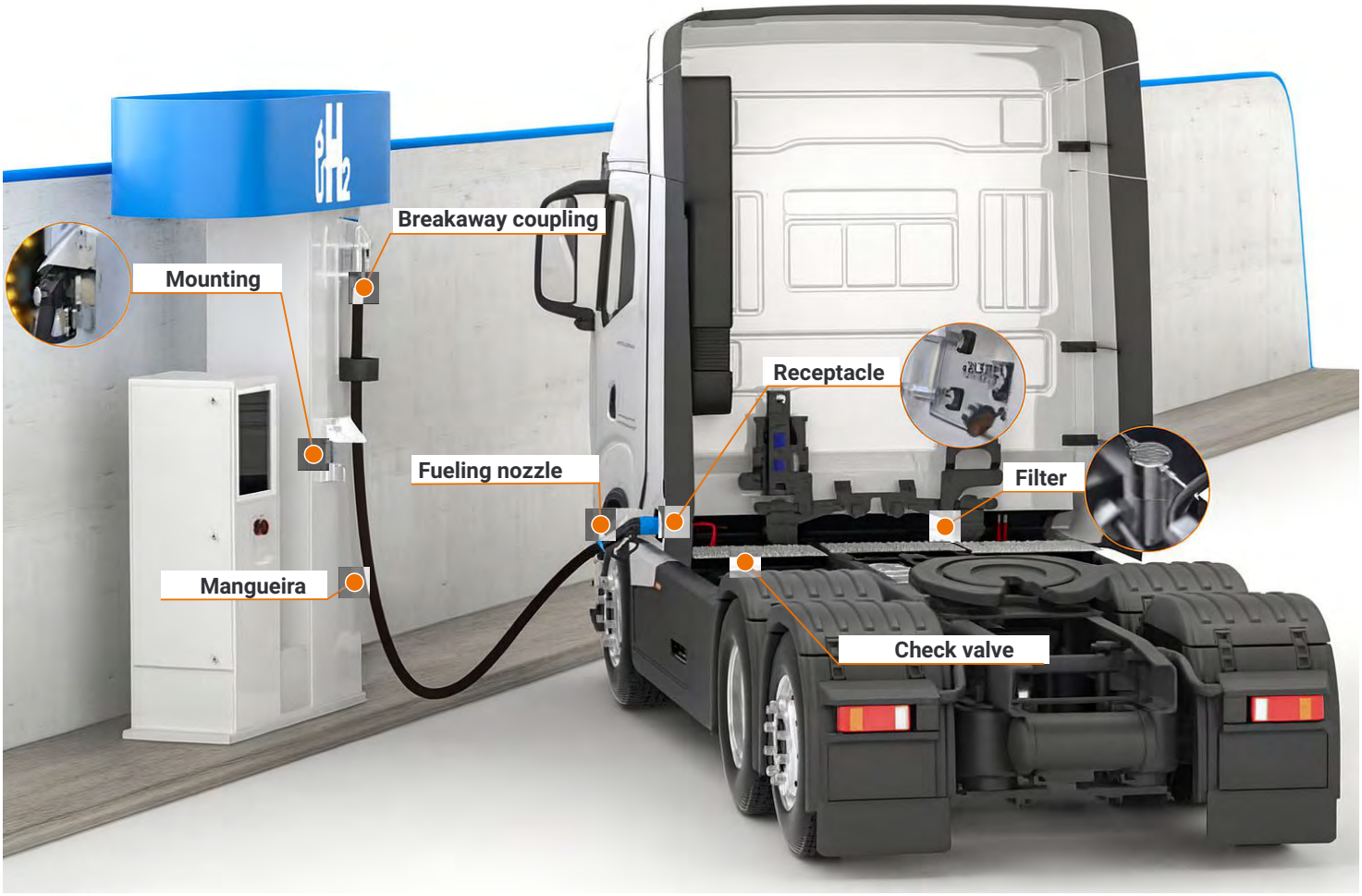



1.1 Introduction

WEH recognized early on that the regenerative energy source hydrogen has a future and developed the first hydrogen refueling components more than 25 years ago.
As a pioneer, WEH set international standards.
Today, hydrogen fueling stations and fuel cell vehicles all over the world are almost exclusively equipped with WEH® refueling components.

We are a reliable partner to many industries
Thanks to intensive research and development, WEH has become a reliable and highly valued partner to the automotive industry in this cutting-edge technology.
Our products can easily withstand pressures of up to 1,000 bar. Because high pressure has always been our passion.
WEH high-pressure components also impress with their reliability and safety in many other sectors, such as mechanical engineering, the chemical and gas industry, refrigeration and air conditioning technology.

Everything from a single source with WEH
Today, WEH develops, produces and distributes a complete product line for hydrogen refueling. From filling couplings, breakaway couplings, filling hoses and filters at the filling station to tank nipples and non-return valves in the vehicle.
WEH‘s innovative refueling solutions have contributed to a much better acceptance in society. Our product solutions are a healthy mix of innovation and tradition and ensure that the driver has a familiar refueling experience.

We focus on the future
Driven by our passion, intensive research and extensive investments, we continue to work on Innovative products for the future market of hydrogen refueling.



Our **mission**

For more than 25 years, we have been developing future-oriented H_2 refueling technology solution. Pioneering is deep in our DNA, so when it comes to hydrogen: we lead at the frontier.

Our **Goal**

We strive to meet (and delightfully exceed) our customers' expectations--from design to service. By consistently delivering high-quality, safe and user-friendly products, this goal has grown to become our promise.



Innovate H_2 Products for real-world applications

Our product solutions touch all aspects of the refueling process. Receptacles, check valves and filters for vehicles. H2 systems, ‘up to fueling’ nozzles, breakaway couplings, filters, check valves and hoses for fueling stations. Whatever your hydrogen need, we have you covered.

WEH® H_2 Components Your benefits

- Balanced design
- Unique user-friendliness
- Highest functionality and safety
- Reliability & efficiency
- High flow rate
- Short filling times
- Optimum protection for operators and components
- Minimal downtime
- Low maintenance requirements
- Robust & durable



Our Core Competencies

Global Sales Network
Active in 60+ countris

Passion for High-Pressure
Components for multiple industries

World-Class Engineering
To meet specific product needs on request

In-house Teste Center
Extensive testing during development

Pioneers – We set the Standard
Trailblazing product solutions

Goods Issue Inspection
We inspect each product individually

50+ years Experience
More than 25 of those spent innovating in the hydrogen sector

Quality – Made in Germany
ISO 9001:2015
ISO 14001:2015
Pressure Equipment Directive 2014/68/EU Annex III, Module H

Environmental Management
Sustainable products and actions

Service & Maintenance
Directly from the manufacturer

Maximum Safety
Through exceptional products and high-quality materials

Sophisticated systems
for a demanding application
The WEH® hydrogen product line was developed to meet the requirements of high pressures in the refueling area. All components are designed to with stand extreme flow rates and temperature conditions.

Test laboratory
Modern testing facilities guarantee comprehensive testing of our products from the design phase through to series production. Our 100 % quality assurance is second to none.

Unique jaw locking mechanism
All filling couplings have the jaw locking mechanism developed by WEH. The collets are insensitive to contamination and the low surface pressure minimizes wear.

More safety through filter technology
Our integrated dirt filter prevents dirt particles ingress of dirt particles from the outside in order to leaks as far as possible.

The right decision with certainty
WEH® hydrogen products have a high safety standard. This is the only way self-service operation is even possible.

FUELING NOZZLES / BREAKAWAY COUPLINGS

And their common uses:

Overview fueling nozzles			
Product family	Page	Car	Bus/truck
TK20-S1 H_2 70 MPa ENR	14	✓	✓
TK20-S1 H_2 70 Mpa	20	✓	
TK20-S2 H_2 35 MPa ENR	40	✓	
TK20-S2 H_2 35 Mpa	46	✓	
TK20-S3 H_2 35 MPa ENR Medium-Flow	52		✓
TK20-S3 H_2 35 MPa Medium-Flow	58		✓
TK16 H_2 35 MPa EN	64	✓	
TK16 H_2 35 MPa	68	✓	
TK16 H_2 High-Flow with data interface	72		✓
TK16 H_2 High-Flow	76		✓
TK25 H_2	90		✓

Overview defueling nozzles		
Product family	Page	Discharging of H_2 fuel tanks - car
TK6 H_2	130	✓

Overview breakaway couplings					
Product family	Page	Car	Car - Inline	Bus/truck	Bus/truck fueling station
TSA30-S1 H_2 70 MPa	26	✓			
TSA31-S1 H_2 70 MPa	30		✓		✓
TSA1 H_2	80	✓		✓	
TSA2 H_2	86		✓		✓
TSA5 H_2	94			✓	
TSA6 H_2	98				✓

FILTERS

Overview filters					
Product family	Page	Car	Bus/truck	Car fueling station	Bus/truck fueling station
TSF2 H_2	122	✓	✓	✓	✓
TSF2 H_2 Koaleszenz	126	✓	✓	✓	✓
TSF4 H_2	128	✓	✓	✓	✓

PRESSURE RANGE / CODING

All WEH® Fueling nozzles and receptacles have a coding for gas type and the pressure range thus not allowing connection to natural gas vehicles and other pressure ranges. The following connection possibilities are given:

OVERVIEWI	Receptacle	TN1 H25	TN9-S2 H35 TN1 H35	TN9-S3 H35 Medium-Flow TN1 H35 High-Flow	TN9-S1 H70	TN5 H35
Fueling nozzle	Pressão PN	25 MPa	35 MPa	35 MPa	70 MPa	35 MPa
TK16 H_2	25 MPa	✓	✓	✓	✓	
TK16 H_2 35MPa TK16 H_2 35 MPa ENR**	35 MPa		✓	✓	✓	
TK16 H_2 Alto fluxo TK16 H_2 Alto fluxo com IR*	35 MPa			✓		
TK20-S2 H_2 35 MPa TK20-S2 H_2 35 MPa ENR**	35 MPa		✓	✓	✓	
TK20-S3 H_2 35 MPa Fluxo Médio TK20-S3 H_2 35 MPa ENR** Fluxo Médio	35 MPa			✓		
TK20-S1 H_2 70 MPa TK20-S1 H_2 70 MPa ENR**	70 MPa				✓	
TK25 H_2	35 MPa					✓

* IR = Infrarot-Datenschnittstelle / ** ENR = austauschbare Infrarot-Datenschnittstelle

Note on ISO 17268-1:2025 Standard:
With the publication of ISO 17268-1:2025, the designation and coding of the H35 High-Flow receptacles and nozzles will change. The applicable coding for each product is specified in the respective article.
Our new products, the TK20 Fueling nozzle and TN9 Receptacle, already comply with the updated coding according to ISO 17268-1:2025.
For the TK16 Fueling nozzle and TN1 Receptacle, the coding is still based on ISO 17268:2012.
If you have any questions, our Sales Team will be happy to assist you.

INTERNATIONAL STANDARDS AND APPROVALS

The following overview shows the standards for which WEH® Products can be certified. For detailed information see respective product.

- Regulation (EC) No. 79/2009*
- ISO 17268
- SAE J2601
- TEX, NEC, KTL, CC

* All products with EC79 approval are also suitable for use in stationary systems.
When using the products in stationary systems, please check the necessity of a conformity assessment procedure acc. to the Pressure Equipment Directive 2014/68/EU and contact us if corresponding documentation is required.
Please also refer to the note on page 116, Explanation on the Pressure Equipment Directive.

For reasons of precaution, we'd like to point out that

a) regarding the delivery of each article acc. to the respective order confirmation - in particular concerning ECE / EC79 articles - WEH does not confirm the fulfilment of additional requirements of the concerned end customer,

b) WEH is not subject to any external reporting obligation with regard to external change management (see page 114) and

c) WEH does not confirm the replacement of the product in the form of a regular series delivery.
Exclusions acc. to a) - c) can be agreed with the conclusion of a customer-specific project with corresponding special conditions.

CERTIFIED QUALITY MANAGEMENT

Our high quality standards are achieved by a practiced quality management and confirmed by certification according to international quality standards.

- **Quality Management System DIN EN ISO 9001:2015**
- **Environmental Management System DIN EN ISO 14001:2015**

MEMBERSHIPS

WEH is a member of the German Hydrogen and Fuel Cell Association and the Hydrogen.Bavaria Center (H2.B).

OUR COMMITMENT TO AN EMISSION-FREE FUTURE

Today, WEH is the global market leader with its refueling systems and a partner to the automotive industry. In addition, WEH is involved in numerous national and international projects worldwide to promote alternative drives and is therefore also a driving force for a mobile society with a future.

We present three of these exciting projects here. They are examples of numerous inquiries and our commitment, which we are happy to continue.



Full throttle on the race track
We are involved in numerous projects around the world to promote alter native fuels in order to realize a climate-neutral future and environmentally friendly mobility.

Among other things, we support the Forze racing team of the Dutch University of Delft with 70 MPa components for a hydrogen-powered powered racing car.



Hydrogen on the water
The Dutch HydroMotion team at Delft University has developed the first hydrogen boat “Flying Hydrogen Boat”. As a leading manufacturer of refueling components for hydrogen, we were delighted to support the student project.

We have provided these WEH® products free of charge:

- **WEH® Check Valve TVR1 H_2**
- **WEH® Receptacle TN1 H_2**

The Yacht Club has awarded the HydroMotion team the “Next Generation Prize” for this innovative and progressive project.



With pressure on the rails
The world‘s first hydrogen train for regional transportation was unveiled in 2016. It runs near Bremerhaven.

The “Coradia iLint” train developed by the French train manufacturer Alstom is equipped with WEH® TN1 H2
35 MPa receptacle. On the roof of
the train, the fuel cells convert the hydrogen carried in the tank
hydrogen into electrical energy and thus provide the propulsion. The train is of course refueled using the WEH® TK16 H2
35 MPa fueling nozzle.

Description



Features
- Type C nozzle acc. to SAE J2600 resp. ISO 17268
- Very high flow rate
- Easy operation / single-handed operation
- Max. allowable operating pressure (MAWP according to ISO 19880-1:2020)
- Exchangeable data interface (ENR)
- Integrated purging line for nitrogen flushing
- Prepared for dispenser mounting with purging system
- WEH® EASY-TURN 250° swivel joint
- Protecion against impact and cold
- Plastic thermal protection
- Hand grip with magnet
- Compatible with pressure stage H70 according to ISO 17268 (see table below)

new

The WEH® TK20-S1 H_2 70 MPa ENR Fueling nozzle with exchangeable data interface (ENR = exchangeable nozzle receiver) was developed for fast filling of cars with compressed, gaseous hydrogen (CGH2). Through to the larger nominal width, refueling with 90 g/s or higher is possible. In addition, this filling coupling is designed for a maximum operating pressure of 96.25 MPa (= MAWP according to ISO 19880-1:2020)

In addition, the new TK20-S1 H_2 70 MPa ENR has the same tried and tested features as the already well-known TK17 H2 70 MPa ENR.
The fueling nozzleis additionally equipped with a purging line that allows purging with nitrogen during and after refueling process. This can prevent ingress of moisture and the formation of ice crystals during filling with precooled.

The WEH® TK20-S1 H_2 70 MPa ENR offers optimum safety for the operator thanks to the locking mechanism. The Fueling nozzle remains connected to the receptacle until the locking mechanism is released by the operator.

TN H_2 (Except TN5 H_2)

TK20-S1 H_2 70 MPa ENR	25 MPa	35 MPa	35 MPa MF*	35 MPa HF**	70 MPa
70 MPa					✓

*MF = Medium-Flow acc. to ISO 17268-1:2025
** HF = High-Flow acc. to ISO 17268:2012

Application
Fueling nozzle for hydrogen fast filling of cars at self-service fueling stations.

Technical data

Characteristics	Basic version
Flushing line male / female thread	6/4 mm
Nominal pressure	PN = 70 MPa
Max. Allowable Operating Pressure	MAWP = 96.25 MPa according to ISO 17268 (PS = 962.5 bar)
Media Temperature Range	-40 °C up to +85 °C
Ambient Temperature Range	-40 °C up to +85 °C
Material	Corrosion resistant
Sealing Material	Hydrogen resistant
Nozzle Type	Type C acc. to SAE J2600:2015 and previous resp. ISO 17268:2020 and previous
Coding	H70 Grade D acc. to ISO 17268-1:2025
Design	With plastic thermal protection, cold protection, hand grip with magnet, exchangeable data interface acc. to SAE J2799 and integrated purging line
Weight	Approx. 2.65 kg
Medium for Purging*	Nitrogen or compressed air
Media Temperature Range Purging Medium*	-40°C to +85°C (most effective above 0°C)
Hydrogen flow rate	90 g/s at 8 MPa pressure drop (F90-P8) Pressure drop values for 120 g/s on request
Flow Rate During Purging	500 Nl/h at max. 12 bar purging pressure
Conformity / Tests / Approvals	IR data interface: SAE J2799 and ATEX, NEC, KTL or CCC Design validation based on ISO 17268-1:2025

* The efficiency of the purging line has been successfully tested in compliance with the freezing test 7,26 from ISO 17268

Ordering - WEH® TK20-S1 H_2 70 MPa ENR Fueling nozzle

approx. dimensions (mm)

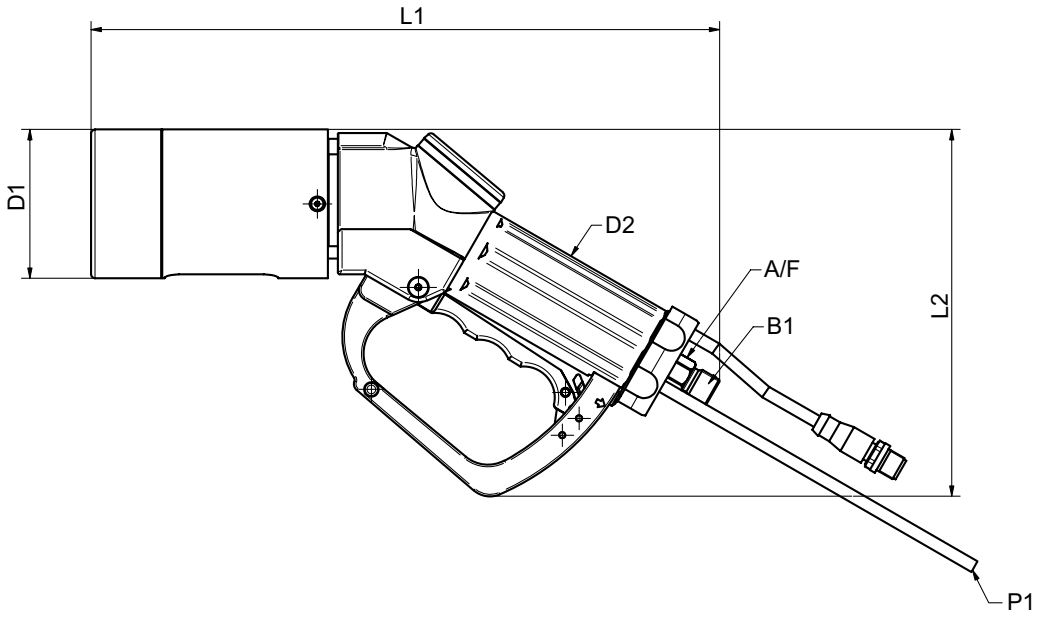

Part no.	Description	Pressure (MAWP)	B1 (male thread)	P1	L1	L2	D1	D2	A/F
C1-188722	TK20-S1H_2 70MPa ENR	96.25 MPa	UNF 9/16"–18 *	Ø 6	304	177	72	46	15

* 60° inner cone
Fueling assemblies consisting of fueling nozzle, hose set and breakaway coupling are available on request.

Accessories

The following accessories are available for the WEH® TK20-S1 H_2 70 MPa ENR Fueling nozzle:

Complete set consisting of Fueling nozzle TK20-S1, Breakaway coupling TSA30-S1 and Hose set.

The TK20-S1 Complete set set new standards: thanks to improved flow characteristics, it offers a 40 % lower pressure drop at a flow rate of 90 g/s.

Part. no.	Description
On request	Complete set TK20-S1



*Values may vary depending on the test setup (e.g. Hose length, receptacle).

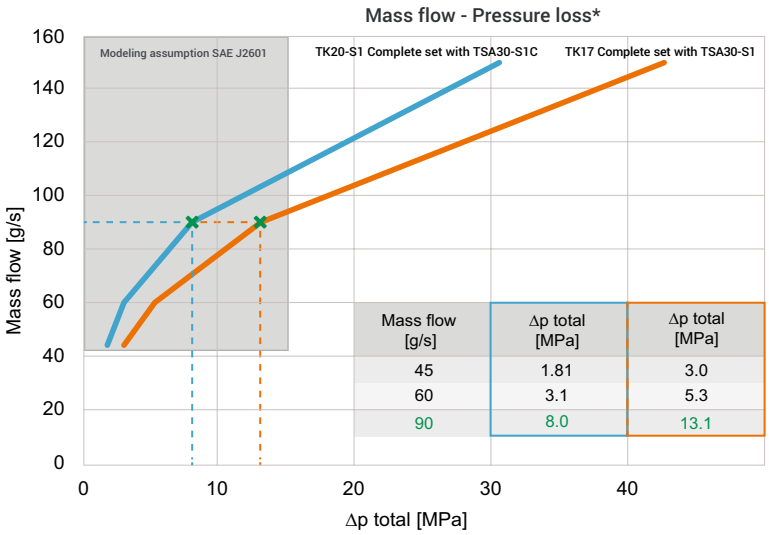

Hose set

Hose set for connecting fueling nozzle and TSA30 H_2 70 MPa breakaway coupling, complete with filling hose, data cable, purging line and braided protection hose as cover.
Design filling hose: max. operating pressure PS: 96.25 MPa / nominal bore fitting (TNW): 4.5 mm / media temperature range: -40 °C up to +85 °C



Part no.	B1/B2 (female thread)	P1 / P2	Hose length
E68-161886	UNF 9/16“-18*	Ø6	3 m
E68-161887	UNF 9/16“-18*	Ø6	4 m
E68-161888	UNF 9/16“-18*	Ø6	5 m

* DKJ 58°

Dispenser mounting

The fueling nozzle can also be used with a dispenser mounting, which is installed on the fuel dispenser.
Advanced dispenser mounting for fueling nozzles
With inductive sensor and M12x1 connector, explosion-proof according to ATEX

approx. dimensions (mm)



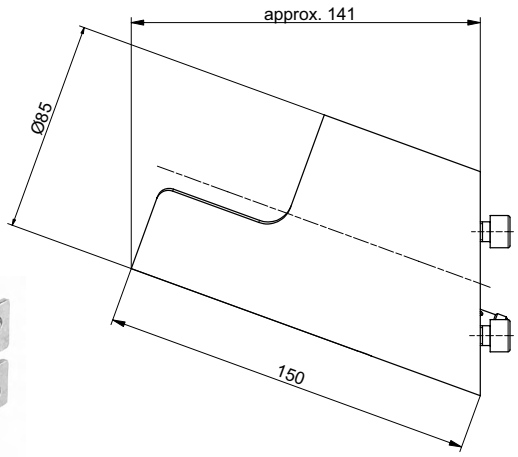

mounting bracket

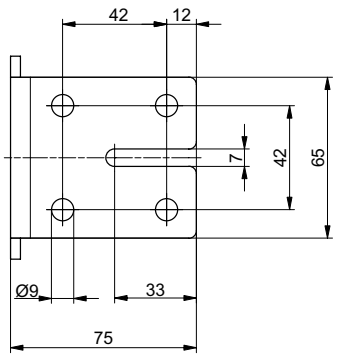

Part no.	Description
C1-190361	Dispenser mounting for TK20 H_2 (Including mounting bracket, installable in three different designs)

Classic dispenser mounting for fueling nozzles

With magnetic field sensor and 2 m cable, explosion-proof according to ATEX

approx. dimensions (mm)



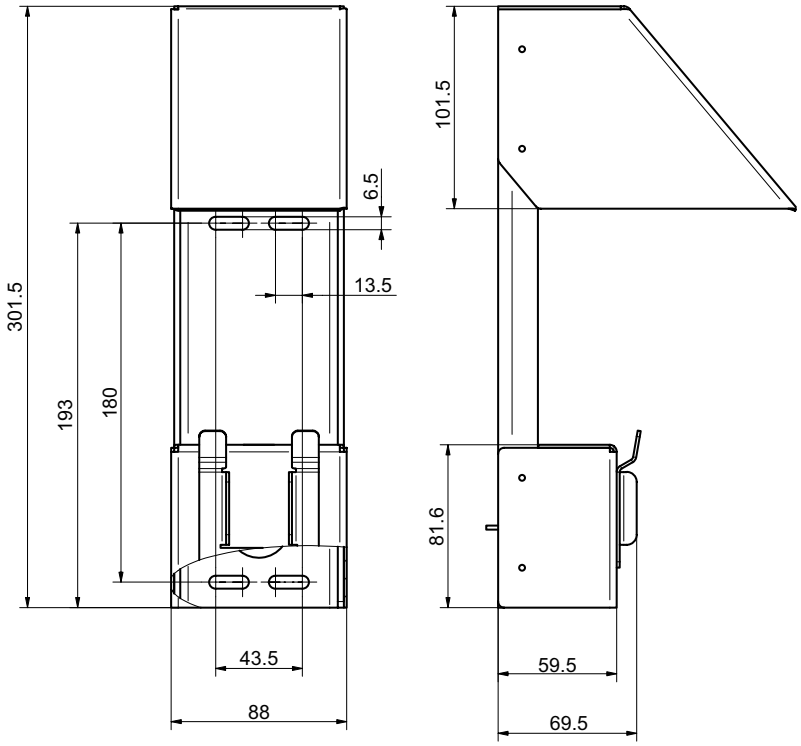

Part No.	Description
C1-191367	Dispenser mounting for TK20 H_2

Service receptacle WEH® TNS1 H_2

To prevent damage in the fueling nozzle while leak testing during maintenance in the course of which pressure is applied, we recommend the use of a service receptacle. The receptacle also protects the fueling nozzle from dirt ingress whilst not in use.



Part no.	Description	Pressure (MAWP)
C1-148079	TNS1 H_2 Service receptacle incl. protection cap	87,5 MPa

WEH® Breakaway coupling

For the suitable TSA30-S1 H_2 70 MPa breakaway coupling, please see page 26.

Data cable

Part no.	Description	Hose length
E68-96194	Data cable suitable for 4 m hose set	4,45m
E68-96193	Data cable for connecting with the converter	3,45m

Other lengths on request

Spare parts

Various parts are available as spares for the WEH® TK20-S1 H_2 70 MPa ENR Fueling nozzle.



Position	Part No.	Description
1	W186127	Impact protection sleeve
2	W172310	IR data interface ATEX, NEC, KTL or CCC
3	E80-84030	Locking lever
4	E69-161748	Logo cap
5	W124542	Hand grip
6	E80-59738	Logo plate
7	W186082	Clamping nut for protective hose
8	E69-157491	Label
10	C1-161187	Handle protector
	On request	Maintance spray

When ordering please specify the part no. engraved on the fueling nozzle.

Description



Features
- Type C nozzle acc. to SAE J2600 resp. ISO 17268
- Very high flow rate
- Easy operation / single-handed operation
- Max. allowable operating pressure 96.25 MPa (MAWP according to ISO 19880-1:2020)
- Integrated purging line for nitrogen flushing
- WEH® EASY-TURN 250° swivel joint
- Optimized impact protection
- Plastic thermal protection
- Hand grip with magnet
- Compatible with pressure stage H70 according to ISO 17268-1:2025 (see table below)

new

The WEH® TK20-S1 H_2 70 MPa Fueling nozzle was developed for fast filling of cars with compressed, gaseous hydrogen (CGH2). Through to the larger nominal width, refueling with 90 g/s or higher is possible. In addition, this filling nozzle is designed for a maximum operating pressure of 96.25 MPa (= MAWP according to ISO 19880-1:2020).

I n addition, the new TK20-S1 H2 70 MPa has the same tried and tested features as the already well-known TK17 H2 70 MPa.

The fueling nozzle is additionally equipped with a purging line that allows purging with nitrogen during and after refueling process. This can prevent ingress of moisture and the formation of ice crystals during filling with precooled hydrogen.

The WEH® TK20-S1 H_2 70 MPa offers optimum safety for the operator thanks to the locking mechanism. The Fueling nozzle remains connected to the receptacle until the locking mechanism is released by the operator.

TN H_2 (Except TN5 H_2)

TK20-S1 H_2 70 MPa	25 MPa	35 MPa	35 MPa MF*	35 MPa HF**	70 MPa
70 MPa					✓

*MF = Medium-Flow acc. to ISO 17268-1:2025
**HF = High-Flow acc. to ISO 17268:2012

Application
Fueling nozzle for hydrogen fast filling of cars at self-service fueling stations.

Technical data

Characteristics	Basic version
Purging line Outer / inner diameter	6/4 mm
Nominal Pressure	PN = 70 MPa
Max. Allowable Operating Pressure	MAWP = 96.25 MPa according to ISO 17268 (PS = 962.5 bar)
Medium*	Hydrogen
Media Temperature Range	-40 °C up to +85 °C
Ambient Temperature Range	-40 °C up to +85 °C
Material	Corrosion resistant
Sealing Material	Hydrogen resistant
Nozzle Type	Type C acc. to SAE J2600:2015 and previous resp. ISO 17268:2020 and previous
Coding	H70 according to ISO 17268-1:2025
Design	With plastic thermal protection / Optimized impact protection / Integrated purging line / Hand grip with magnet
Weight	Approx. 2.65 kg
Medium for Purging	Nitrogen or compressed air
Media Temperature Range Purging Medium	-40°C to +85°C (most effective >0°C)
Hydrogen flow rate	90 g/s at 1.3 MPa pressure drop (F90-P1,3)
Flow Rate During Purging	500 Nl/h at max. 12 bar purging pressure
Conformity / Tests / Approvals	Design validation based on ISO 17268-1:2025

* Suitable for pre-cooled hydrogen

Ordering - WEH® TK20-S1 H_2 70 MPa Fueling nozzle

approx. dimensions (mm)

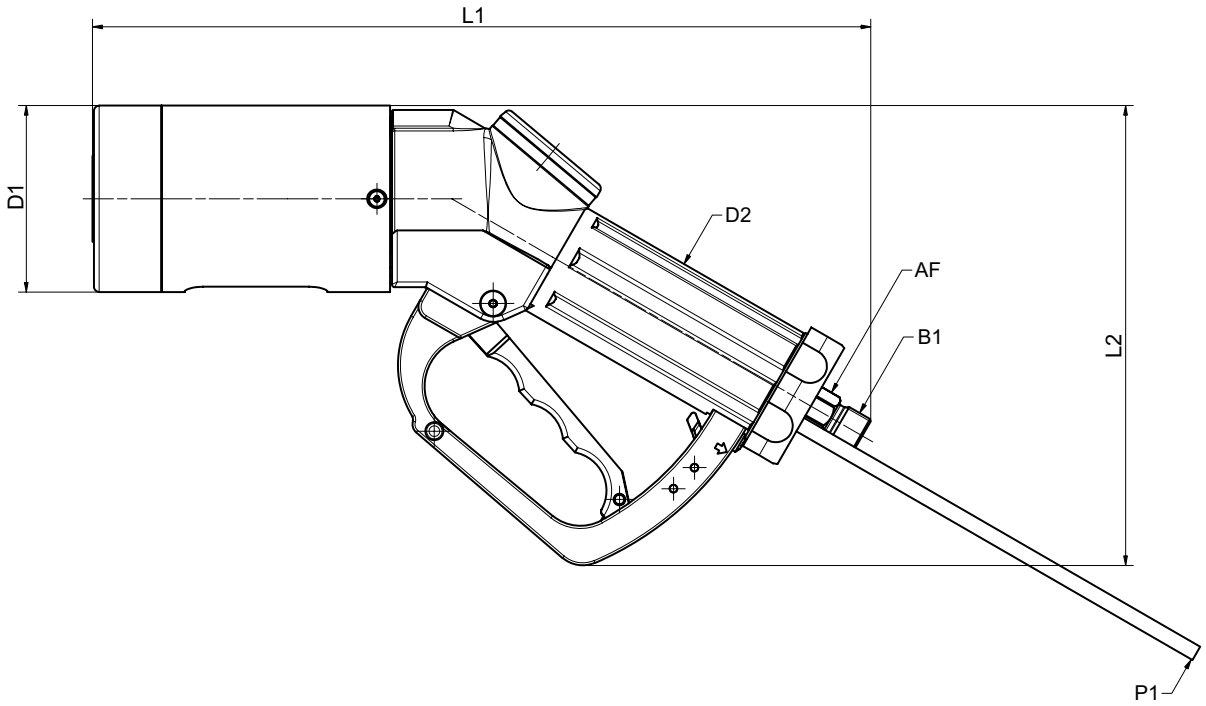

Part no.	Description	Pressure (MAWP)	B1 (male thread)	P1	L1	L2	D1	D2	A/F
C1-188782	TK20-S1H_2 70MPa	96.25 MPa	UNF 9/16"–18 *	6/4	300	178	72	46	15

* 60° inner cone
Fueling assemblies consisting of fueling nozzle, hose set and breakaway coupling are available on request.

Accessories

The following accessories are available for the WEH® TK20-S1 H_2 70 MPa Fueling nozzle:

Fueling assembly consisting of Fueling nozzle TK20-S1, Breakaway coupling TSA30-S1 and Hose set

The TK20-S1 Fueling assembly set new standards: thanks to improved flow characteristics, it offers a 40 % lower pressure drop at a flow rate of 90 g/s.

Part. no.	Description
On request	Fueling assembly TK20-S1



*Values may vary depending on the test setup (e.g. Hose length, receptacle).

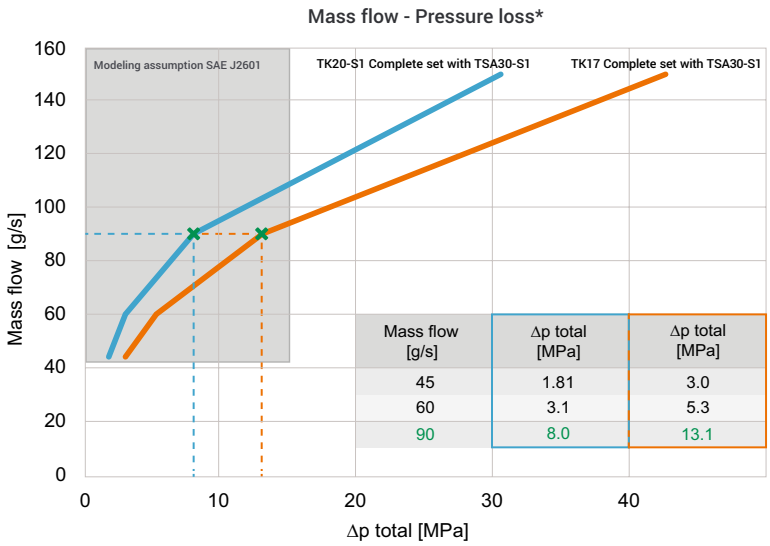

Mass flow [g/s]	Δp total [MPa]	Δp total [MPa]
45	1.81	3.0
60	3.1	5.3
90	8.0	13.1

Hose set

Hose set for connecting fueling nozzle and TSA30 H_2 70 MPa breakaway coupling, complete with filling hose, data cable, purging line and braided protection hose as cover.

Design filling hose: max. operating pressure PS: 96.25 MPa / nominal bore fitting (TNW): 4.5 mm / media temperature range: -40 °C up to +85 °C



Part no.	B1/B2 (female thread)	P1 / P2	Hose length
C1-189992	UNF 9/16“-18*	Ø6	3 m
C1-189993	UNF 9/16“-18*	Ø6	4 m
C1-189994	UNF 9/16“-18*	Ø6	5 m

* DKJ 58°

Dispenser mounting

The fueling nozzle can also be used with a dispenser mounting, which is installed on the fuel dispenser.
Advanced dispenser mounting for fueling nozzles
With inductive sensor and M12x1 connector, explosion-proof according to ATEX

approx. dimensions (mm)



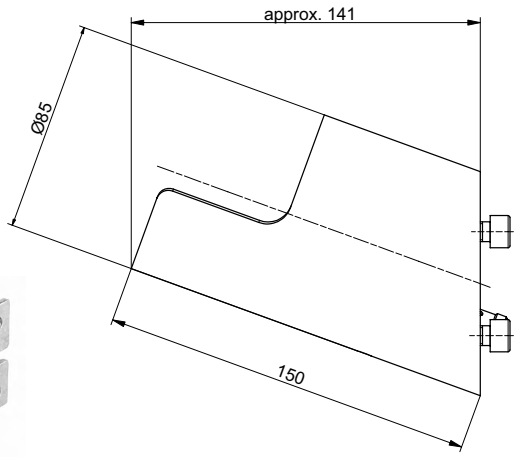

mounting bracket

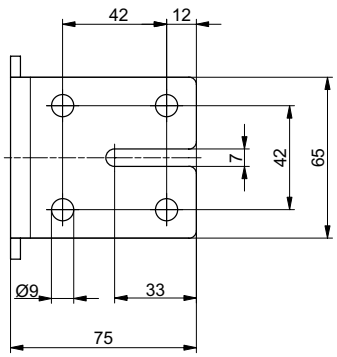

Part no.	Description
C1-190361	Dispenser mounting for TK20 H_2 (Including mounting bracket, installable in three different designs)

Classic dispenser mounting for fueling nozzles

With magnetic field sensor and 2 m cable, explosion-proof according to ATEX

approx. dimensions (mm)



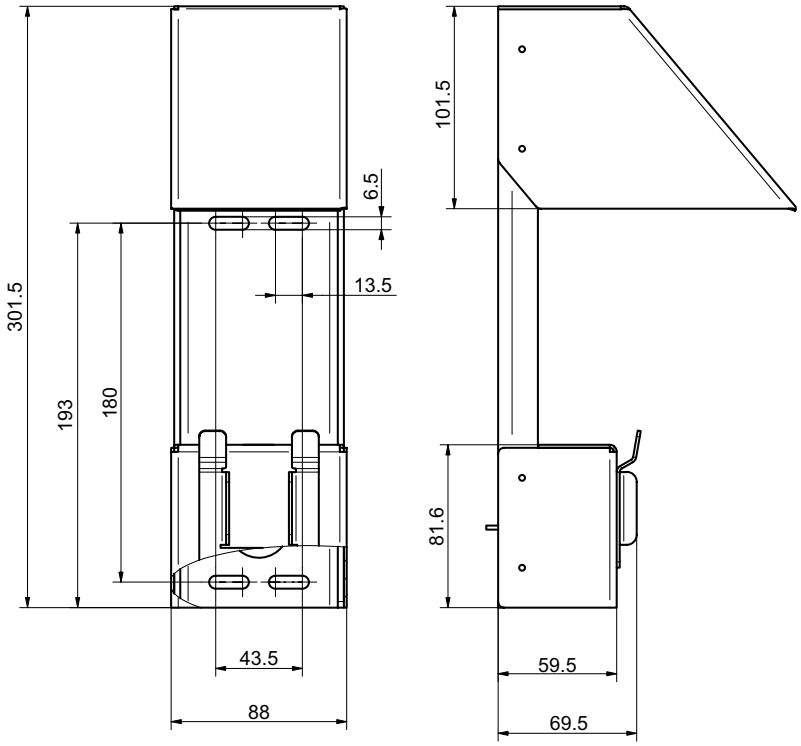

Part No.	Description
C1-191367	Dispenser mounting for TK20 H_2

Service receptacle WEH® TNS1 H_2

To prevent damage in the fueling nozzle while leak testing during maintenance in the course of which pressure is applied, we recommend the use of a service receptacle. The receptacle also protects the fueling nozzle from dirt ingress whilst not in use.



Part no.	Description	Pressure (MAWP)
C1-148079	TNS1 H_2 Service receptacle incl. protection cap	87,5 MPa

WEH® Breakaway coupling

The suitable TSA30 H_2 70 MPa breakaway coupling, please see page 26.

Spare Parts

Various parts are available as spares for the WEH® TK20-S1 H_2 70 MPa Fueling nozzle.



Position	Part No.	Description
1	C1-189534	Impact protection sleeve (incl. screws)
2	C1-189537	Hand grip (incl. locking lever, clamp and screws)
3	C1-161748	Logo cap
4	C1-59738	Logo plate
5	C1-186082	Clamping nut for protective hose
6	C1-157491	Label
7	C1-189538	Handle protector (incl. screws)
	On request	Maintance spray

When ordering please specify the part no. engraved on the fueling nozzle.

Description

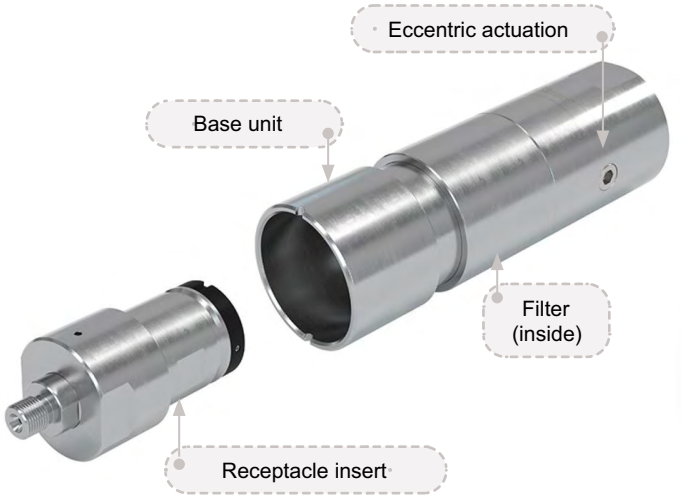

Features
- Enhanced safety → operating pressure up to max. 96.25 MPa
- Integrated filter (5 µm) → for clean filtered hydrogen
- Short and compact design
- Enhanced breakaway force acc. to ISO 19880-3
- Base unit can be reused after breakaway → no factory servicing necessary
- Receptacle insert available as a spare part → no downtime after a breakaway
- Easy installation directly on the dispenser

new

More safety at hydrogen fueling stations with the new WEH® TSA30-S1 H_2 70 MPa Breakaway coupling.
The breakaway coupling is installed directly on the dispenser. In the event of unexpected tensile forces, such as a vehicle driving away with a connected fueling nozzle, the TSA30-S1 H_2 70 MPa separates the connection between the dispenser and hose in a controlled manner. Both sides are sealed pressure-tight directly after breakaway and therefore damage to the vehicle and the dispenser can be prevented as far as possible.

The max. operating pressure of 96.25 MPa offers even more safety. If there is a malfunction, the safety valve of the dispenser opens at a pressure of 96.25 MPa. This high pressure can also reach the breakaway coupling, but the TSA30-S1 H_2 70 MPa can withstand this pressure perfectly.

In the event of a breakaway, the base unit can be reused - no factory servicing is necessary. Only the receptacle insert needs to be replaced or serviced. Therefore we offer a replacement receptacle insert, to avoid downtime at the dispenser.
The WEH® Breakaway coupling consists of a base unit and a receptacle insert. The integrated filter ensures clean filtered hydrogen and thus prevents damage caused by dirt ingress.
The TSA30-S1 H_2 70 MPa is suitable for use with pre-cooled hydrogen.

Application
Breakaway coupling for hydrogen fueling stations for direct installation at the dispenser.

Technical data

Characteristics	Basic version
Nominal Pressure	PN = 70 MPa
Max. allowable operating Pressure	MAWP = 96.25 MPa according to ISO 19880-1 (PS = 962.5 bar)
Media temperature range	−40 °C up to +85 °C
Ambient temperature range	−40 °C up to +85 °C
Breakaway force	220 – 1.000 N
Material	Corrosion resistant stainless steel
Sealing material	Hydrogen resistant
Design	With filter (5 µm)
Conformity / Tests / Approvals	Design validation based on ISO 19880-3

Other designs on request

Ordering - WEH® TSA30-S1 H_2 70 MPa Breakaway coupling

approx. dimensions (mm)

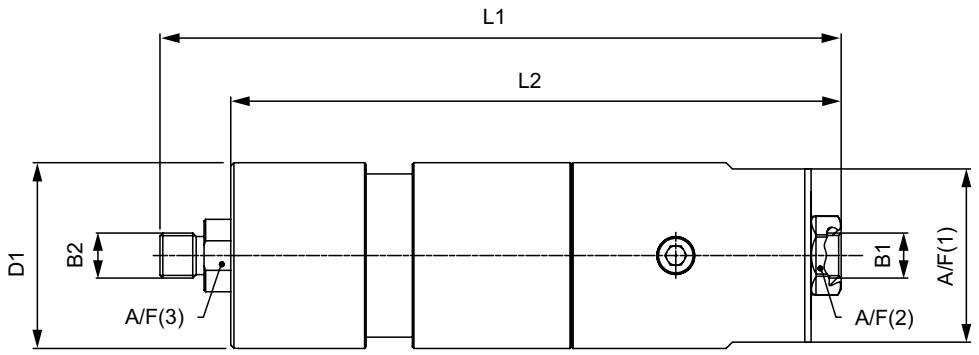

Part No.	Description	TNW	Pressure (MAWP)	B1 (female thread)	B2 (male thread)	L1	L2	D1	A/F (1)	A/F (2)	A/F (3)
C1-163690	TSA30-S1H_2 70MPa	3,5mm	96.25 MPa	UNF 9/16"–18 *	UNF 9/16"–18 **	216	194	59	55	22	21

* MP-fitting, 60° inner cone
** 60° inner cone

Accessories

The following accessories are available for the WEH® TSA30-S1 H_2 70 MPa Breakaway coupling:

Dispenser mounting

Mounting for safe attachment of the breakaway coupling to the dispenser. An integrated guide ring in the mounting ensures a straight breakaway force.

approx. dimensions (mm)

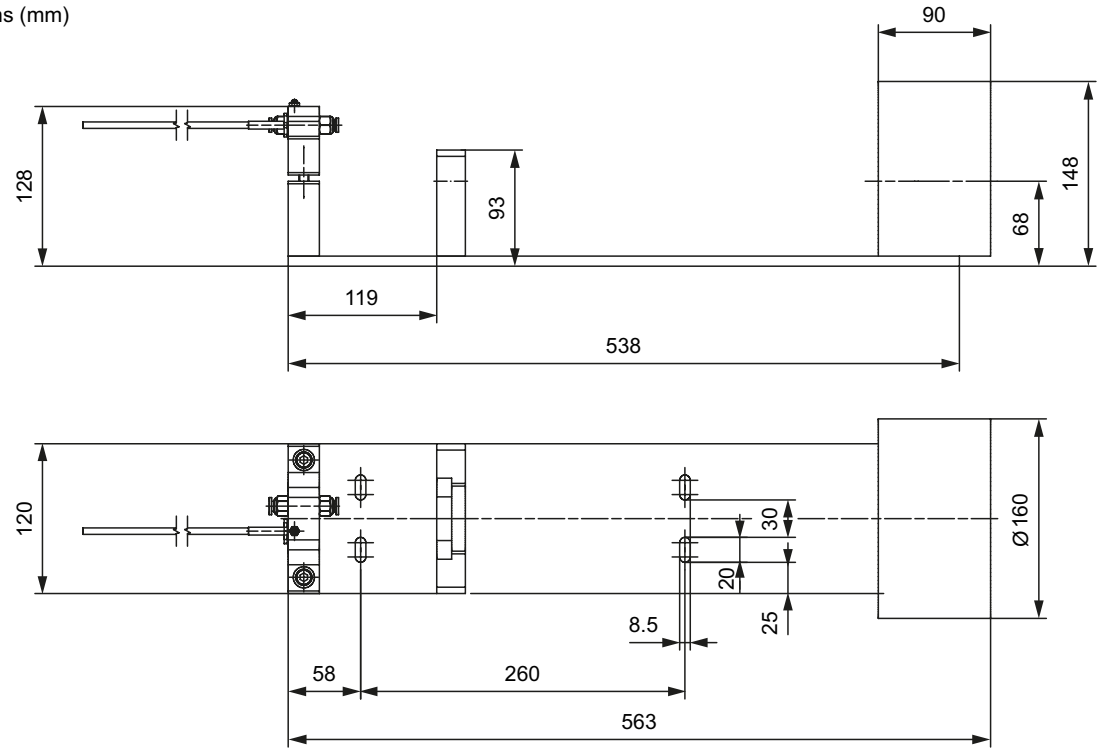

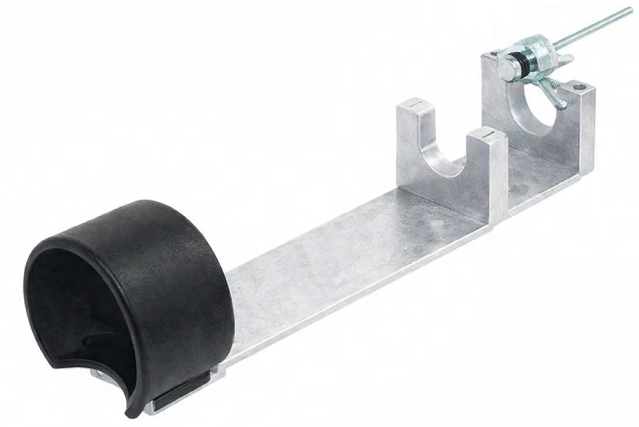

Part no.	Description
C1-183156	Dispenser mounting for TSA30-S1 H_2 70 MPa incl. data cable

Hoses

Suitable hoses for the TSA30-S1 H_2 70 MPa breakaway coupling are available on request.

Spare Parts

Various parts are available as spares for the WEH® TSA30-S1 H_2 70 MPa Breakaway coupling.

Part No.	Description
C1-168931	Receptacle insert for TSA30-S1 H_2 70 MPa

Description

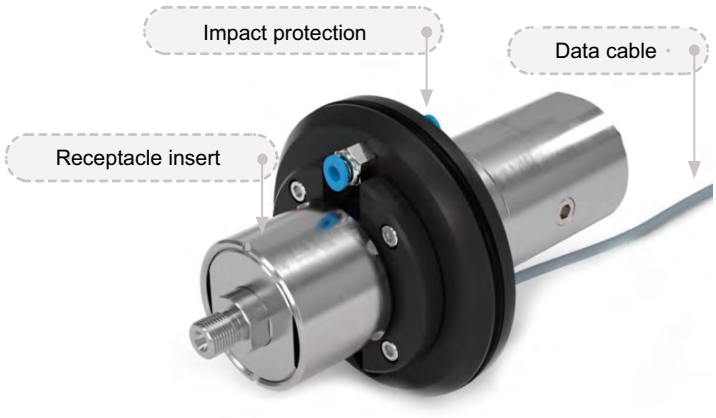

Features
- Higher safety → operating pressure up to máx. 96,25 MPa
- Integrated filter (5 µm) → for clean filtered hydrogen
- Short and compact design
- Increased breakaway force in accordance with ISO 19880-3
- Base unit can be reused after demolition → no factory servicing necessary
- Receptacle insert available as a spare part → no downtime after a tear-off
- Easy assembly within the hose set guarantees axial force transmission without additional support

new

More safety at hydrogen fueling stations with the new WEH® TSA31-S1 H_2 70 MPa breakaway coupling.
The breakaway coupling is installed directly between the filling hose to the fueling nozzle and the filling hose to the filling station. If unexpected tensile forces occur, e.g. when a vehicle with a connected fueling nozzle drives away, the TSA31-S1 H_2 70 MPa disconnects the connection between the dispenser and hose in a controlled manner. Both sides are sealed pressure-tight directly after breakaway and therefore damage to the vehicle and the dispenser can be prevented as far as possible.

The max. operating pressure of 96.25 MPa offers even more safety. If there is a malfunction, the safety valve of the dispenser opens at a pressure of 96.25 MPa. This high pressure can also reach the breakaway coupling, but the TSA31-S1 H_2 70 MPa can withstand this pressure perfectly.

In the event of a breakaway, the base unit can be reused - no factory servicing is necessary. Only the receptacle insert needs to be replaced or serviced. Therefore we offer a replacement receptacle insert, to avoid downtime at the dispenser.

The WEH® breakaway coupling consists of the base unit, the receptacle insert and a holding flange, which contains the plug-in couplings for the data cable and purging cable. The integrated filter ensures clean filtered hydrogen and thus prevents damage caused by dirt ingress. The TSA31-S1 H_2 70 MPa is suitable for use with pre-cooled hydrogen.

Application
Breakaway coupling for hydrogen filling stations for installation between two filling hoses.

Technical data

Characteristics	Basic version
Nominal Pressure	PN = 70 MPa
Max. allowable operating Pressure	MAWP = 96.25 MPa according to ISO 19880-1 (PS = 962.5 bar)
Media temperature range	−40 °C up to +85 °C
Ambient temperature range	−40 °C up to +85 °C
Breakaway force	220 – 1.000 N
Material	Wear-resistant stainless steel, corrosion-resistant surfaces
Sealing material	Hydrogen resistant
Design	With integrated filter (5 µm)
Conformity / Tests / Approvals	Design validation based on ISO 19880-3

Other designs on request

Ordering - WEH® TSA31-S1 H_2 70 MPa Breakaway coupling

approx. dimensions (mm)

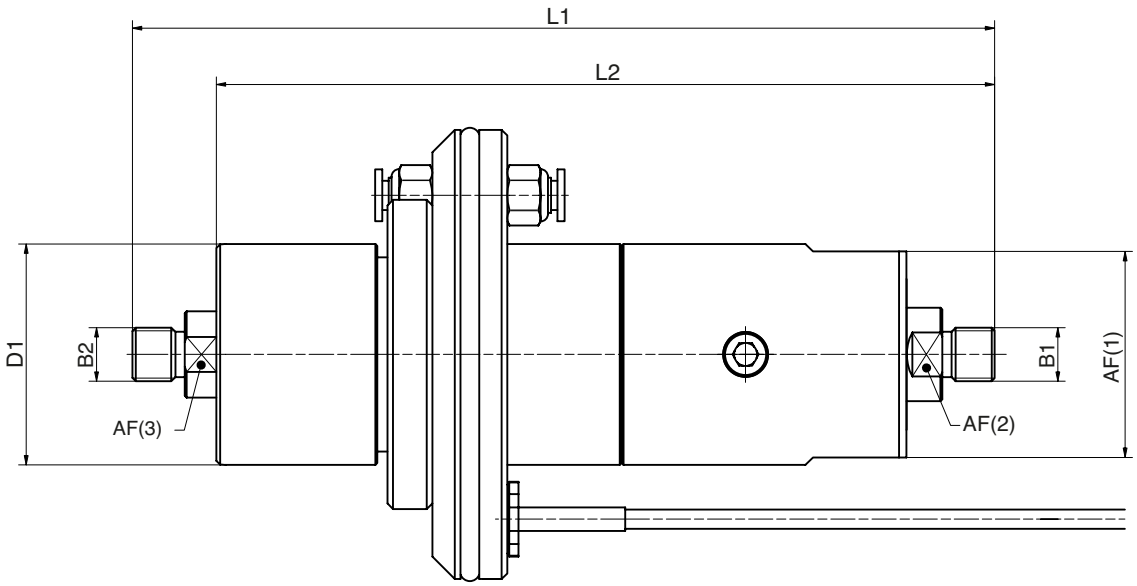

Part No.	Description	DN	Pressure (MAWP)	B1 (male thread)	B2 (male thread)	L1	L2	D1	D2	A/F (1)	A/F (2)	A/F (3)
C1-188029	TSA31-S1H_2 70MPa	3,5mm	96.25 MPa	UNF 9/16"–18 *	UNF 9/16"–18 *	320	207	59	120	55	22	21

* 60° inner cone, type M

Accessories

The following accessories are available for the WEH® TSA31-S1 H_2 70 MPa breakaway coupling:

Hose set between dispenser and breakaway coupling:

Part No.	Description	Hose length
C1-112185	Pressure hose H_2 70 MPa	0,5m

Hose set from the breakaway coupling to the fueling nozzle:

Part No.	Description	Hose length
C1-167804	Hose set H_2 70 MPa	2,5m
C1-189699	Hose set H_2 70 MPa	3,5m
C1-189702	Hose set H_2 70 MPa	4,5m

Spare parts

Various parts are available as spares for the WEH® TSA31-S1 H_2 70 MPa breakaway coupling.

Part No.	Description
C1-168931	Receptacle insert for TSA31-S1 H_2 70 MPa

Receptacle

TN9-S1- H_2 70 MPa

Description



Features
- High flow rate of up to 90 g/s for fast refueling
- 10-µm metal wire mesh filter, customizable
- Certified according to ISO 17268:2020 for maximum safety
- Low-noise refueling thanks to optimized inner shape
- Seal-friendly design: Robust, durable and easy to maintain
- Coding for pressure range / gas type (acc. to table below)

new

The WEH® TN9-S1 H_2 70 MPa receptacle was specially developed for refueling vehicles with hydrogen in the 700 bar pressure range.

The aerodynamically optimized inner shape of the receptacle ensures a virtually silent filling process and guarantees a maximum flow rate of up to 90 g/s. The seal-friendly design effectively protects internal seals from damage and ensures a long service life.

Thanks to its robustness and minimal maintenance requirements, the TN9-S1 H_2 70 MPa is particularly reliable and helps to reduce downtimes. It is also equipped with an integrated check valve and offers maximum safety and compatibility in accordance with ISO 17268:2020 thanks to the coding for pressure stage/gas type.

More safety thanks to integrated self-cleaning particle filter
The integrated filter cartridge with a pore size of 10µm, custom-made for the TN9, offers reliable protection against dirt particles and impurities. Its multi-layer wire mesh enables outstanding filter performance by effectively removing even long fibers and the smallest particles.This filter not only prevents leaks at the receptacle, but also ensures that operation remains safe and reliable even under difficult environmental conditions. The filter can also be flexibly adapted to different degrees of purity to meet your specific requirements.

TK H_2 (Except TK25 H_2)

TN9-S1 H_2 70 MPa	25 MPa	35 MPa	35 MPa MF*	35 MPa HF**	70 MPa
70 MPa	✓	✓			✓

*MF = Medium-Flow acc. to ISO 17268-1:2025
** HF = High-Flow acc. to ISO 17268:2012

Application
Receptacle for hydrogen refueling / filling of trucks, buses, vans, cars and for industrial applications suitable for the WEH® fueling nozzle according to the table below.

Technical data

Characteristics	Basic version
Technical nominal size (TNW)	4mm
Nominal pressure	PN = 70 MPa
Max. allowable operating pressure	MOP 87,5 MPa (PS = 875 bar)
Temperature range	−40 °C up to +85 °C
Material	Corrosion resistant
Sealing material	Hydrogen resistant
Design	With protection cap, integrated particle filter and integrated check valve
Coding	H70 Grade D according to ISO 17268-1:2025
Conformity / Tests / Approvals	Certified according to ISO 17268:2020

Other designs on request

Ordering - WEH® TN9-S1 H_2 70 MPa Receptacle with male thread

approx. dimensions (mm)



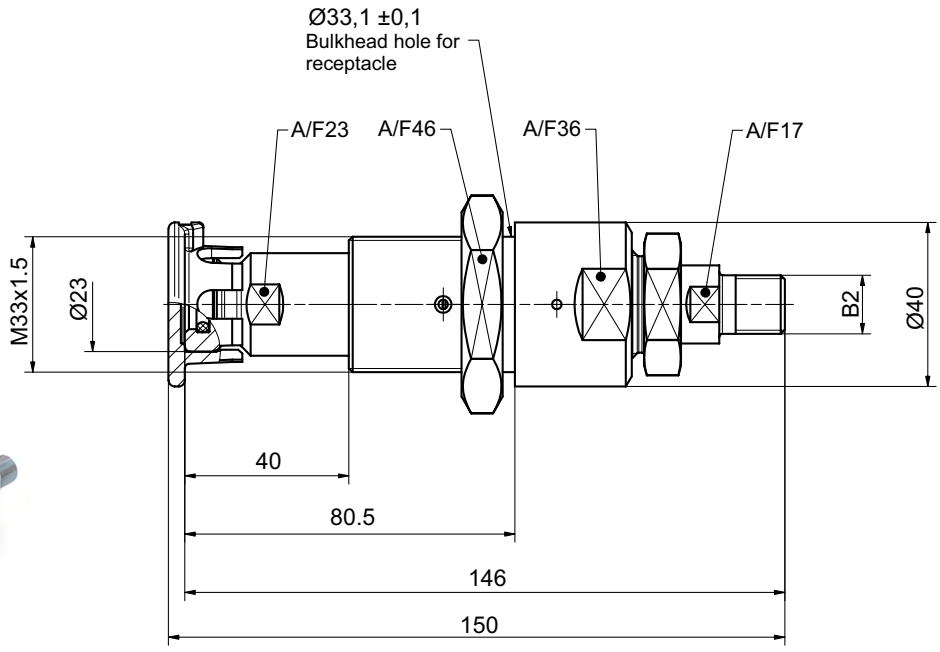

Part No.	Description	Mesh size filter	Pressure (MOP)	B2 (male thread)
C1-185258	TN9-S1H_2 70 MPa	10 µm	87.5 MPa	UNF 9/16"–18 *

* Connection geometry: MP fitting, 60° internal cone

Ordering - WEH® TN9-S1 H_2 70 MPa Receptacle with female thread

approx. dimensions (mm)



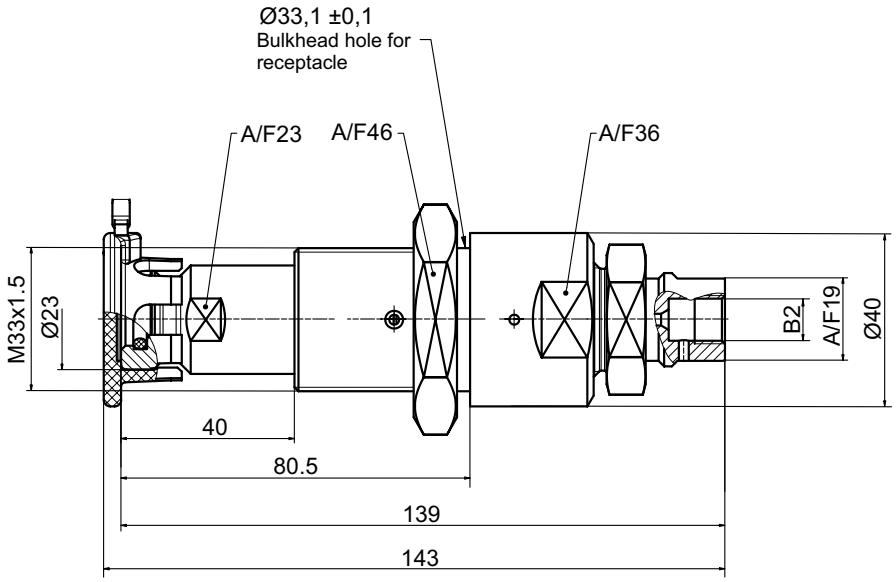

Part No.	Description	Mesh size filter	Pressure (MOP)	B2 (female thread)
C1-188769	TN9-S1H_2 70 MPa	10 µm	87.5 MPa	UNF 7/16“-20*

* Connection geometry: MP fitting, 60° internal cone

Ordering - WEH® TN9-S1 H_2 70 MPa Receptacle with male thread

approx. dimensions (mm)



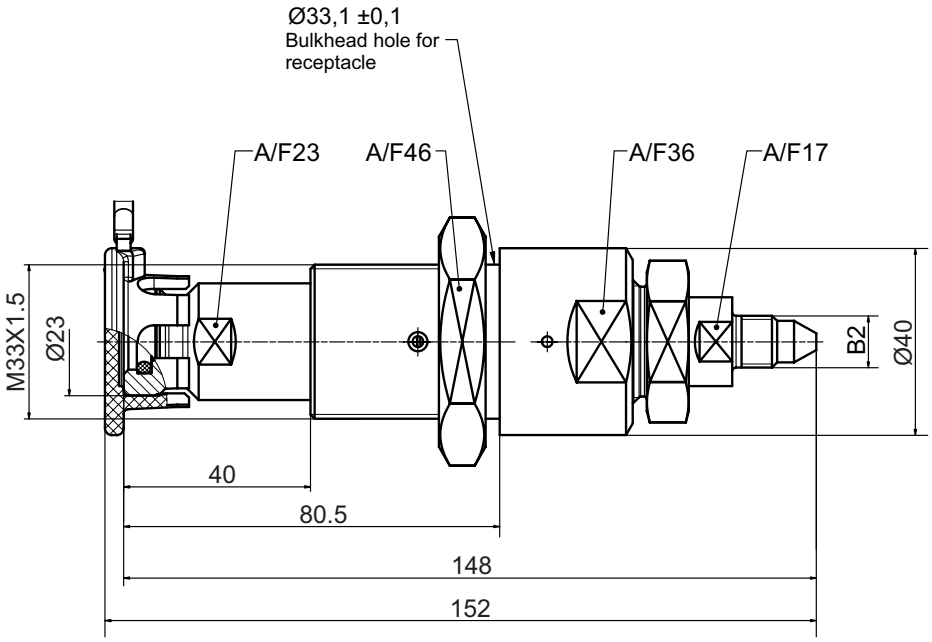

Part No.	Description	Mesh size filter	Pressure (MOP)	B2 (male thread)
C1-188771	TN9-S1H_2 70 MPa	10 µm	87.5 MPa	UNF 7/16“-20*

* Connection geometry: MP fitting, 59° internal cone
Other connections (e.g. O-Lok Face Seal or VOSSLok[40] or ISO 18418) on request.

Accessories

The following accessories are available for the WEH® TN9-S1 H_2 70 MPa Receptacle:
Infrared data interface incl. holder for TN9

Application example:



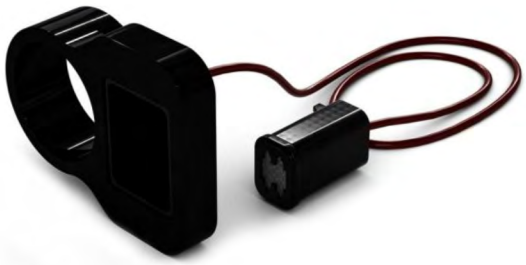

Part No.	Description
C1-188500	Infrared data interface incl. holder for TN9 (Input signal RS485, output signal J2799 Infrared)
C1-188941	Mounting nut (for IR interface)

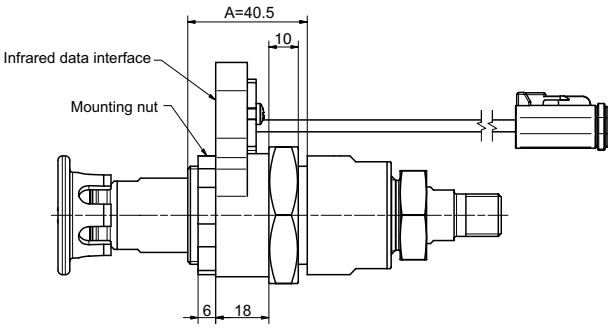

Note: The WEH® receptacle is designed to accommodate an attached data interface in area “A.”
When installing the WEH® receptacle, ensure that the permissible installation space A of 40.5 mm is not exceeded.

Take into account the sheet thickness, nut height, and data interface, including the mounting element.

When using data interface C1-188500 and mounting nut C1-188941, the sheet metal thickness must not exceed 6 mm.

Spare parts

Various parts are available as spares for the WEH® TN9-S1 H_2 70 MPa Receptacle.

Protection cap / Nut

Protection cap with a strap to protect the receptacle from dirt ingress.



Part No.	Description
W85984	Protection cap for receptacles
C1-185122	TN9-H70 Nut M33x1.5 for receptacle mounting

Check valve

TVR1- H_2 70 MPa

Description



Features
- Robust construction
- Low-noise opening and closing
- Corrosion resistant stainless steel
- High leak tightness

With the TVR1 H_2 70 MPa WEH offers a high-performance check valve for use in hydrogen cars or hydrogen fueling stations of the latest generation.
The WEH® TVR1 H_2 70 MPa check valves provide a reliable function wherever hydrogen should only flow in one direction within a pipe system and must be prevented from a return flow.

The seals in the valve are arranged to prevent them from being damaged by dirt particles in the gas flow. The WEH® TVR1 H_2 70 MPa Check valve is made of corrosion-resistant stainless steel achieving a very durable unit due to its robust internal structure

Application
Check valve for cars, also suitable for installation in hydrogen fueling stations.
The WEH® TVR1 H_2 70 MPa product family is offered as a return flow prevention acc. to DIN EN 736-1 for installation in H2 systems and pipelines.

Technical data

Characteristics	Basic version
Technical nominal size (TNW)	Depending on design
Nominal Pressure	PN = 70 MPa
Max. allowable operating Pressure	MAWP = 87.5 MPa according to ISO 17168 (PS = 875 bar)
Temperature range	−40 °C up to +85 °C
Material	Corrosion resistant stainless steel
Sealing material	Hydrogen resistant
Design	With or without integrated particle filter (20 µm)
Conformity / Tests / Approvals	e1 00 0009 (Regulation (CE) n.º 79/2009)

Other designs on request

Ordering - WEH® TVR1 H_2 70 MPa Check valve with male thread on both sides (Face Seal on both sides)

approx. dimensions (mm)



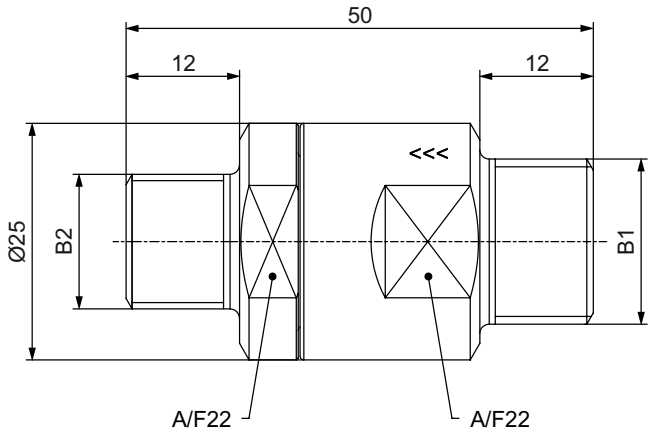

Part No.	Description	TNW	Pressure (MAWP)	B1 (male thread)	B2 (male thread)
C1-76959-X1	TVR1 H_2 70 MPa (EC79)	4mm	87.5 MPa	UN 11/16“-16 for sealing with O-Lok® Face Seal* for tube Ø 10 (3/8“)	UNF 9/16“-18 for sealing with O-Lok® Face Seal* for tube Ø 6 (1/4“)

* Face Seal acc. to SAE J1453

Ordering - WEH® TVR1 H_2 70 MPa Check valve with female thread / male thread and filter (20 µm)

approx. dimensions (mm)



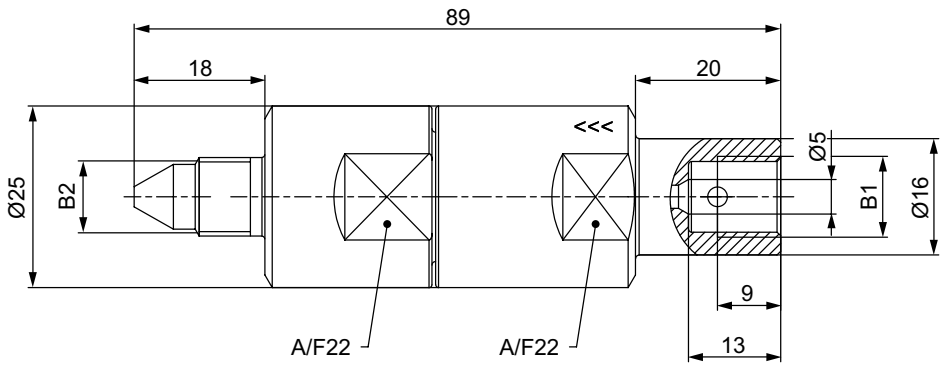

Part No.	Description	TNW	Pressure (MAWP)	B1 (female thread)	B2 (male thread)
C1-87743	TVR1 H_2 70 MPa (EC79)	2,5mm	87.5 MPa	UNF 7/16“-20*	UNF 7/16“-20**

* MP-fitting, 60° inner cone
** MP-fitting, 59° outer cone

Other connection sizes and types (e.g. Cone and Thread Fittings or VOSSLok[40]) on request.

TK20-S2 H_2 35 MPa ENR

Description



Features
- Type C nozzle acc. to SAE J2600 resp. ISO 17268
- Very high flow rate
- Easy operation / single-handed operation
- Max. allowable operating pressure 48.125 MPa (MAWP according to ISO 19880-1:2020)
- Exchangeable data interface (ENR)
- Integrated purging line for nitrogen flushing
- WEH® EASY-TURN 250° swivel joint
- Optimized impact protection to protect the data interface
- Plastic thermal protection
- Hand grip with magnet
- Compatible with pressure stage H35 according to ISO 17268-1:2025 (see table below)

new

The WEH® TK20-S2 H_2 35 MPa ENR Fueling nozzle with exchangeable data interface (ENR = exchangeable nozzle re ceiver) was developed for fast filling of cars with compressed, gaseous hydrogen (CGH2). Through to the larger nominal width, refueling with 90 g/s or higher is possible. In addition, this filling nozzle is designed for a maximum operating pressure of 48.125 MPa (= MAWP according to ISO 19880-1:2020).

In addition, the new TK20-S2 H_2 35 MPa ENR has the same tried and tested features as the already well-known TK17 H_2 70 MPa ENR.
The fueling nozzle is additionally equipped with a purging line that allows purging with nitrogen during and after refueling process. This can prevent ingress of moisture and the formation of ice crystals during filling with precooled hydrogen.

The WEH® TK20-S2 H_2 35 MPa ENR offers optimum safety for the operator thanks to the locking mechanism. The Fueling nozzle remains connected to the receptacle until the locking mechanism is released by the operator.

TN H_2 (Except TN5 H_2)

TK20-S2 H_2 35 MPa ENR	25 MPa	35 MPa	35 MPa MF*	35 MPa HF**	70 MPa
35 MPa		✓	✓	✓	✓

*MF = Medium-Flow acc. to ISO 17268-1:2025
** HF = HF = High-Flow acc. to ISO 17268:2012

Application
Fueling nozzle for hydrogen fast filling of cars at self-service fueling stations.

Technical data

Characteristics	Basic version
Purging line Outer / inner diameter	6/4 mm
Nominal Pressure	PN = 35 MPa
Max. Allowable Operating Pressure	MAWP = 48.125 MPa according to ISO 17268 (PS = 481.25 bar)
Medium*	Hydrogen
Media Temperature Range	-40 °C up to +85 °C
Ambient Temperature Range	-40 °C up to +85 °C
Material	Corrosion resistant
Sealing Material	Hydrogen resistant
Nozzle Type	Type C acc. to SAE J2600:2015 and previous resp. ISO 17268:2020 and previous
Coding	H35 according to ISO 17268-1:2025
Design	With plastic thermal protection / Optimized impact protection to protect the data interface / Exchangeable data interface acc. to SAE J2799 / Integrated purging line / Hand grip with magnet
Weight	Approx. 2.65 kg
Medium for Purging	Nitrogen or compresed air
Media Temperature Range Purging Medium	-40°C to +85°C (most effective >0°C)
Flow Rate During Purging	500 Nl/h at max. 12 bar purging pressure
Conformity / Tests / Approvals	IR data interface: SAE J2799 and ATEX, NEC, KTL, CCC Design validation based on ISO 17268-1:2025

* Suitable for pre-cooled hydrogen

Ordering - WEH® TK20-S2 H_2 35 MPa ENR Fueling nozzle

approx. dimensions (mm)

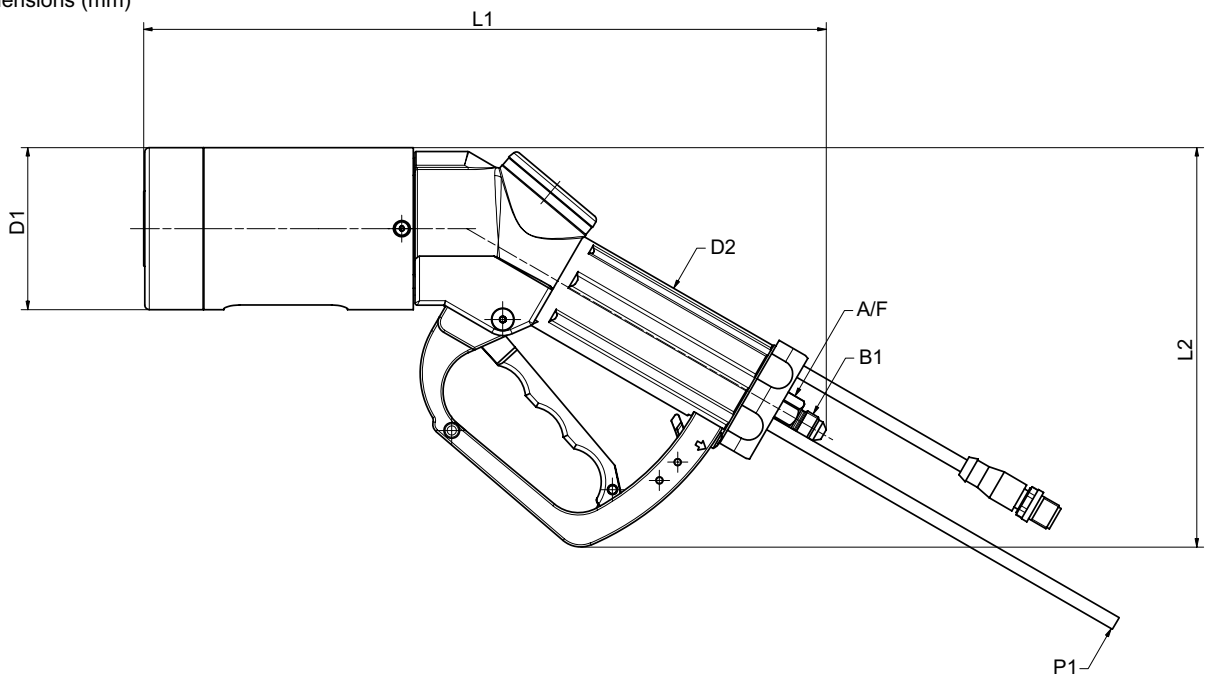

Part no.	Description	Pressure (MAWP)	B1 (male thread)	P1	L1	L2	D1	D2	A/F
C1-188780	TK20-S2H_2 35MPa ENR	48.125 MPa	UNF 7/16“-20*	6/4	289	178	72	46	15

* according to SAE J514 with 37° outer cone
Fueling assemblies consisting of fueling nozzle, hose set and breakaway coupling are available on request.

Accessories

The following accessories are available for the WEH® TK20-S2 H_2 35 MPa ENR Fueling nozzle:

Hose set

Hose set for connecting fueling nozzle and TSA1 H_2 breakaway coupling, complete with filling hose, data cable, purging line and braided protection hose as cover.
Design filling hose: max. operating pressure PS: 49 MPa / nominal bore fitting (TNW): 4.5 mm / media temperature range: -40 °C up to +85 °C



Part no.	B1/B2 (female thread)	P1 / P2	Hose length
E68-174299	UNF 7/16“-20*	Ø6	3 m
E68-174300	UNF 7/16“-20*	Ø6	4 m
E68-174301	UNF 7/16“-20*	Ø6	5 m

* according to SAE JIC, 37° sealing cone

Dispenser mounting

The fueling nozzle can also be used with a dispenser mounting, which is installed on the fuel dispenser.
Advanced dispenser mounting for fueling nozzles
With inductive sensor and M12x1 connector, explosion-proof according to ATEX

approx. dimensions (mm)



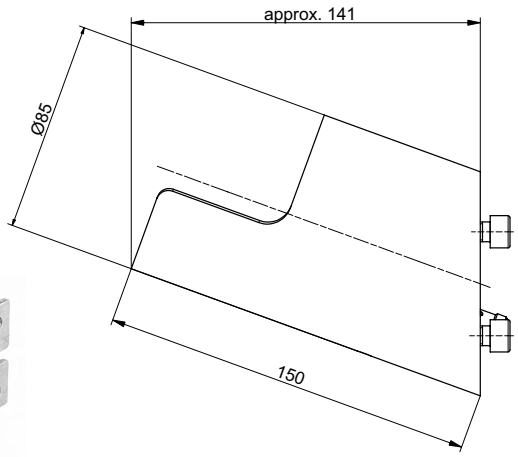

mounting bracket

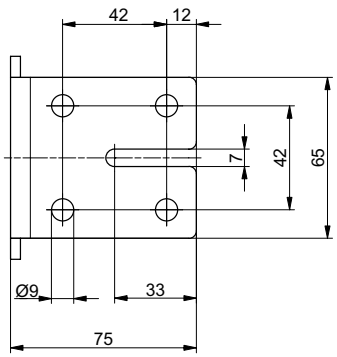

Part no.	Description
C1-190361	Dispenser mounting for TK20 H_2 (Including mounting bracket, installable in three different designs)

Classic dispenser mounting for fueling nozzles

With magnetic field sensor and 2 m cable, explosion-proof according to ATEX

approx. dimensions (mm)



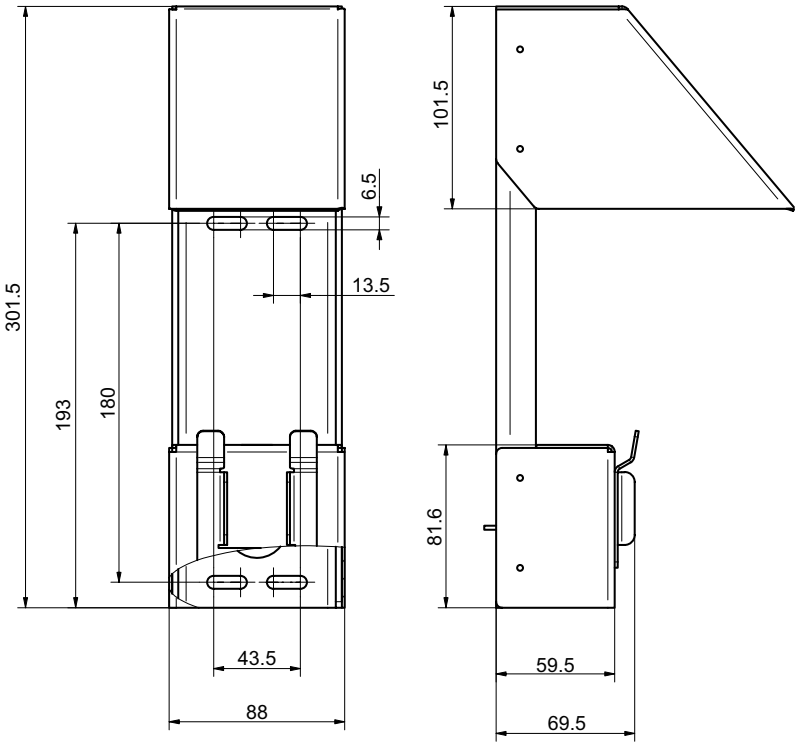

Part No.	Description
C1-191367	Dispenser mounting for TK20 H_2

WEH® TNS1 H_2 Service receptacle

To prevent damage in the fueling nozzle while leak testing during maintenance in the course of which pressure is applied, we recommend the use of a service receptacle. The receptacle also protects the fueling nozzle from dirt ingress whilst not in use.



Part no.	Description
C1-148079	TNS1 H_2 Service receptacle incl. protection cap

WEH® Breakaway coupling

The suitable TSA1 H_2 breakaway coupling, please see page 80.

Data cable

Part no.	Description	Hose length
E68-96194	Data cable suitable for 4 m hose set	4,45m
E68-96193	Data cable for connecting with the converter	3,45m

Other lengths on request

Spare parts

Various parts are available as spares for the WEH® TK20-S2 H_2 35 MPa ENR Fueling nozzle.



Position	Part No.	Description
1	C1-189533	Impact protection sleeve (incl. screws)
2	C1-189535	IR data interface ATEX, NEC, KTL, CCC (incl. O-ring and screws)
3	C1-189537	Hand grip (incl. locking lever, clamp and screws)
4	C1-161748	Logo cap
5	C1-59738	Logo plate
6	C1-186082	Clamping nut for protective hose
7	C1-157491	Label
8	C1-189538	Handle protector (incl. screws)
	Sob consulta	Maintance spray

When ordering please specify the part no. engraved on the fueling nozzle.

Description



Features
- Type C nozzle acc. to SAE J2600 resp. ISO 17268
- Very high flow rate
- Easy operation / single-handed operation
- Max. allowable operating pressure 48.125 MPa (MAWP according to ISO 19880-1:2020)
- Integrated purging line for nitrogen flushing
- WEH® EASY-TURN 250° swivel joint
- Optimized impact protection Plastic thermal protection
- Hand grip with magnet
- Compatible with pressure stage H35 according to ISO 17268-1:2025 (see table below)

new

The WEH® TK20-S2 H_2 35 MPa Fueling nozzle was developed for fast filling of cars with compressed, gaseous hydrogen (CGH2). Through to the larger nominal width, refueling with 90 g/s or higher is possible. In addition, this filling nozzle is designed for a maximum operating pressure of 48.125 MPa (= MAWP according to ISO 19880-1:2020).

In addition, the new TK20-S2 H_2 35 MPa has the same tried and tested features as the already well-known TK17 H2 70 MPa.
The fueling nozzle is additionally equipped with a purging line that allows purging with nitrogen during and after refueling process. This can prevent ingress of moisture and the formation of ice crystals during filling with precooled hydrogen.

The WEH® TK20-S2 H_2 35 MPa offers optimum safety for the operator thanks to the locking mechanism. The Fueling nozzle remains connected to the receptacle until the locking mechanism is released by the operator.

TN H_2 (Except TN5 H_2)

TK20-S2 H_2 35 MPa	25 MPa	35 MPa	35 MPa MF*	35 MPa HF**	70 MPa
35 MPa		✓	✓	✓	✓

MF* = Medium-Flow acc. to ISO 17268-1:2025
** HF = High-Flow acc. to ISO 17268:2012

Application
Fueling nozzle for hydrogen fast filling of cars at self-service fueling stations.

Technical data

Characteristics	Basic version
Purging line Outer / inner diameter	6/4 mm
Nominal Pressure	PN = 35 MPa
Max. Allowable Operating Pressure	MAWP = 48.125 MPa according to ISO 17268 (PS = 481.25 bar)
Medium*	Hydrogen
Media Temperature Range	-40 °C up to +85 °C
Ambient Temperature Range	-40 °C up to +85 °C
Material	Corrosion resistant
Sealing Material	Hydrogen resistant
Nozzle Type	Type C acc. to SAE J2600:2015 and previous resp. ISO 17268:2020 and previous
Coding	H35 according to ISO 17268-1:2025
Design	With plastic thermal protection / With plastic thermal protection Integrated purging line / Hand grip with magnet
Weight	Approx. 2.65 kg
Medium for Purging	Nitrogen or compressed air
Media Temperature Range Purging Medium	-40°C to +85°C (most effective >0°C)
Flow Rate During Purging	500 Nl/h at max. 12 bar purging pressure
Conformity / Tests / Approvals	Design validation based on ISO 17268-1:2025

* Suitable for pre-cooled hydrogen

Ordering - WEH® TK20-S2 H_2 35 MPa Fueling nozzle

approx. dimensions (mm)

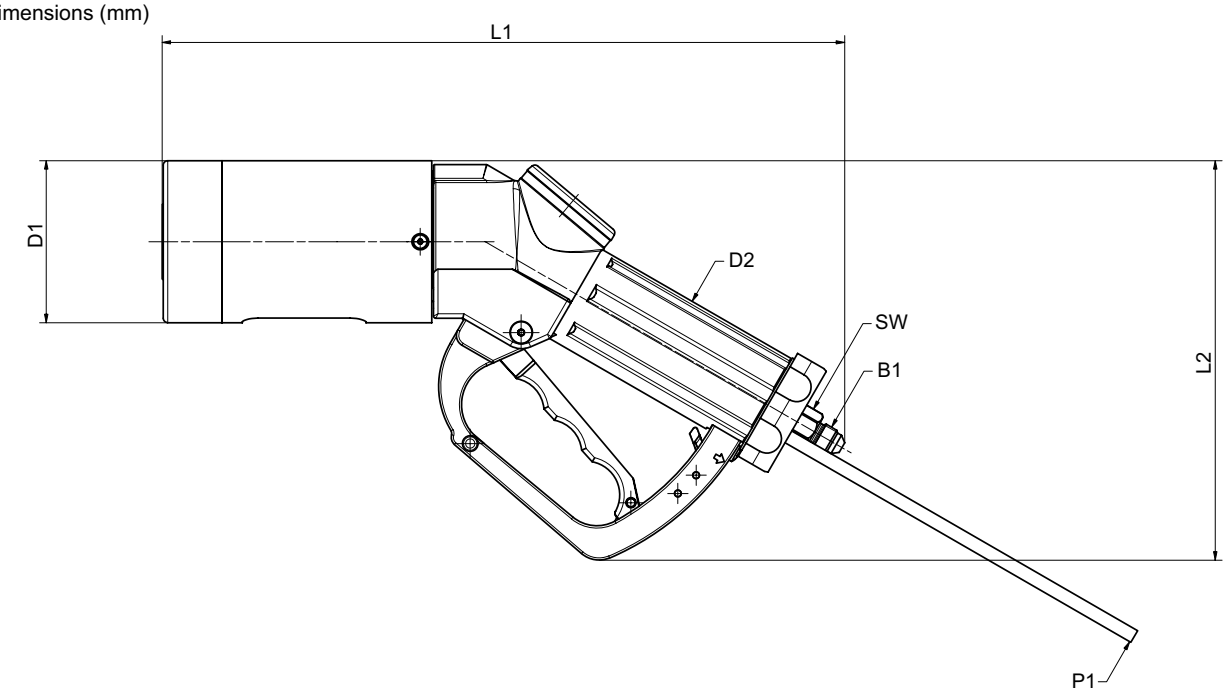

Part no.	Description	Pressure (MAWP)	B1 (male thread)	P1	L1	L2	D1	D2	A/F
C1-188783	TK20-S2H_2 35MPa	48.125 MPa	UNF 7/16“-20*	6/4	289	178	72	46	15

* according to SAE J514 with 37° outer cone
Fueling assemblies consisting of fueling nozzle, hose set and breakaway coupling are available on request.

Accessories

The following accessories are available for the WEH® TK20-S2 H2

Hose set

Hose set for connecting fueling nozzle and TSA1 H2 breakaway coupling, complete with illing hose, purging line and braided protection hose as cover.
Design filling hose: max. operating pressure PS: 49 MPa / nominal bore fitting (TNW): 4.5 mm / media temperature range: -40 °C up to +85 °C

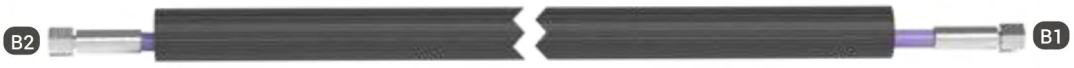

Part no.	B1/B2 (female thread)	P1 / P2	Hose length
C1-189989	UNF 7/16“-20*	Ø6	3 m
C1-189990	UNF 7/16“-20*	Ø6	4 m
C1-189991	UNF 7/16“-20*	Ø6	5 m

* according to SAE JIC, 37° sealing cone

Dispenser mounting

The fueling nozzle can also be used with a dispenser mounting, which is installed on the fuel dispenser.
Advanced dispenser mounting for fueling nozzles
With inductive sensor and M12x1 connector, explosion-proof according to ATEX

approx. dimensions (mm)



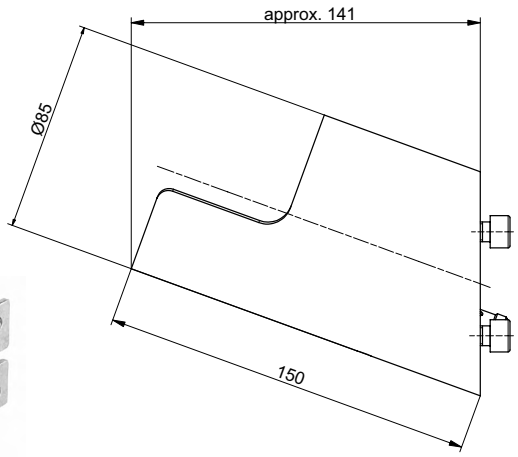

mounting bracket

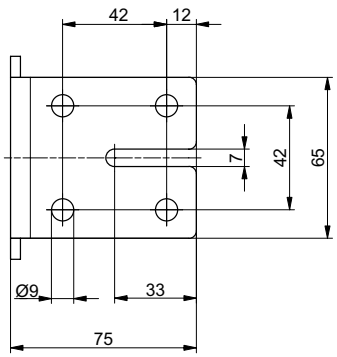

Part no.	Description
C1-190361	Dispenser mounting for TK20 H_2 (Including mounting bracket, installable in three different designs)

Classic dispenser mounting for fueling nozzles

With magnetic field sensor and 2 m cable, explosion-proof according to ATEX

approx. dimensions (mm)



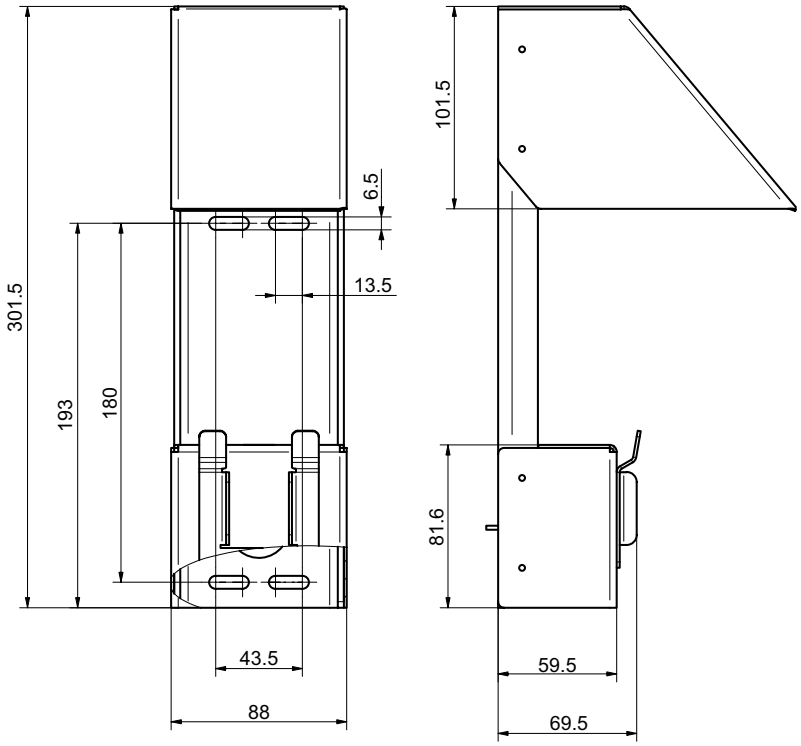

Part No.	Description
C1-191367	Dispenser mounting for TK20 H_2

WEH® TNS1 H_2 Service receptacle

To prevent damage in the fueling nozzle while leak testing during maintenance in the course of which pressure is applied, we recommend the use of a service receptacle. The receptacle also protects the fueling nozzle from dirt ingress whilst not in use.



Part no.	Description
C1-148079	TNS1 H_2 Service receptacle incl. protection cap

WEH® Breakaway coupling

The suitable TSA1 H_2 breakaway coupling, please see page 80.

Spare parts

Various parts are available as spares for the WEH® TK20-S2 H_2 35 MPa Fueling nozzle.



Position	Part No.	Description
1	C1-189533	Impact protection sleeve (incl. screws)
2	C1-189537	Hand grip (incl. locking lever, clamp and screws)
3	C1-161748	Logo cap
4	C1-59738	Logo plate
5	C1-186082	Clamping nut for protective hose
6	C1-157491	Label
7	C1-189538	Handle protector (incl. screws)
	Sob consulta	Maintance spray

When ordering please specify the part no. engraved on the fueling nozzle.

Description



Features
- Type C nozzle acc. to SAE J2600 resp. ISO 17268
- Very high flow rate
- Easy operation / single-handed operation
- Max. allowable operating pressure 48.125 MPa (MAWP according to ISO 19880-1:2020)
- Exchangeable data interface (ENR)
- Integrated purging line for nitrogen flushing
- WEH® EASY-TURN 250° swivel joint
- Optimized impact protection to protect the data interface
- Plastic thermal protection
- Hand grip with magnet
- Compatible with pressure stage H35 Medium-Flow according to ISO 17268-1:2025 (see table below)

new

The WEH® TK20-S3 H_2 35 MPa ENR Medium-Flow Fueling nozzle with exchangeable data interface (ENR = exchangeable nozzle receiver) was developed for fast filling of cars with compressed, gaseous hydrogen (CGH2). Through to the larger nominal width, refueling with 120 g/s or higher is possible. In addition, this filling nozzle is designed for a maximum operating pressure of 48.125 MPa (= MAWP according to ISO 19880-1:2020).

The fueling nozzle is additionally equipped with a purging line that allows purging with nitrogen during and after refueling process. This can prevent ingress of moisture and the formation of ice crystals during filling with precooled hydrogen.

The WEH® TK20-S3 H_2 35 MPa ENR Medium-Flow offers optimum safety for the ope rator thanks to the locking mechanism. The Fueling nozzle remains connected to the receptacle until the locking mechanism is released by the operator.

TN H_2 (Except TN5 H_2)

TK20-S3 H_2 35MPa ENR Medium-Flow	25 MPa	35 MPa	35 MPa MF*	35 MPa HF**	70 MPa
35 MPa			✓	✓	

*MF = Medium-Flow acc. to ISO 17268-1:2025
** HF = High-Flow acc. to ISO 17268:2012

Application
Fueling nozzle for rapid filling of buses and trucks with hydrogen in self-service operation.

Technical data

Characteristics	Basic version
Purging line Outer / inner diameter	6/4 mm
Nominal Pressure	PN = 35 MPa
Max. Allowable Operating Pressure	MAWP = 48.125 MPa according to ISO 17268 (PS = 481.25 bar)
Medium*	Hydrogen
Media Temperature Range	-40 °C up to +85 °C
Ambient Temperature Range	-40 °C up to +85 °C
Material	Corrosion resistant
Sealing Material	Hydrogen resistant
Nozzle Type	Type C acc. to SAE J2600:2015 and previous resp. ISO 17268:2020 and previous
Coding	H35MF according to ISO 17268-1:2025
Projeto	With plastic thermal protection / Optimized impact protection to protect the data interface / Exchangeable data interface acc. to SAE J2799 / Integrated purging line / Hand grip with magnet
Weight	Approx. 2.65 kg
Medium for Purging	Nitrogen or compressed air
Media Temperature Range Purging Medium	-40 °C to +85 °C (most effective >0 °C)
Flow Rate During Purging	500 Nl/h at max. 12 bar purging pressure
Conformity / Tests / Approvals	IR data interface: SAE J2799 and ATEX, NEC, KTL, CCC Design validation based on ISO 17268-1:2025

* Suitable for pre-cooled hydrogen

Ordering - WEH® TK20-S3 H_2 35 MPa ENR Medium-Flow Fueling nozzle

approx. dimensions (mm)

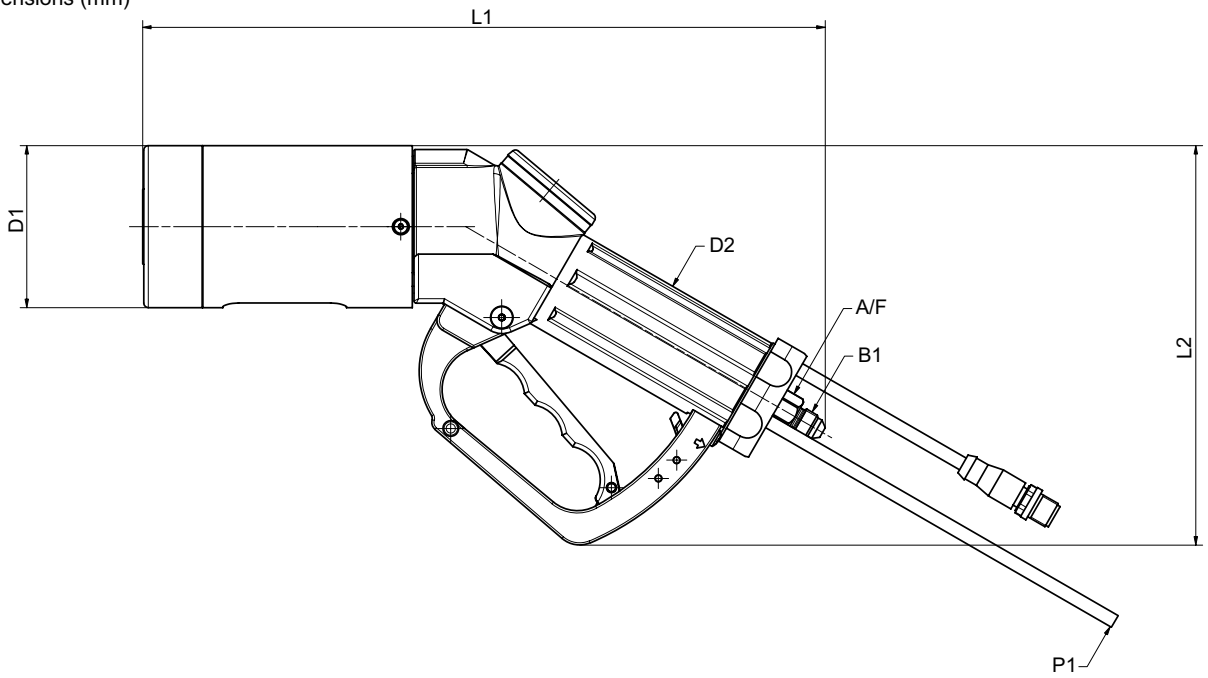

Part no.	Description	Pressure (MAWP)	B1 (male thread)	P1	L1	L2	D1	D2	A/F
C1-188781	TK20-S3H_2 35MPa ENR Medium-Flow	48.125 MPa	UNF 7/16“-20*	6/4	304	178	72	46	15

* according to SAE J514 with 37° outer cone
Fueling assemblies consisting of fueling nozzle, hose set and breakaway coupling are available on request.

Accessories

The following accessories are available for the WEH® TK20-S2 H_2 35 MPa ENR fueling nozzle:

Hose set

Hose set for connecting fueling nozzle and TSA1 H_2 breakaway coupling, complete with filling hose, data cable, purging line and braided protection hose as cover.

Design filling hose: max. operating pressure PS: 49 MPa / nominal bore fitting (TNW): 4.5 mm / media temperature range: -40 °C up to +85 °C



Part no.	B1/B2 (female thread)	P1 / P2	Hose length
E68-174299	UNF 7/16“-20*	Ø6	3 m
E68-174300	UNF 7/16“-20*	Ø6	4 m
E68-174301	UNF 7/16“-20*	Ø6	5 m

* according to SAE JIC, 37° sealing cone * according to SAE JIC, 37° sealing cone

Dispenser mounting

The fueling nozzle can also be used with a dispenser mounting, which is installed on the fuel dispenser.
Advanced dispenser mounting for fueling nozzles
With inductive sensor and M12x1 connector, explosion-proof according to ATEX

approx. dimensions (mm)



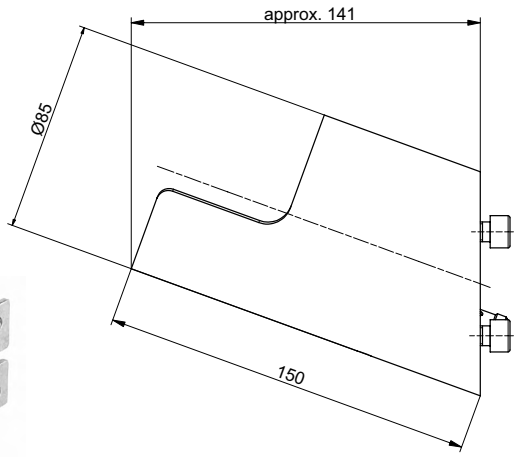

mounting bracket

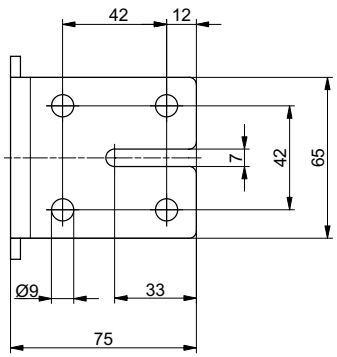

Part no.	Description
C1-190361	Dispenser mounting for TK20 H_2 (Including mounting bracket, installable in three different designs)

Classic dispenser mounting for fueling nozzles

With magnetic field sensor and 2 m cable, explosion-proof according to ATEX

approx. dimensions (mm)



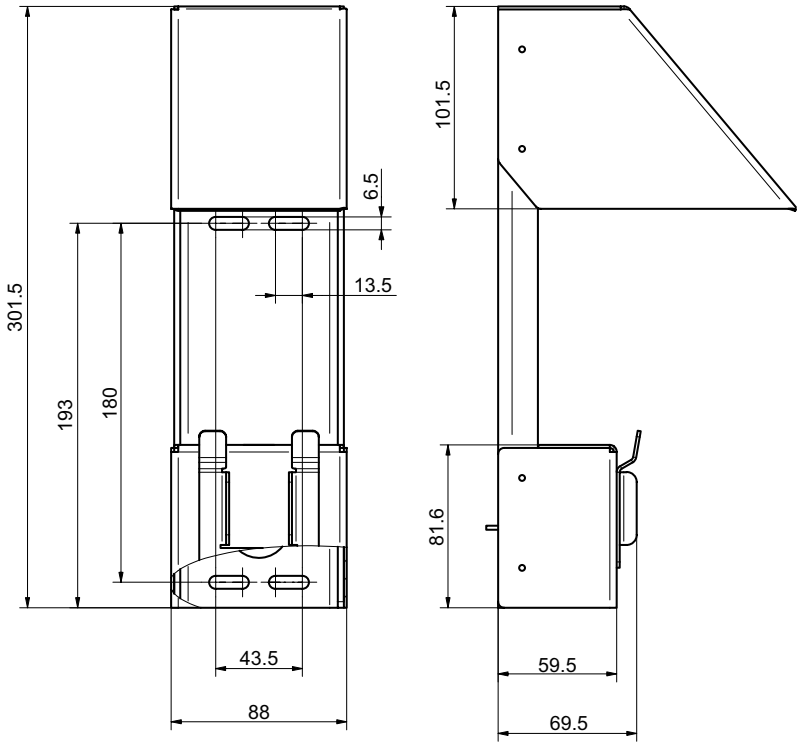

Part No.	Description
C1-191367	Dispenser mounting for TK20 H_2

WEH® TNS1 H_2 Service receptacle

To prevent damage in the fueling nozzle while leak testing during maintenance in the course of which pressure is applied, we recommend the use of a service receptacle. The receptacle also protects the fueling nozzle from dirt ingress whilst not in use.



Part no.	Description
On request	TNS1 H_2 Service receptacle incl. protection cap

WEH® Breakaway coupling

The suitable TSA1 H_2 breakaway coupling, please see page 80.

Data cable

Part no.	Description	Hose length
E68-96194	Data cable suitable for 4 m hose set	4,45m
E68-96193	Data cable for connecting with the converter	3,45m

Other lengths on request

Spare parts

Various parts are available as spares for the WEH® TK20-S3 H_2 35 MPa ENR Medium-Flow Fueling nozzle.



Position	Part No.	Description
1	C1-189532	Impact protection sleeve (incl. screws)
2	C1-189535	IR data interface ATEX, NEC, KTL, CCC (incl. O-ring and screws)
3	C1-189537	Hand grip (incl. locking lever, clamp and screws)
4	C1-161748	Logo cap
5	C1-59738	Logo plate
6	C1-186082	Clamping nut for protective hose
7	C1-157491	Label
8	C1-189538	Handle protector (incl. screws)
	On request	Maintance spray

When ordering please specify the part no. engraved on the fueling nozzle.

Description



Features
- Type C nozzle acc. to SAE J2600 resp. ISO 17268
- Very high flow rate
- Easy operation / single-handed operation
- Max. allowable operating pressure 48.125 MPa (MAWP according to ISO 19880-1:2020)
- Integrated purging line for nitrogen flushing
- WEH® EASY-TURN 250° swivel joint
- Optimized impact protection
- Plastic thermal protection
- Hand grip with magnet
- Compatible with pressure stage H35 Medium-Flow according to ISO 17268-1:2025 (see table below)

new

The WEH® TK20-S3 H_2 35 MPa Medium-Flow Fueling nozzle was developed for fast filling of cars with compressed, gaseous hydrogen (CGH2). Through to the larger nominal width, refueling with 120 g/s or higher is possible. In addition, this filling nozzle is designed for a maximum operating pressure of 48.125 MPa (= MAWP according to ISO 19880-1:2020).

The fueling nozzle is additionally equipped with a purging line that allows purging with nitrogen during and after refueling process. This can prevent ingress of moisture and the formation of ice crystals during filling with precooled hydrogen.

The WEH® TK20-S3 H_2 35 MPa Medium-Flow offers optimum safety for the operator thanks to the locking mechanism. The Fueling nozzle remains connected to the receptacle until the locking mechanism is released by the operator.

TN H_2 (Except TN5 H_2)

TK20-S3 H_2 35 MPa Medium-Flow	25 MPa	35 MPa	35 MPa MF*	35 MPa HF**	70 MPa
35 MPa			✓	✓	

*MF = Medium-Flow acc. to ISO 17268-1:2025
**HF = High-Flow acc. to ISO 17268:2012

Application
Fueling nozzle for rapid filling of buses and trucks with hydrogen in self-service operation.

Technical data

Characteristics	Basic version
Purging line Outer / inner diameter	6/4 mm
Nominal Pressure	PN = 35 MPa
Max. Allowable Operating Pressure	MAWP = 48.125 MPa according to ISO 17268 (PS = 481.25 bar)
Medium*	Hydrogen
Media Temperature Range	-40 °C up to +85 °C
Ambient Temperature Range	-40 °C up to +85 °C
Material	Corrosion resistant
Sealing Material	Hydrogen resistant
Nozzle Type	Type C acc. to SAE J2600:2015 and previous resp. ISO 17268:2020 and previous
Coding	H35MF according to ISO 17268-1:2025
Design	With plastic thermal protection / Optimized impact protection / Integrated purging line / Hand grip with magnet
Weight	Approx. 2.65 kg
Medium for Purging	Nitrogen or compressed air
Media Temperature Range Purging Medium	-40°C to +85°C (most effective >0°C)
Flow Rate During Purging	500 Nl/h at max. 12 bar purging pressure
Conformity / Tests / Approvals	Design validation based on ISO 17268-1:2025

* Suitable for pre-cooled hydrogen

Ordering - WEH® TK20-S3 H_2 35 MPa Medium-Flow Fueling nozzle

approx. dimensions (mm)

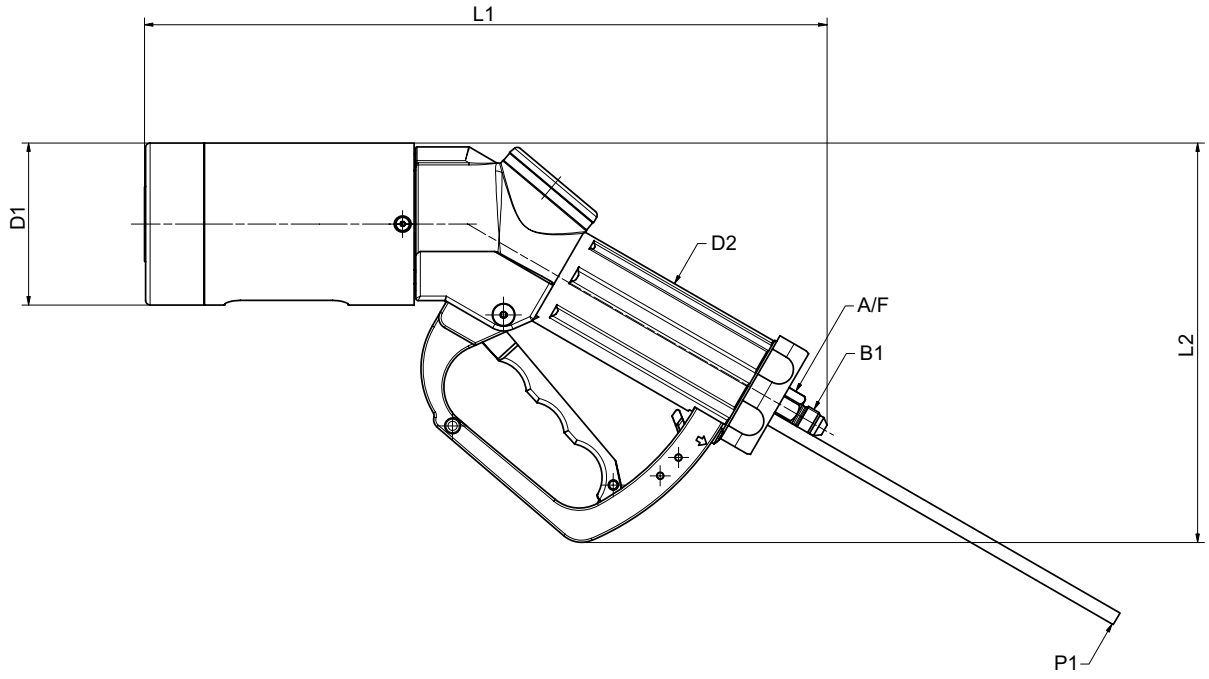

Part no.	Description	Pressure (MAWP)	B1 (male thread)	P1	L1	L2	D1	D2	A/F
C1-188784	TK20-S3H_2 35MPa Medium-Flow	48.125 MPa	UNF 7/16“-20*	6/4	304	178	72	46	15

* according to SAE J514 with 37° outer cone
Fueling assemblies consisting of fueling nozzle, hose set and breakaway coupling are available on request.

Accessories

The following accessories are available for the WEH® TK20-S3 H_2 35 MPa Medium-Flow Fueling nozzle:

Hose set

Hose set for connecting fueling nozzle and TSA1 H_2 breakaway coupling, complete with illing hose, purging line and braided protection hose as cover.

Design filling hose: max. operating pressure PS: 49 MPa / nominal bore fitting (TNW): 4.5 mm / media temperature range: -40°C up to +85°C

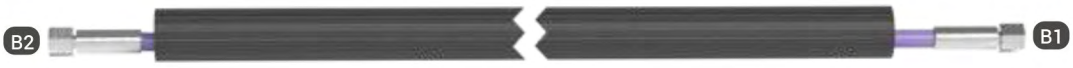

Part no.	B1/B2 (female thread)	P1 / P2	Hose length
C1-189989	UNF 7/16“-20*	Ø6	3 m
C1-189990	UNF 7/16“-20*	Ø6	4 m
C1-189991	UNF 7/16“-20*	Ø6	5 m

* according to SAE JIC, 37° sealing cone

Dispenser mounting

The fueling nozzle can also be used with a dispenser mounting, which is installed on the fuel dispenser.
Advanced dispenser mounting for fueling nozzles
With inductive sensor and M12x1 connector, explosion-proof according to ATEX

approx. dimensions (mm)



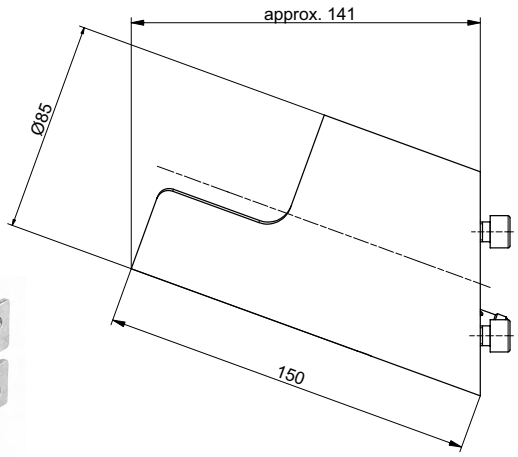

mounting bracket

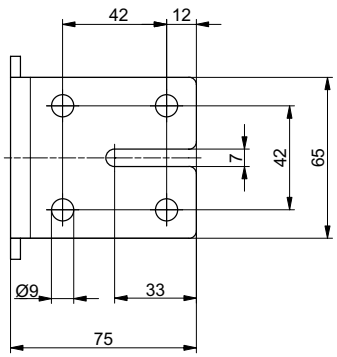

Part no.	Description
C1-190361	Dispenser mounting for TK20 H_2 (Including mounting bracket, installable in three different designs)

Classic dispenser mounting for fueling nozzles

With magnetic field sensor and 2 m cable, explosion-proof according to ATEX

approx. dimensions (mm)



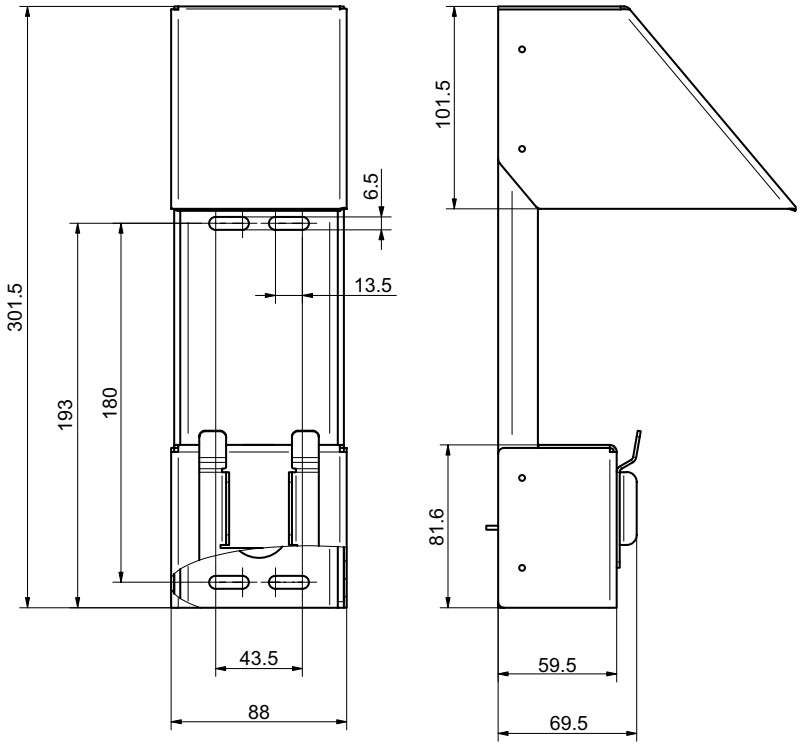

Part No.	Description
C1-191367	Dispenser mounting for TK20 H_2

WEH® TNS1 H_2 Service receptacle

To prevent damage in the fueling nozzle while leak testing during maintenance in the course of which pressure is applied, we recommend the use of a service receptacle. The receptacle also protects the fueling nozzle from dirt ingress whilst not in use.



Part no.	Description
On request	TNS1 H_2 Service receptacle incl. protection cap

WEH® Breakaway coupling

The suitable TSA1 H_2 breakaway coupling, please see page 80.

Spare parts

Various parts are available as spares for the WEH® TK20-S3 H_2 35 MPa Medium-Flow Fueling nozzle.



Position	Part No.	Description
1	C1-189532	Impact protection sleeve (incl. screws)
2	C1-189537	Hand grip (incl. locking lever, clamp and screws)
3	C1-161748	Logo cap
4	C1-59738	Logo plate
5	C1-186082	Clamping nut for protective hose
6	C1-157491	Label
7	C1-189538	Handle protector (incl. screws)
	On request	Maintance spray

When ordering please specify the part no. engraved on the fueling nozzle.

Description



Features
- Type A acc. to SAE J2600 resp. ISO 17268
- Exchangeable data interface (ENR)
- WEH EASY-TURN® 240° swivel joint for actuation lever
- Easy operation
- High flow rate short filling times
- Recirculation of the vented gas
- Plastic thermal protection
- WEH® Jaw locking mechanism
- High-grade materials
- Coding for pressure range / gas type (acc. to table below)

With the WEH® TK16 H_2 ENR the user has a fueling nozzle for hydrogen that makes refueling cars with compressed gaseous hydrogen (CGH_2) even easier than before. The fueling nozzle with exchangeable data interface is easy to operate and thus increases operator comfort.

The integrated swivel joint is located directly on the actuation lever, making it easy to rotate the fueling nozzle to the optimum connection position. The actuating lever can be switched with little effort when connecting and disconnecting.

The internal coding for pressure range and gas type ensures that the TK16 H_2 ENR can be connected to the compatible WEH® Receptacles acc. to the opposite table and also prevents the risk of confusion with natural gas. Furthermore, the fueling nozzle has an exchangeable interface (infrared) for data transfer between the vehicle and the fueling station.

TN H_2 (except TN5 H_2)

TK16 H_2 ENR	25 MPa	35 MPa	35 MPa MF*	35 MPa HF**	70 MPa
35 MPa		✓	✓	✓	✓

* MF = Medium-Flow acc. to ISO 17268-1:2025
** HF = High-Flow acc. to ISO 17268:2012

The WEH® TK16 H_2 ENR offers optimum safety for the operator.
The fueling nozzle remains connected to the receptacle until the gas between inlet valve and receptacle is depressurized.

Application

Fueling nozzle for hydrogen fast filling of cars at self-service fueling stations.

Technical data

Characteristics	Basic version
Technical nominal size (TNW)	8 mm
Nominal Pressure	PN = 35 MPa
Max. allowable operating Pressure	PS = 45 MPa
Media temperature range	-20 °C up to +85 °C
Ambient temperature range	-40 °C up to +85 °C
Material	Corrosion resistant
Sealing material	Hydrogen resistant
Nozzle type	Type A acc. to SAE J2600:2015 and previous resp. ISO 17268:2012 and previous
Design	With plastic thermal protection, gas recirculation and exchangeable data interface acc. to SAE J2799
Weight	Approx. 2.4 kg
Conformity / Tests / Approvals	Fueling nozzle: tests acc. to SAE J2600:2002 IR data interface: SAE J2799 and ATEX, NEC, KTL and CCC

Other designs on request

Ordering - WEH® TK16 H_2 ENR

approx. dimensions (mm)

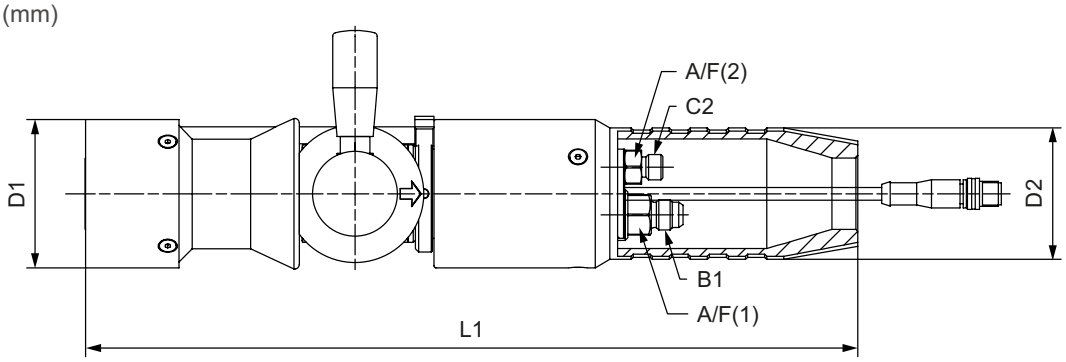

Part No.	Description	Pressure (MAWP)	B1 (male thread)	C2 (male thread)	L1	D1	D2	A/F (1)	A/F (2)
C1-103471-X01	TK16 H_2 ENR	45 MPa	UNF 9/16“-18*	M12x1,5	370	70	62	19	16

* acc to. SAE J514, 37° cone

Fueling assemblies consisting of fueling nozzle, hose set and breakaway coupling are available on request..

Accessories

The following accessories are available for the WEH® TK16 H_2 ENR Fueling nozzle:

Hose set

Hose set for connecting fueling nozzle and TSA1 H_2 breakaway coupling, complete with filling and venting hose, hose fittings, plastic spiral hose and cable for data interface. Not suitable for refueling with pre-cooled hydrogen acc. to SAE J2601.

Design filling/venting hose: max. operating pressure PS: 45 MPa / nominal bore fitting (TNW): 4.5 mm (filling hose) resp. 2 mm (venting hose) / media temperature range: -20 °C up to +90 °C



Part No.	B1/B2 (female thread)	C1/C2 (female thread)	Hose length
C1-90698	UNF 9/16“-18*	M12x1,5	3 m
C1-94428	UNF 9/16“-18*	M12x1,5	4 m
C1-94429	UNF 9/16“-18*	M12x1,5	5 m

* acc. to SAE JIC, 37° cone

Dispenser mounting

Mounting for safe attachment of the fueling nozzle to the dispenser.

Part no.	Description
On request	Dispenser mounting

WEH® TNS1 H_2 Service receptacle

To prevent damage in the fueling nozzle while purging or leak testing during maintenance in the course of which pressure is applied, we recommend the use of a service receptacle. The receptacle also protects the fueling nozzle from dirt ingress whilst not in use.



Part no.	Description
C1-148079	TNS1 H_2 Service receptacle incl. protection cap

WEH® Breakaway coupling

For the suitable TSA1 H_2 breakaway coupling, please see page 80.

Data cable

Part no.	Description	Hose length
E68-96194	UNF 9/16“-18*	4,45 m
E68-96193	UNF 9/16“-18*	3,45 m

Other lengths on request

Spare parts

Various parts are available as spares for the WEH® TK16 H_2 ENR Fueling nozzle.



Position	Part No.	Description
1	W180567	Impact protection (incl. 4 countersunk screws)
2	W180569	IR data interface (incl. o-ring and grub screw)
3	W72504	Actuation lever
4	E80-163068	Cover plate
5	W150340	Protection sleeve (incl. 3 countersunk screws)
	On request	Maintenance spray

Fueling nozzle

TK16 H_2

Description

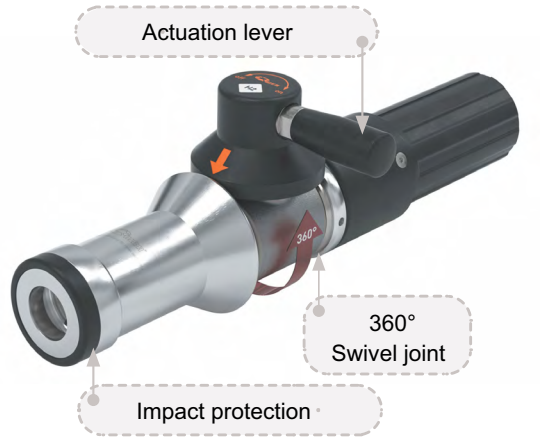

Features
- Type A acc. to SAE J2600 resp. ISO 17268
- Compatible with WEH® TN1 H_2 Receptacle profile
- WEH EASY-TURN® 360° swivel joint for actuation lever
- Easy operation
- High flow rate short filling times
- Recirculation of the vented gas
- Plastic thermal protection
- WEH® Jaw locking mechanism
- High-grade materials
- Coding for pressure range / gas type (acc. to table below)

The WEH® TK16 H_2 Fueling nozzle makes refueling cars with compressed gaseous hydrogen (CGH_2) so much easier. The TK16 H_2 is very light in weight and therefore easy to operate.

The integrated swivel joint is located directly on the actuation lever, making it easy to rotate the fueling nozzle to the optimum connection position. The actuating lever can be switched with little effort when connecting and disconnecting.

The internal coding for pressure range and gas type ensures that the TK16 H_2 can be connected to the compatible WEH® Receptacles acc. to the opposite table and also prevents the risk of confusion with natural gas.

TK16 H_2 \ TN H_2 (Except TN5 H_2)	25 MPa	35 MPa	35 MPa MF*	35 MPa HF*	70 MPa
25 MPa	✓	✓	✓	✓	✓
35 MPa		✓	✓	✓	✓

* MF = Medium-Flow acc. to ISO 17268-1:2025
**HF = High-Flow acc. to ISO 17268:2012

The WEH® TK16 H_2 offers optimum safety for the operator.
The fueling nozzle remains connected to the receptacle until the gas between inlet valve and receptacle is depressurized.

Application
Fueling nozzle for hydrogen fast filling of cars at self-service fueling stations.

Technical data

Characteristics	Basic version
Technical nominal size (TNW)	8 mm
Technical nominal size (TNW)	PN = 25 MPa / PN = 35 MPa
Max. allowable operating Pressure	PS = 45 MPa
Media temperature range	-20 °C up to +85 °C
Ambient temperature range	-40 °C up to +85 °C
Material	Corrosion resistant
Sealing material	Hydrogen resistant
Nozzle type	Type A acc. to SAE J2600:2015 and previous resp. ISO 17268:2012 and previous
Design	With plastic thermal protection and gas recirculation
Weight	Approx. 1.8 kg
Conformity / Tests / Approvals	Tests acc. to SAE J2600:2002

Other designs on request

Ordering - WEH® TK16 H_2 Fueling nozzle

approx. dimensions (mm)

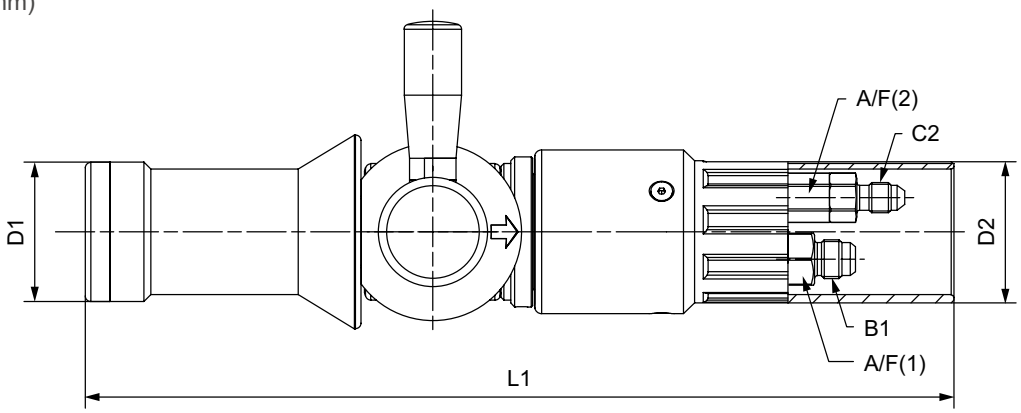

Part No.	Description	Pressure (MAWP)	B1 (male thread)	C2 (male thread)	L1	D1	D2	A/F (1)	A/F (2)
C1-45695-X4-X01	TK16 H_2 25 MPa	35 MPa	UNF 9/16“-18*	UNF 7/16“-20*	319	51	52	19	16
C1-45696-X5-X01	TK16 H_2 35 MPa	45 MPa	UNF 9/16“-18*	UNF 7/16“-20*	324	51	52	19	16

* acc. to SAE J514, 37° cone
Fueling assemblies consisting of fueling nozzle, hose set and breakaway coupling are available on request.

Accessories

The following accessories are available for the WEH® TK_{16} H_2 Fueling nozzle:

Hose set

Hose set for connecting fueling nozzle and TSA1 H_2 breakaway coupling, complete with filling and venting hose, fittings and press-fittings supported by coil spring stubs. Not suitable for refueling with pre-cooled hydrogen acc. to SAE J2601.

Design filling/venting hose: max. operating pressure PS: 45 MPa / technical nominal size (TNW): 4.5 mm / media tempera ture range: -20 °C up to +90 °C



Part No.	B1/B2 (female thread)	C1/C2 (female thread)	Hose length
C1-60917	UNF 9/16“-18*	UNF 7/16“-20*	3 m
C1-60920	UNF 9/16“-18*	UNF 7/16“-20*	4 m
C1-60923	UNF 9/16“-18*	UNF 7/16“-20*	5 m

* acc. to SAE JIC, 37° cone

Dispenser mounting

Mounting for safe attachment of the fueling nozzle to the dispenser.

Part No.	Description
On request	Dispenser mounting

WEH® TNS1 H_2 Service receptacle

To prevent damage in the fueling nozzle while leak testing during maintenance in the course of which pressure is applied, we recommend the use of a service receptacle. The receptacle also protects the fueling nozzle from dirt ingress whilst not in use.



Part no.	Description
C1-148079	TNS1 H_2 Service receptacle incl. protection cap

WEH® Breakaway couplings

For the suitable TSA1 H_2 breakaway coupling or TSA2 H_2 inline breakaway coupling, please see page 80 resp. 88.

Spare parts

Various parts are available as spares for the WEH® TK16 H_2 Fueling nozzle.



Position	Part No.	Description
1	E80-176344	Impact protection
2	W72504	Actuation lever
3	E80-163068	Cover plate
4	W136178	Protection sleeve (incl. 3 countersunk screws)
	On request	Maintenance spray

Description



Features
- Type A acc. to SAE J2600 resp. ISO 17268
- Integrated infrared data interface
- WEH EASY-TURN® 240° swivel joint for actuation lever
- Easy operation
- Increased flow rate even shorter filling times
- Recirculation of the vented gas
- Plastic thermal protection
- WEH® Jaw locking mechanism
- High-grade materials
- Coding for pressure range / gas type (acc. to table below)

The WEH® TK16 H2 High-Flow Fueling nozzle with data interface enables an even faster filling of buses and trucks with hydrogen. Due to the increased flow rate, the already short filling times have been shortened even further.
The integrated swivel joint is located directly on the actuation lever, making it easy to rotate the fueling nozzle to the optimum connection position. The actuating lever can be switched with little effort when connecting and disconnecting.

The internal coding for pressure range and gas type ensures that the TK16 H_2 High Flow with data interface can be connected to the compatible WEH® Receptacles acc. to the opposite table and also prevents the risk of confusion with natural gas. Furthermore, the fueling nozzle has an interface (infrared) for data transfer between the vehicle and the fueling station.

The WEH® TK16 H_2 High-Flow with data interface offers optimum safety for the operator. The fueling nozzle remains connected to the receptacle until the gas between inlet valve and receptacle is depressurized.

TN H_2 (Except TN5 H_2)

TK16 H_2 HF IR	25 MPa	35 MPa	35 MPa MF*	35 MPa HF*	70 MPa
35 MPa HF*			✓	✓	

* MF = Medium-Flow acc. to ISO 17268-1:2025
** HF = High-Flow acc. to ISO 17268:2012

Application
Fueling nozzle for hydrogen fast filling of buses and trucks at self-service fueling stations.

Technical data

Characteristics	Basic version
Technical nominal size (TNW)	8 mm
Nominal Pressure	PN = 35 MPa
Max. allowable operating Pressure	MAWP = 45 MPa (PS = 450 bar)
Media temperature range	-20 °C up to +85 °C
Ambient temperature range	-40 °C up to +85 °C
Material	Corrosion resistant
Sealing material	Hydrogen resistant
Nozzle type	Type A acc. to SAE J2600:2015 and previous resp. ISO 17268:2012 and previous
Design	With plastic thermal protection, gas recirculation and data interface acc. to SAE J2601
Weight	Approx. 2.4 kg
Conformity / Tests / Approvals	Fueling nozzle: tests acc. to SAE J2600:2002 / IR data interface: ATEX; NEC on request

Other designs on request

Ordering - WEH® TK16 H_2 High-Flow Fueling nozzle with data interface

approx. dimensions (mm)

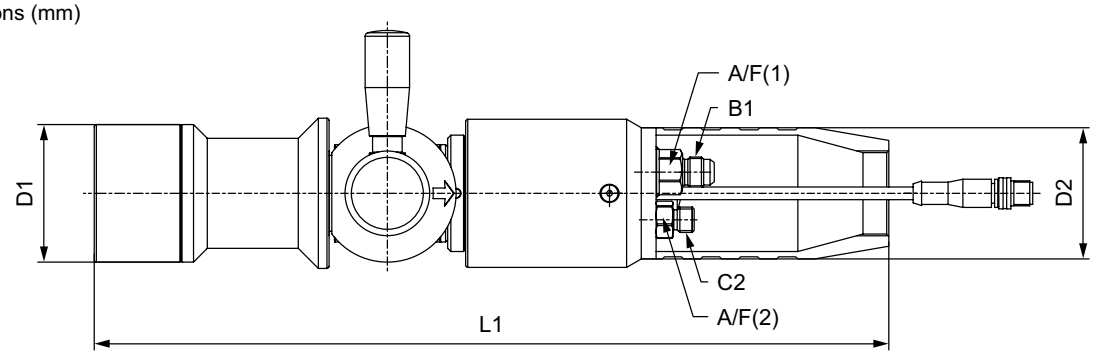

Part No.	Description	Pressure (MAWP)	B1 (male thread)	C2 (male thread)	L1	D1	D2	A/F (1)	A/F (2)
C1-103471-X01	TK16 H2 High-Flow (ATEX IR data interface)	45 MPa	UNF 9/16“-18*	M12x1,5	381	65	62	19	16

* acc. to SAE J514, 37° cone

On request the TK16 H_2 High-Flow Fueling nozzle with data interface is also available with NEC approval.
Fueling assemblies consisting of fueling nozzle, hose set and breakaway coupling are available on request.

Accessories

The following accessories are available for the WEH® TK16 H_2 High-Flow Fueling nozzle with data interface:

Hose set

Hose set for connecting fueling nozzle and TSA1 H_2 breakaway coupling, complete with filling and venting hose, hose fittings, plastic spiral hose and cable for data interface. Not suitable for refueling with pre-cooled hydrogen acc. to SAE J2601.
Design filling/venting hose: max. operating pressure PS: 45 MPa / nominal bore fitting (TNW): 4.5 mm (filling hose) resp. 2 mm (venting hose) / media temperature range: -20 °C up to +90 °C



Part No.	B1/B2 (female thread)	C1/C2 (female thread)	Hose length
C1-90698	UNF 9/16“-18*	M12x1,5	3 m
C1-94428	UNF 9/16“-18*	M12x1,5	4 m
C1-94429	UNF 9/16“-18*	M12x1,5	5 m

* acc. to SAE JIC, 37° cone

Dispenser mounting

Mounting for safe attachment of the fueling nozzle to the dispenser.

Not switch actuated dispenser mounting with protection of front sleeve

approx. dimensions (mm)

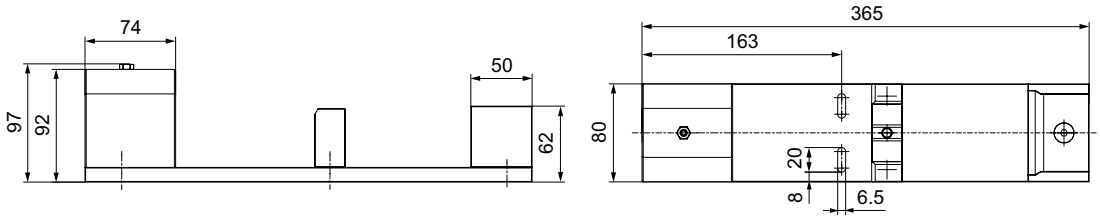

Switch actuated dispenser mounting with weather protection
approx. dimensions (mm)

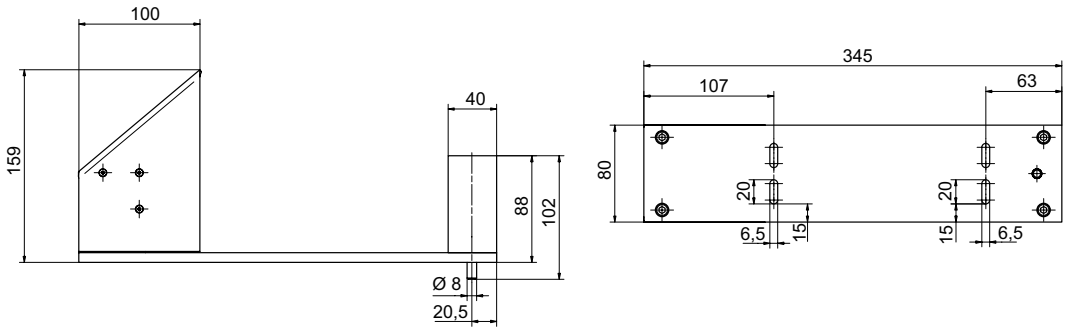

Switch actuated dispenser mounting with weather protection and angle plate 15°
approx. dimensions (mm)

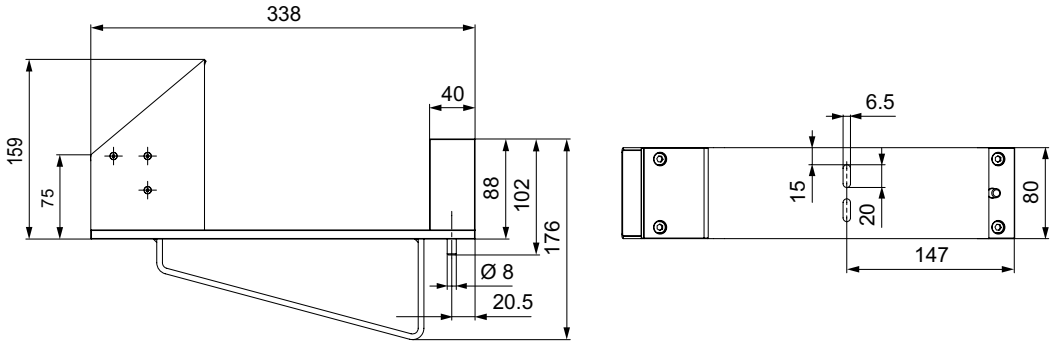



Part No.	Description
C1-94671	Dispenser mounting (not switch actuated) with protection of front sleeve
C1-94671	Dispenser mounting (switch actuated) with weather protection
C1-114632	Dispenser mounting (switch actuated) with weather protection and angle plate 15°

WEH® TNS1 H_2 Service receptacle

To prevent damage in the fueling nozzle while leak testing during maintenance in the course of which pressure is applied, we recommend the use of a service receptacle. The receptacle also protects the fueling nozzle from dirt ingress whilst not in use.



Part no.	Description
C1-148079	TNS1 H_2 Service receptacle incl. protection cap

WEH® Breakaway coupling

For the suitable TSA1 H_2 breakaway coupling, please see page 80 resp. 88.

Data cable

Part no.	Description	Hose length
E68-96194	UNF 9/16“-18*	4,45 m
E68-96193	UNF 9/16“-18*	3,45 m

Other lengths on request

Spare parts

Various parts are available as spares for the WEH® TK16 H_2 High-Flow Fueling nozzle with data interface.



Position	Part No.	Description
1	W72504	Actuation lever
2	E80-163068	Cover plate
3	W150340	Protection sleeve (incl. 3 countersunk screws)
	On request	Maintenance spray

Description



Features
- Type A acc. to SAE J2600 resp. ISO 17268
- Compatible with WEH® TN1 H_2 High-Flow Receptacle profile
- WEH EASY-TURN® 360° swivel joint for actuation lever
- Easy operation
- Increased flow rate even shorter filling times
- Recirculation of the vented gas
- Plastic thermal protection
- WEH® Jaw locking mechanism
- High-grade materials
- Coding for pressure range / gas type (acc. to table below)

The WEH® TK16 H_2 High-Flow Fueling nozzle enables an even faster filling of buses and trucks with hydrogen. Due to the increased flow rate, the already short filling times have been shortened even further. The integrated swivel joint is located directly on the actuation lever, making it easy to rotate the fueling nozzle to the optimum connection position. The actuating lever can be switched with little effort when connecting and disconnecting.

The internal coding for pressure range and gas type ensures that the TK16 H_2 High Flow can be connected to the compatible WEH® Receptacles acc. to the opposite table and also prevents the risk of confusion with natural gas.

TN H_2 (Except TN5 H_2)

TK16 H_2 HF	25 MPa	35 MPa	35 MPa MF*	35 MPa HF**	70 MPa
35 MPa HF*			✓	✓	

* MF = Medium-Flow acc. to ISO 17268-1:2025
** HF = High-Flow acc. to ISO 17268:2012

The WEH® TK16 H2High-Flow offers optimum safety for the operator.
The fueling nozzle remains connected to the receptacle until the gas between inlet valve and receptacle is depressurized.

Application
Fueling nozzle for hydrogen fast filling of buses and trucks at self-service fueling stations.

Technical data

Characteristics	Basic version
Technical nominal size (TNW)	8 mm
Nominal Pressure	PN = 35 MPa
Max. allowable operating Pressure	MAWP = 45 MPa (PS = 450 bar)
Media temperature range	-20 °C up to +85 °C
Ambient temperature range	-40 °C up to +85 °C
Material	Corrosion resistant
Sealing material	Hydrogen resistant
Nozzle type	Type A acc. to SAE J2600:2015 and previous resp. ISO 17268:2012 and previous
Design	With plastic thermal protection and gas recirculation
Weight	Approx. 1.8 kg
Conformity / Tests / Approvals	Tests acc. to SAE J2600:2002

Other designs on request

Ordering - WEH® TK16 H_2 High-Flow Fueling nozzle

approx. dimensions (mm)

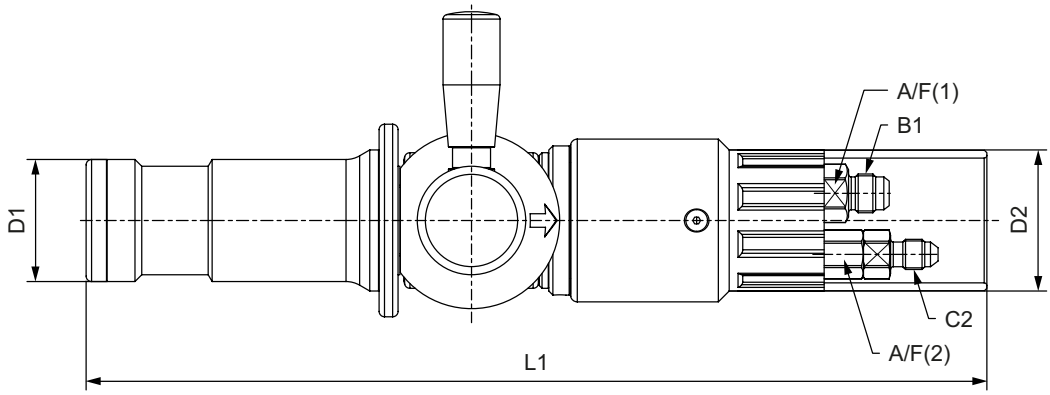

Part No.	Description	Pressure (MAWP)	B1 (male thread)	C2 (male thread)	L1	D1	D2	A/F (1)	A/F (2)
C1-85042-X01	TK16 H_2 High flow	45 MPa	UNF 9/16“-18*	UNF 7/16“-20*	338	45	52	19	16

* acc. to SAE J514, 37° cone

Fueling assemblies consisting of fueling nozzle, hose set and breakaway coupling are available on request.

Accessories

The following accessories are available for the WEH® TK_{16} H_2 High-Flow Fueling nozzle:

Hose set

Hose set for connecting fueling nozzle and TSA1 H_2 breakaway coupling, complete with filling and venting hose, fittings and press-fittings supported by coil spring stubs. Not suitable for refueling with pre-cooled hydrogen acc. to SAE J2601.
Design filling/venting hose:
max. operating pressure PS: 45 MPa / technical nominal size (TNW): 4.5 mm / media temperature range: -20 °C up to +90 °C



Part No.	B1/B2 (female thread)	C1/C2 (female thread)	Hose length
C1-60917	UNF 9/16“-18*	UNF 7/16“-20*	3 m
C1-60920	UNF 9/16“-18*	UNF 7/16“-20*	4 m
C1-60923	UNF 9/16“-18*	UNF 7/16“-20*	5 m

* acc. to SAE JIC, 37° cone

Dispenser mounting

Mounting for safe attachment of the fueling nozzle to the dispenser.

Switch actuated (with pin) resp. not switch actuated dispenser mounting

approx. dimensions (mm)

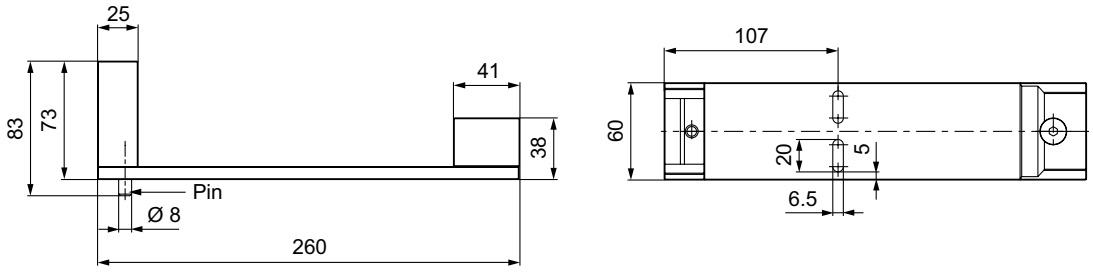

Switch actuated dispenser mounting with weather protection

approx. dimensions (mm)

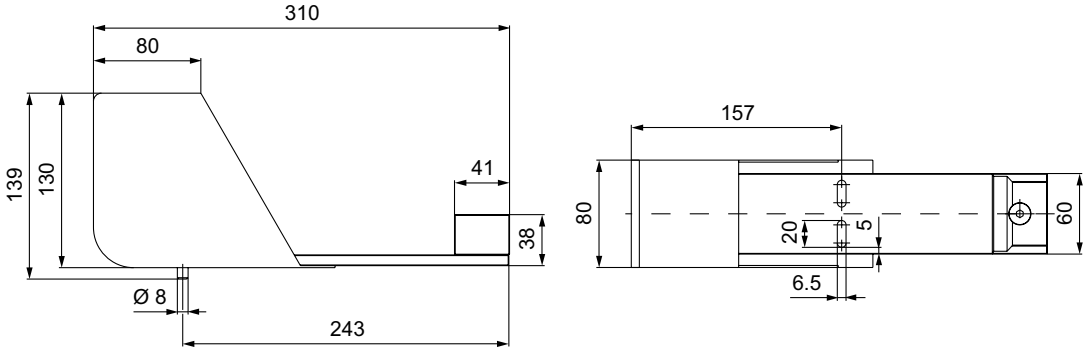



Part No.	Description
C1-86860	Dispenser mounting (switch actuated)
C1-109880	Dispenser mounting (not switch actuated)
C1-109678	Dispenser mounting (switch actuated) with weather protection

WEH® TNS1 H₂ Service receptacle

To prevent damage in the fueling nozzle while leak testing during maintenance in the course of which pressure is applied, we recommend the use of a service receptacle. The receptacle also protects the fueling nozzle from dirt ingress whilst not in use.



Part no.	Description
C1-148079	TNS1 H₂ Service receptacle incl. protection cap

WEH® Breakaway couplings

For the suitable TSA1 H₂ breakaway coupling or TSA2 H₂ inline breakaway coupling, please see page 80 resp. 88.

Spare parts

Various parts are available as spares for the WEH® TK16 H_2 High-Flow Fueling nozzle.



Position	Part No.	Description
1	E80-172676	Impact protection
2	W72504	Actuation lever
3	E80-163068	Cover plate
4	W136178	Protection sleeve (incl. 3 countersunk screws)
	On request	Maintenance spray

Description

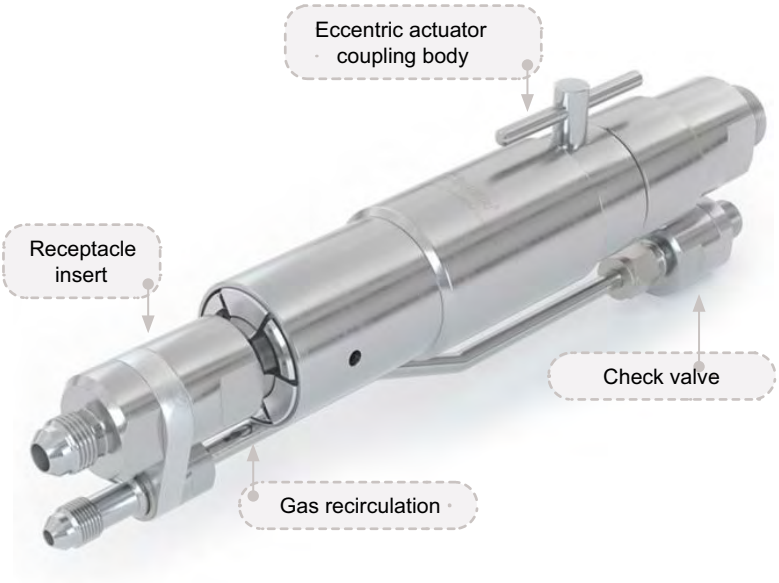

Features
- Reusable without factory servicing
- Installation at the dispenser
- Small compact design
- Version with and without gas recirculation
- Integrated cleanable filter (20 µm or 40 µm)
- Check valve at venting line
- No additional tool necessary

The WEH® TSA1 H_2 Breakaway coupling offers additional safety for your car fueling station. The breakaway is installed between the dispenser and the filling hose or dispenser and filling/venting hose.

In the event of unexpected tensile forces, e.g. a vehicle driving away with a connected fueling nozzle, the breakaway separates the connections between dispenser and hose(s) in a controlled manner while sealing both ends.
Damage to the vehicles receptacle, the fueling nozzle and the dispenser can thus be prevented as far as possible.
The breakaway coupling can be reused after a functional test.
The integrated filter cleans the hydrogen from dirt ingress and can be cleaned easily and quickly during maintenance.

The WEH® TSA1 H_2 Breakaway coupling consists of a coupling body, a receptacle insert and, depending on the version, of a gas recirculation with check valve. A dispenser mounting is available as an accessory.
For fueling nozzle with data interface, the TSA1 H_2 is also available with a data cable that can be mounted on the mounting.

Refueling kits are also available. They consist of a fueling nozzle, hose set, tear-off protection, fuel pump holder, and data cable. Please inquire for more information.

Application
Breakaway coupling for car hydrogen fueling stations for direct installation at the dispenser.

Technical data

Characteristics	Basic version
Technical nominal size (TNW)	Depending on design
Nominal Pressure	PN = 35 MPa
Max. allowable operating Pressure	MAWP = 49 MPa, 45 MPa according to ISO 19880-1 (PS = 490 bar, 450 bar), depending on design
Media temperature range	TSA1 H_2 for TK17 H2 fueling nozzles: -40 °C up to +85 °C TSA1 H_2 for TK16 H2 fueling nozzles: -20 °C up to +85 °C
Ambient temperature range	-40 °C up to +85 °C
Breakaway force	222 – 667 N
Material	Corrosion resistant stainless steel, aluminum
Sealing material	Hydrogen resistant
Design	Depending on design: With filter (20 µm or 40 µm) With or without gas recirculation With or without dispenser mounting With dispenser mounting and data cable (only versions for fueling nozzles with data interface)

Other designs on request

Ordering - WEH® TSA1 H_2 Breakaway coupling for TK20-S2 H_2 35 MPa und TK20-S3 $H_2$35 MPa Medium-Flow

approx. dimensions (mm)

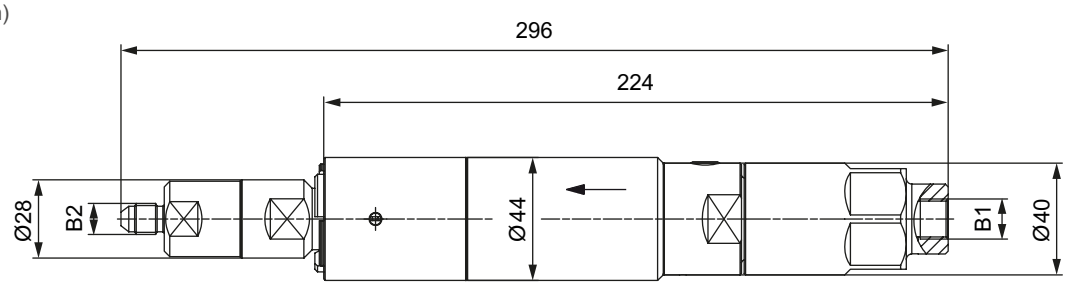

Part No.	Description	TNW	Pressure (MAWP)	B1 (female thread)	C2 (male thread)
C1-174444	TSA1 H_2 with filter (20 µm)	4mm	49 MPa	UNF 9/16“-18*	UNF 7/16“-20*

* MP-fitting, 60° inner cone
** acc. to SAE J514, 37° cone



Ordering - WEH® TSA1 H₂ Breakaway coupling with male thread for TK16 H₂ + High-Flow

approx. dimensions (mm)

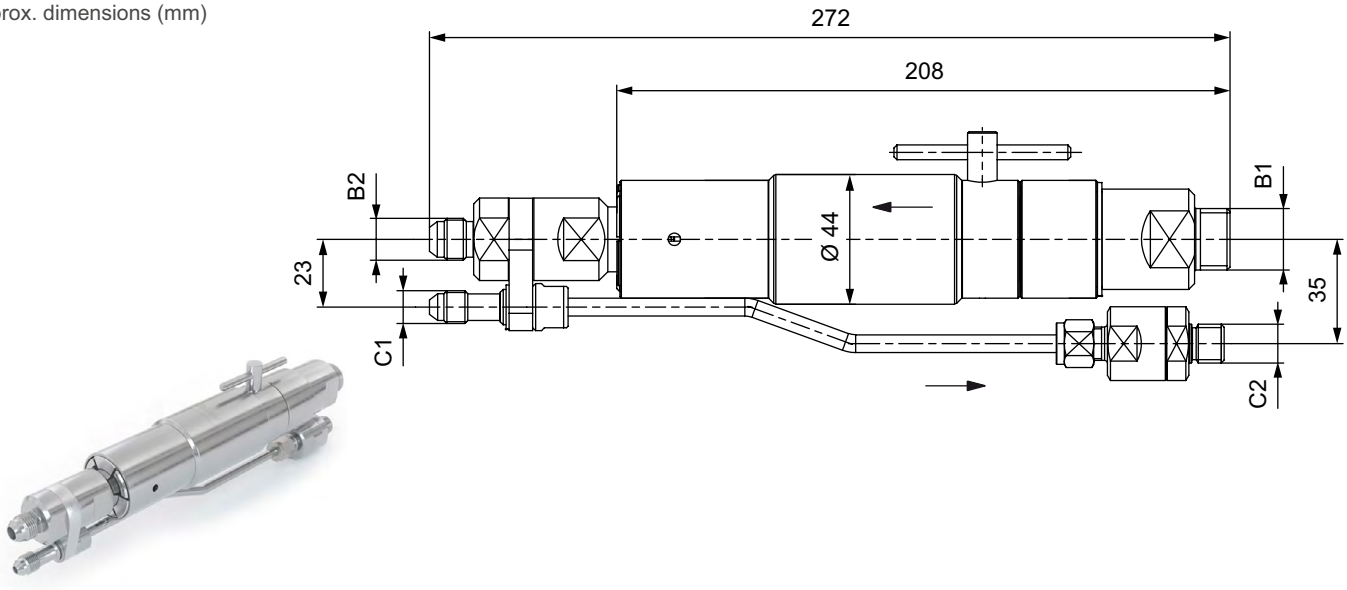

Part No.	Description	TNW	Pressure (MAWP)	B1 (male thread)	B2 (male thread)	C1 (male thread)	C2 (male thread)
C1-18834-X7-X01	TSA1 H₂ with filter (40 µm)	7mm	45 MPa	G1/2“	UNF 9/16“-18*	UNF 7/16“-20*	G1/4“
C1-67741-X1-X01	TSA1 H₂ with filter (20 µm)	7mm	45 MPa	G1/2“	UNF 9/16“-18*	UNF 7/16“-20*	G1/4“

* acc. to DIN EN ISO 228-1
** acc. to SAE J514, 37° cone

Ordering - WEH® TSA1 H₂ Breakaway coupling with female thread for TK16 H₂+ High-Flow

approx. dimensions (mm)

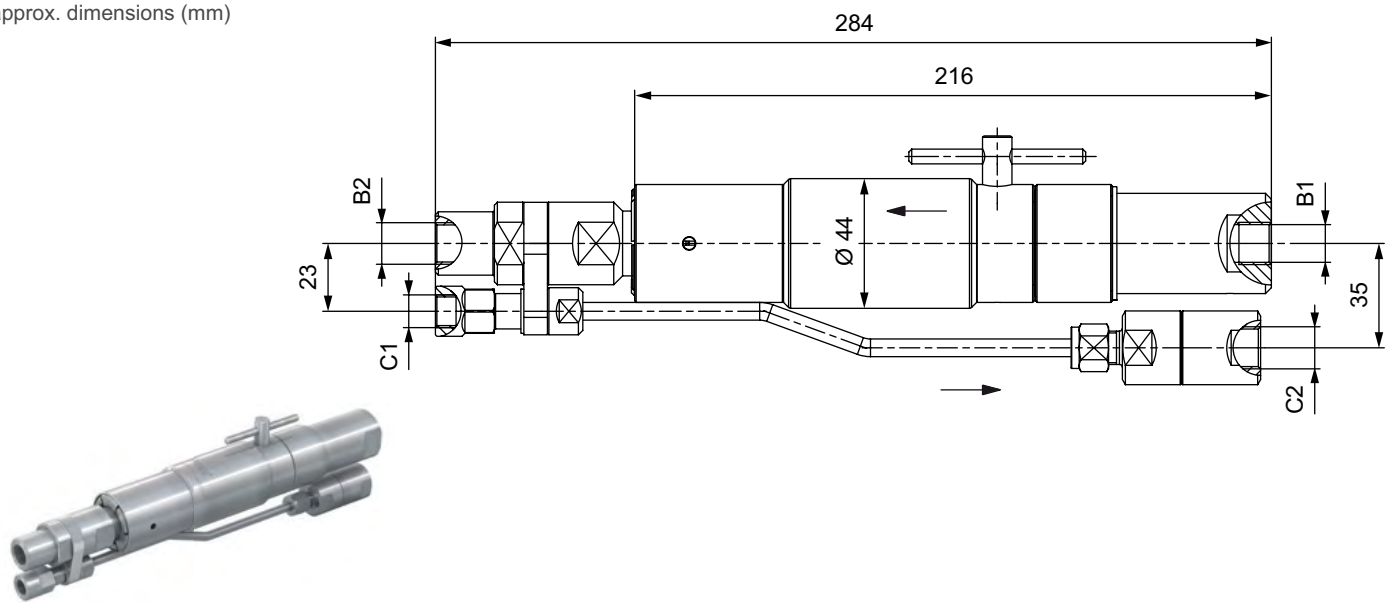

Part No.	Description	TNW	Pressure (MAWP)	B1/B2 (female thread)	C1 (female thread)	C2 (female thread)
C1-99345-X01	TSA1 H₂ with filter (40 µm)	5mm	45 MPa	UNF 9/16“-18	UNF 7/16“-20*	UNF 9/16“-18*

* MP-fitting, 60° inner cone

Ordering - WEH® TSA1 H_2 Breakaway coupling with male thread for TK16 H_2 + High-Flow

approx. dimensions (mm)

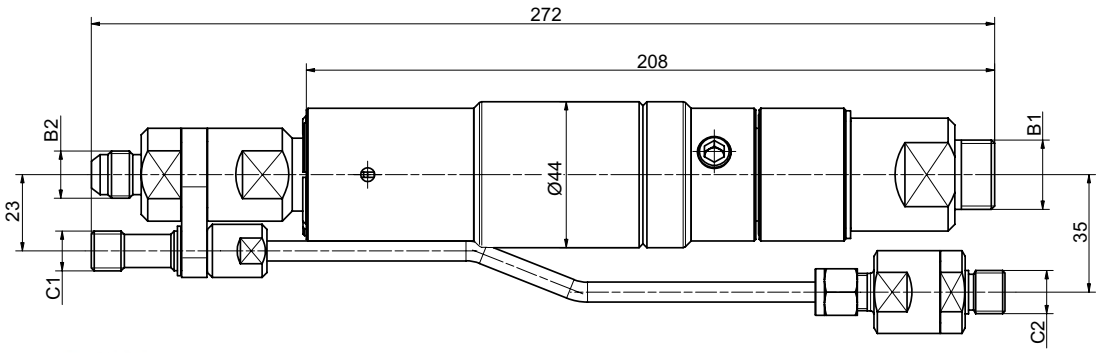

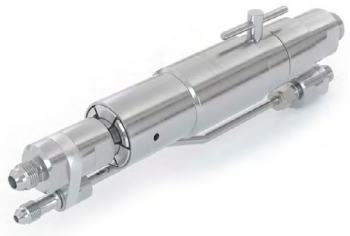

Part No.	Description	TNW	Pressure (MAWP)	B1 (male thread)	B2 (male thread)	C1 (male thread)	C2 (male thread)
C1-91911-X01	TSA1 H_2 com filtro (40 µm)	8mm	45 MPa	G1/2“**	UNF 9/16“-18*	M12X1,5***	G1/4“**

*according to DIN EN ISO 228-1
**according to SAE J514, 37° cone
***24° inner cone

Accessories

The following accessories are available for the WEH® TSA1 H₂ breakaway coupling

Dispenser mounting

The breakaway coupling can also be used in combination with a mounting. The mounting is mounted on the dispenser. A guide tube is integrated into the bracket, which ensures a straight pull force regardless of the direction of pull.

Dispenser mounting for fueling nozzles without data interface

approx. dimensions (mm)



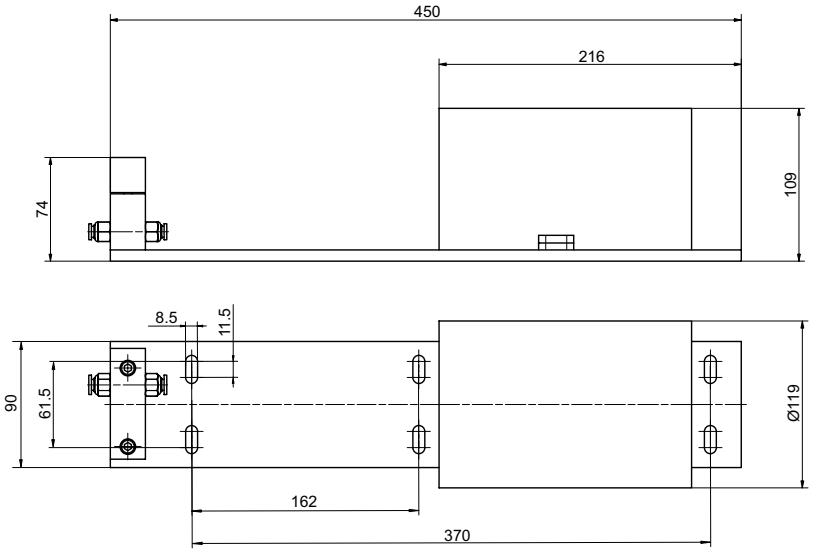

Part No.	Description
C1-191133	Dispenser mounting for TSA1 H₂ for fueling nozzles without data interface

Dispenser mounting for fueling nozzles with data interface

approx. dimensions (mm)



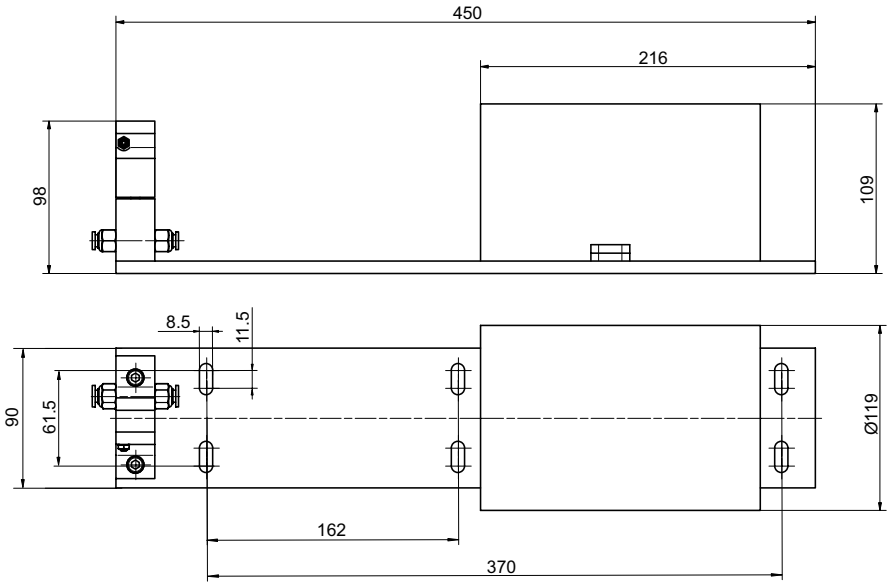

Part No.	Description
C1-191132	Dispenser mounting for TSA1 H₂ for fueling nozzles with data interface

Data cable

Part No.	Description	Length
C1-96193	Data cable (for dispenser side)	3,45m

Hoses

Suitable hoses for the TSA1 H_2 breakaway coupling are available on request.

Mounting for braided protection hose
Mounting for attachment of the braided protection hose to the TSA1 H_2 without gas recirculation.

Part No.	Description
C1-171845	Mounting for braided protection hose (suitable for C1-174444, C1-174446, C1174456)

Spare parts

Various parts are available as spares for the WEH® TSA1 H_2 Breakaway coupling.

Part No.	Description
W159176	Receptacle insert for TSA1 H_2 without gas recirculation (C1-174444, C1-174446, C1-174456)
W94249	Receptacle insert for TSA1 H_2 with gas recirculation (C1-18834-X7-X01, C1-67741-X1-X01)
W108401	Receptacle insert for TSA1 H_2 with gas recirculation (C1-99345-X01)
W108154	Receptacle insert for TSA1 H_2 with gas recirculation (C1-90679-X01)
B200B-123477	Spare seals set for receptacle insert W159176
B200B-119056	Spare seals set for receptacle insert W94249, W108401, W108154
W139032	Spare parts set consisting of a gas recirculation tube (length: approx. 195 mm) and a firmly mounted check valve (C1-18834-X7-X01, C1-67741-X1-X01, C1 90679-X01)
W140024	Spare parts set consisting of a gas recirculation tube (length: approx. 195 mm) and a firmly mounted check valve (C1-99345-X01)
E69-9061	Wire filter insert 40 µm (incl. spring and o-ring)
W67754	Wire filter insert 20 µm (incl. spring and o-ring)

Inline breakaway coupling

TSA2 H_2

Description

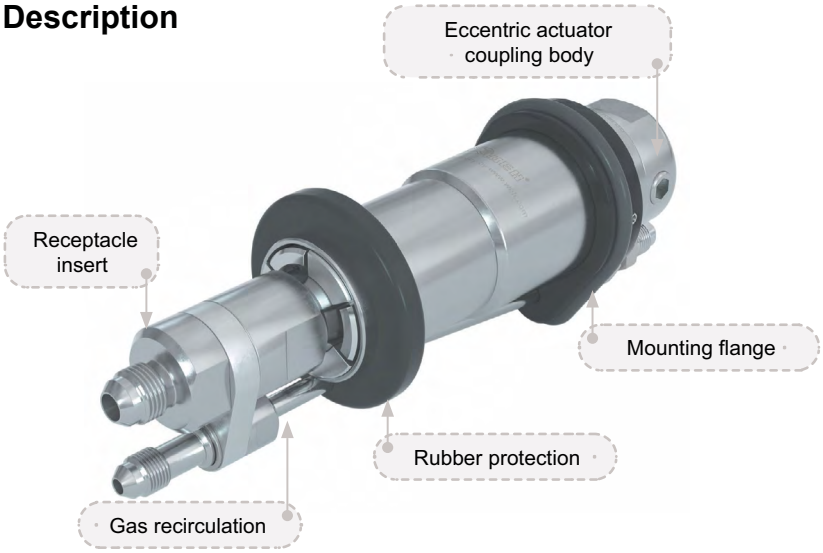

Features
- Reusable without factory servicing
- Installation between the filling and venting hoses
- Small compact design
- Rubber protection and mounting flange incl. impact proctection
- Eccentric actuation via Allen wrench

With the WEH® TSA2 H_2 Breakaway coupling, an inline breakaway coupling is also available for car refueling stations which is installed between the filling and venting hoses.

In the event of unexpected tensile forces, e.g. a vehicle driving away with a connected fueling nozzle, the breakaway separates the connections between dispenser and hoses in a controlled manner while sealing both ends.
Damage to the vehicule's receptacle, the fueling nozzle and the dispenser can thus be prevented as far as possible.
The breakaway coupling can be reused after a functional test.

The WEH® Breakaway coupling consists of a coupling body, a receptacle insert and a gas recirculation.

When using a TSA2 H_2 inline breakaway coupling, we additionally recommend the WEH® TSF2 H_2 Filter (see page 94).
The filter protects the breakaway coupling and fueling nozzle from dirt ingress.

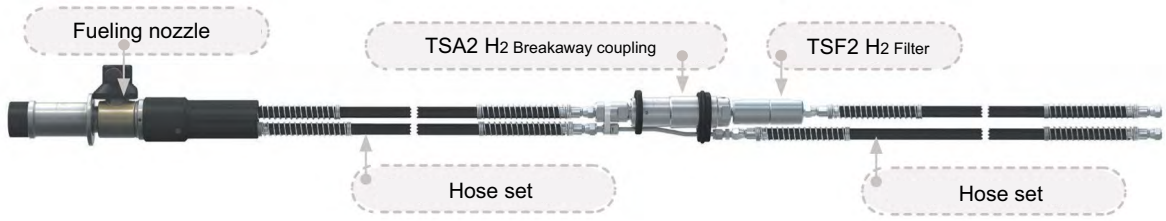

On request we also offer fueling assemblies consisting of fueling nozzle, hose set and inline breakaway coupling.

Application

Inline breakaway coupling for car hydrogen fueling stations for installation between the filling and venting hoses.

Technical data

Characteristics	Basic version
Technical nominal size (TNW)	8 mm
Nominal Pressure	PN = 35 MPa
Max. allowable operating Pressure	MAWP = 45 MPa (PS = 450 bar)
Media temperature range	-20 °C up to +85 °C
Ambient temperature range	-40 °C up to +85 °C
Breakaway force	222 – 667 N
Material	Corrosion resistant stainless steel, aluminum
Sealing material	Hydrogen resistant
Design	With gas recirculation

Other designs on request

Ordering - WEH® TSA2 H2 Inline breakaway coupling for TK16 H2 (+ High-Flow)

approx. dimensions (mm)



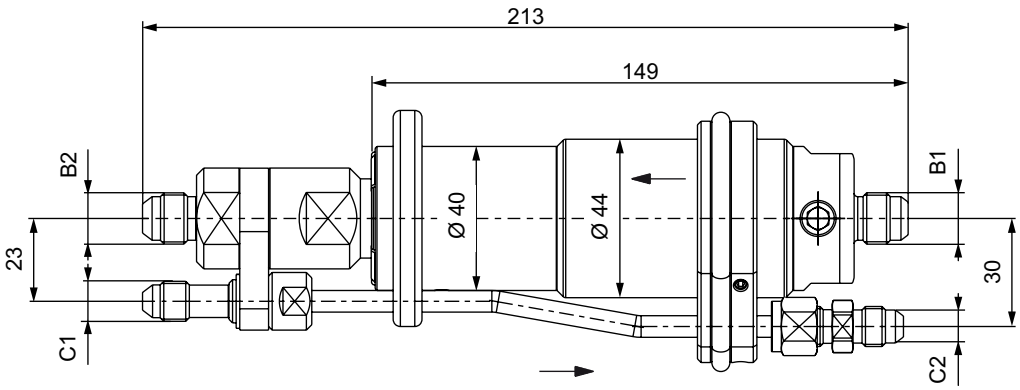

Part No.	Description	TNW	Pressure (MAWP)	B1/B2 (male thread)	C1/C2 (male thread)
C1-77240-X01	TSA2 H2	7mm	45 MPa	UNF 9/16“-18*	UNF 7/16“-20*

* acc. to SAE J514, 37° cone

Accessories

The following accessories are available for the WEH® TSA2 H₂ Inline breakaway coupling:

WEH® TSF2 H₂ Filter

When using a TSA2 H₂ inline breakaway coupling, we additionally recommend the WEH® TSF2 H₂ Filter (see page 90). The filter protects the breakaway coupling and fueling nozzle from dirt ingress. The TSF2 H2is installed as a prefilter in the media inlet between the inline breakaway coupling and the filling hose.

approx. dimensions (mm)



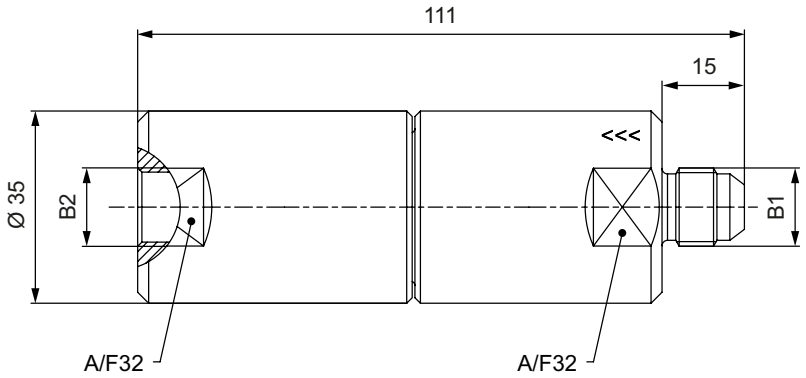

Part No.	Description	Filter (µm)	TNW	Pressure (MAWP)	B1 (male thread)	B2 (female thread)
C1-134710-X01	TSF2 H₂	40	8mm	45 MPa	UNF 9/16“-18*	UNF 9/16“-18*
C1-134711-X01	TSF2 H₂	20	8mm	45 MPa	UNF 9/16“-18*	UNF 9/16“-18*

*acc. to SAE J514, 37° cone

Hoses

Suitable hoses for the TSA2 H₂ inline breakaway coupling are available on request.

Spare parts

Various parts are available as spares for the WEH® TSA2 H_2 Inline breakaway coupling.

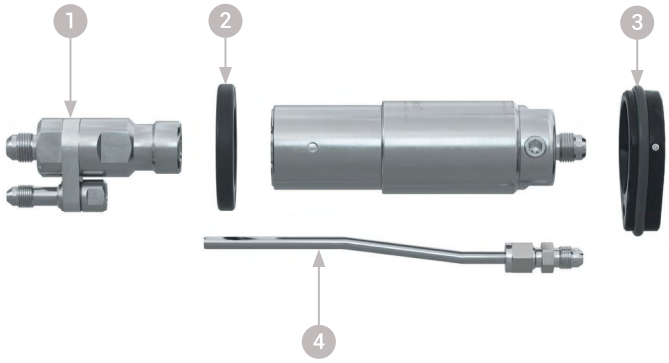

Position	Part No.	Description
1	W94249	Receptacle insert for TSA$_2$ H_2
	B200B-119056	Spare seals set for receptacle insert W94249
2	E80-71324	Front rubber protection
3	W150599	Mounting flange incl. impact protection
4	W139030	Spare part sets consisting of a gas recirculation tube and a firmly mounted fitting

Fueling nozzle

TK25 H_2

Description



Features
- Type A nozzle acc. to SAE J2600 resp. ISO 17268
- Compatible with WEH® TN5 H_2 receptacle profile
- Safe handling due to special safety function when disconnecting
- High flow rate short filling times
- Recirculation of the vented gas
- Plastic thermal protection
- WEH® Jaw locking mechanism
- High-grade materials
- Coding for pressure range / gas type (acc. to table below)

The WEH® TK25 H_2 Fueling nozzle enables easy refueling of buses and trucks
Simply place the TK25 H_2 fueling nozzle onto the receptacle, turn the operating lever by 180° and the vehicle is refueled.

The internal coding for pressure range and gas type ensures that the WEH® TK25 H_2 can be connected to the compatible WEH® Receptacles acc. to the opposite table and also prevents the risk of confusion with natural gas.

TK25 H_2 \ TN5 H_2	25 MPa	35 MPa
35 MPa		✓

The WEH® TK25 H_2 offers optimum safety for the operator.
The fueling nozzle remains connected to the receptacle until the gas between inlet valve and receptacle is depressurized.

Application
Fueling nozzle for hydrogen fast filling of buses and trucks at self-service fueling stations.

Technical data

Characteristics	Basic version
Technical nominal size (TNW)	12 mm
Nominal Pressure	PN = 35 MPa
Max. allowable operating Pressure	MAWP = 45 MPa (PS = 450 bar)
Media temperature range	-20 °C up to +85 °C
Ambient temperature range	-40 °C up to +85 °C
Material	Corrosion resistant
Sealing material	Hydrogen resistant
Nozzle type	Type A acc. to SAE J2600:2015 and previous resp. ISO 17268:2012 and previous
Design	With plastic thermal protection and gas recirculation
Weight	Approx. 4.6 kg

Other designs on request

Ordering - WEH® TK25 H₂ Fueling nozzle

approx. dimensions (mm)

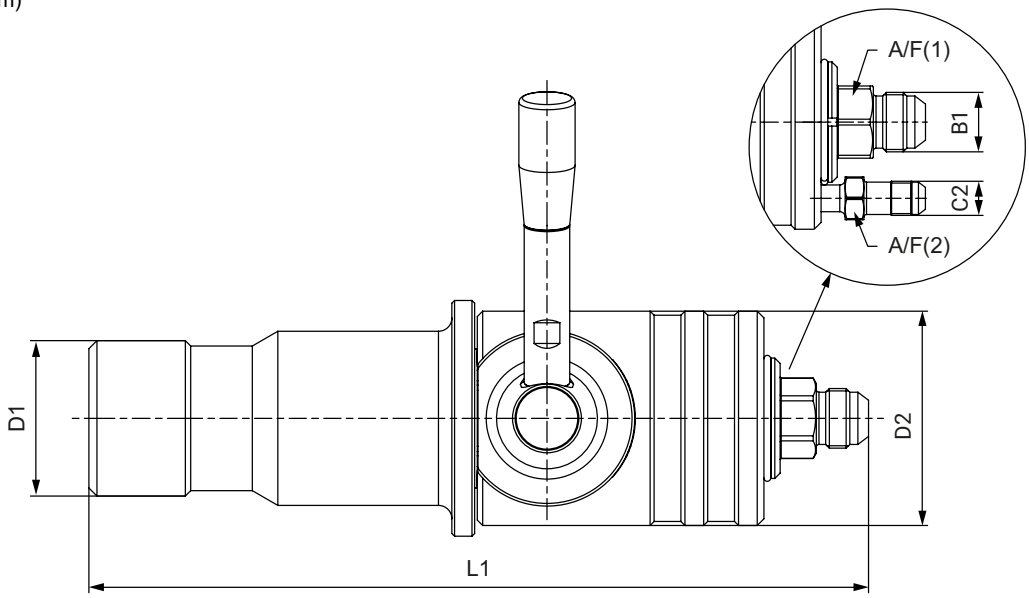

Part No.	Description	Pressure (MAWP)	B1 (male thread)	C2 (male thread)	L1	D1	D2	A/F (1)	A/F (2)
C1-62527-X1-X01	TK25 H₂	45 MPa	UNF 7/8“-14*	UNF 9/16“-18*	305	48	80	27	16

*acc. to SAE J514, 37° cone

Fueling assemblies consisting of fueling nozzle, hose set and breakaway coupling are available on request.

Accessories

The following accessories are available for the WEH® TK₂₅ H₂ Fueling nozzle:

Hose set

Hose set for connecting fueling nozzle and TSA5 H₂ breakaway coupling, complete with filling and venting hose, fittings and press-fittings supported by coil spring stubs. Not suitable for refueling with pre-cooled hydrogen acc. to SAE J2601.

Design filling/venting hose: max. operating pressure PS: 45 MPa / nominal bore for fitting: 5.6 mm (filling hose) resp. 4.5 mm (venting hose) / media temperature range: -20 °C up to +90 °C



Part No.	B1/B2 (female thread)	C1/C2 (female thread)	Hose length
C1-152556	UNF 7/8“-14*	UNF 9/16“-18*	3 m
C1-152557	UNF 7/8“-14*	UNF 9/16“-18*	4 m
C1-152558	UNF 7/8“-14*	UNF 9/16“-18*	5 m

* acc. to SAE JIC, 37° cone

Dispenser mounting

Mounting for safe attachment of the fueling nozzle to the dispenser.

Switch actuated dispenser mounting

approx. dimensions (mm)

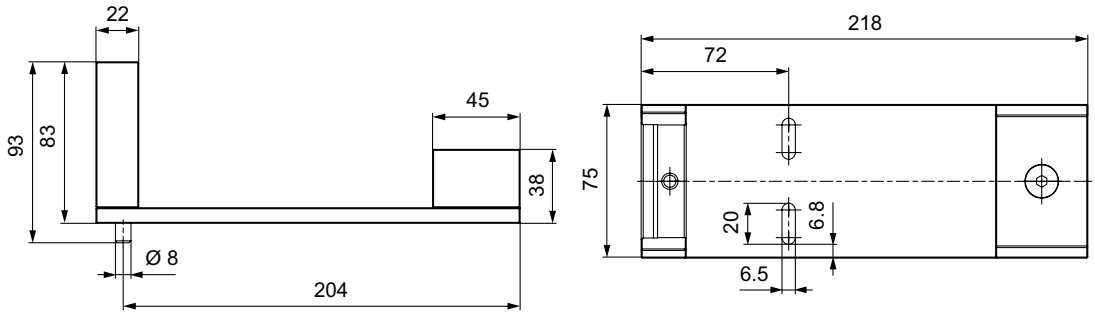

Switch actuated dispenser mounting with weather protection

approx. dimensions (mm)

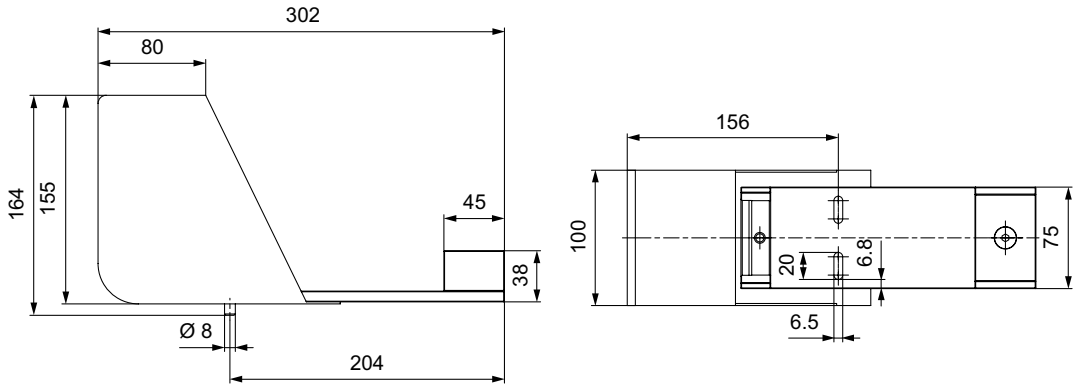



Part No.	Description
C1-83005	Dispenser mounting (switch actuated)
C1-82153	Dispenser mounting (switch actuated) and weather protection

WEH® TNS5 H₂ Service receptacle

To prevent damage in the fueling nozzle while leak testing during maintenance in the course of which pressure is applied, we recommend the use of a service receptacle. The receptacle also protects the fueling nozzle from dirt ingress whilst not in use.



Part no.	Description
C1-157347	TNS5 H₂ Service receptacle incl. protection cap

WEH® Breakaway couplings

For the suitable TSA5 H2breakaway coupling or TSA6 H₂ inline breakaway coupling, please see page 96 resp. 100.

Spare parts

Various parts are available as spares for the WEH® TK25 H_2 Fueling nozzle.



Position	Part No.	Description
1	W6631	Actuation lever
2	E80-397S401	Cover plate
	On request	Maintenance spray

Breakaway coupling

TSA5 H_2

Description

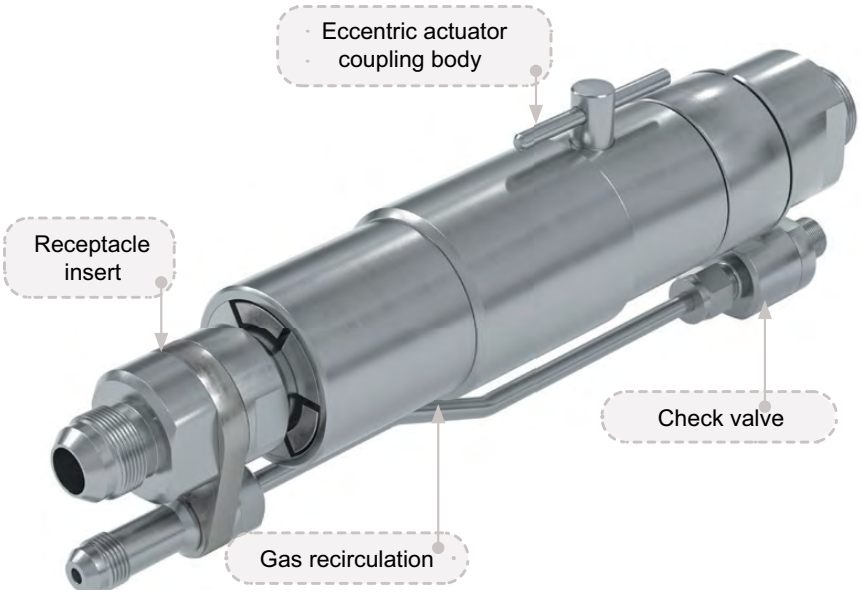

Features
- Reusable without factory servicing
- Installation at the dispenser
- Small compact design
- Integrated cleanable filter (40 µm)
- Check valve at venting line
- No additional tool necessary

The WEH® TSA5 H_2 Breakaway coupling provieds additional safety for your bus and truck fueling station. The breakaway is installed between the dispenser and the filling/venting hose.

In the event of unexpected tensile forces, e.g. a vehicle driving away with a connected fueling nozzle, the breakaway separates the connections between dispenser and hoses in a controlled manner while sealing both ends.
Damage to the vehicule‘s receptacle, the fueling nozzle and the dispenser can thus be prevented as far as possible.
The breakaway coupling can be reused after a functional test.

The integrated filter cleans the hydrogen from dirt ingress and can be cleaned easily and quickly during maintenance.

The WEH® Breakaway coupling consists of a coupling body, a receptacle insert and a gas recirculation with check valve.

On request we also offer fueling assemblies consisting of fueling nozzle, hose set and breakaway coupling.

Application
Breakaway coupling for bus and truck hydrogen fueling stations for direct installation at the dispenser.

Technical data

Characteristics	Basic version
Technical nominal size (TNW)	12 mm
Nominal Pressure	PN = 35 MPa
Max. allowable operating Pressure	MAWP = 45 MPa (PS = 450 bar)
Media temperature range	-20 °C up to +85 °C
Ambient temperature range	-40 °C up to +85 °C
Material	Corrosion resistant stainless steel, aluminum
Sealing material	Hydrogen resistant
Breakaway force	222 - 667 N
Design	With gas recirculation and filter (40 µm)

Other designs on request

Ordering - WEH® TSA5 H_2 Breakaway coupling for TK25 H_2

approx. dimensions (mm)

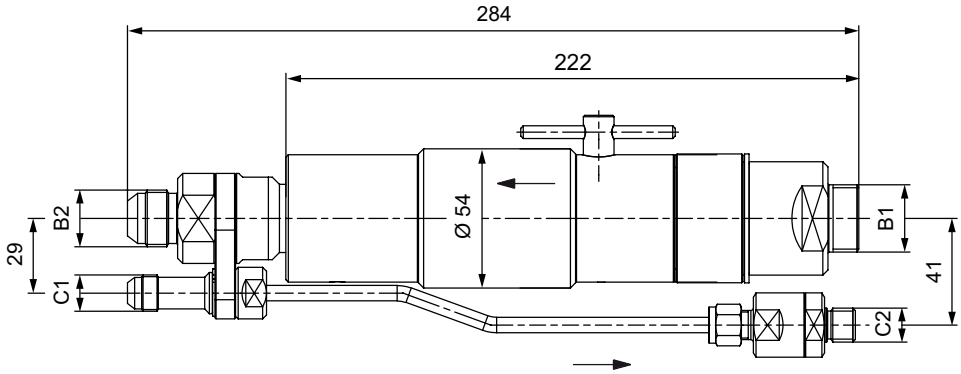



Part No.	Description	TNW	Pressure (MAWP)	B1 (male thread)	B2 (male thread)	C1 (male thread)	C2 (male thread)
C1-17941-X7-X01	TSA5 H_2 with filter (40 µm)	12mm	45 MPa	G3/4“*	UNF 7/8“-14*	UNF 9/16“-18**	G1/4“*

*acc. to DIN EN ISO 228-1
**acc. to SAE J514, 37° cone

Accessories

The following accessories are available for the WEH® TSA₅ H₂ Breakaway coupling:

Dispenser mounting

The breakaway coupling can also be used with a dispenser mounting. The mounting is firmly attached to the dispenser. The integrated guide tube provides a straight pull-off force.

approx. dimensions (mm)

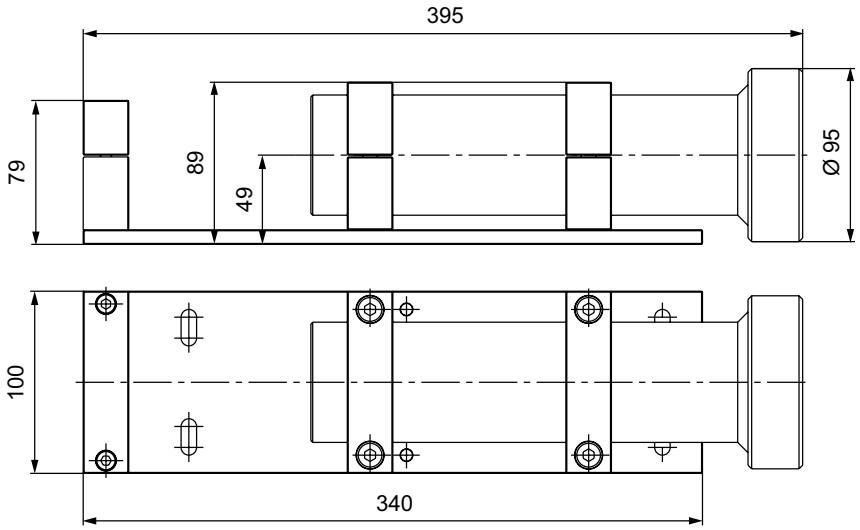

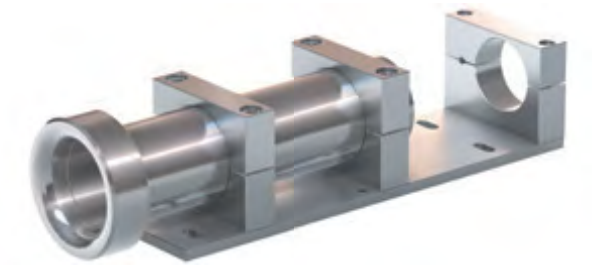

Part No.	Description
C1-82110	Dispenser mounting for TSA₅ H₂

Hoses

Suitable hoses for the TSA5 H₂ breakaway coupling are available on request.

Spare parts

Various parts are available as spares for the WEH® TSA5 H_2 Breakaway coupling.

Part No.	Description
W83706	Receptacle insert for TSA_5 H_2
B200B-119726	Spare seals set for receptacle insert W83706
W139034	Spare parts set consisting of a gas recirculation tube (length: approx. 195 mm) and a firmly mounted check valve
W9062	Wire filter insert 40 µm

Inline breakaway coupling

TSA6 H_2

Description

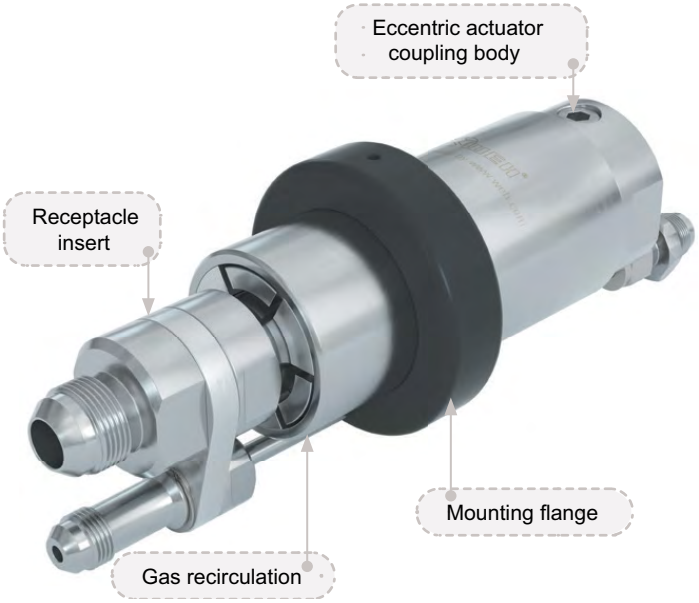

Fetures
- Reusable without factory servicing
- Installation between the filling and venting hoses
- Small compact design
- Mounting flange
- Eccentric actuation via Allen wrench

With the WEH® TSA6 H_2 Breakaway coupling, an inline breakaway coupling is also available for bus and truck refueling stations which is installed between the filling and venting hoses.

In the event of unexpected tensile forces, e.g. a vehicle driving away with a connected fueling nozzle, the breakaway separates the connections between dispenser and hoses in a controlled manner while sealing both ends.
Damage to the vehicule‘s receptacle, the fueling nozzle and the dispenser can thus be prevented as far as possible.
The breakaway coupling can be reused after a functional test.

The WEH® Breakaway coupling consists of a coupling body, a receptacle insert and a gas recirculation.

On request we also offer fueling assemblies consisting of fueling nozzle, hose set and inline breakaway coupling.

Application
Inline breakaway coupling for bus and truck hydrogen fueling stations for installation between the filling and venting hoses.

Technical data

Characteristics	Basic version
Technical nominal size (TNW)	12 mm
Nominal Pressure	PN = 35 MPa
Max. allowable operating Pressure	MAWP = 45 MPa (PS = 450 bar)
Media temperature range	-20 °C up to +85 °C
Ambient temperature range	-40 °C up to +85 °C
Material	Corrosion resistant stainless steel, aluminum
Sealing material	Hydrogen resistant
Breakaway force	222 - 667 N
Design	With gas recirculation

Other designs on request

Ordering - WEH® TSA6 H₂ Inline breakaway coupling for TK25 H₂

approx. dimensions (mm)

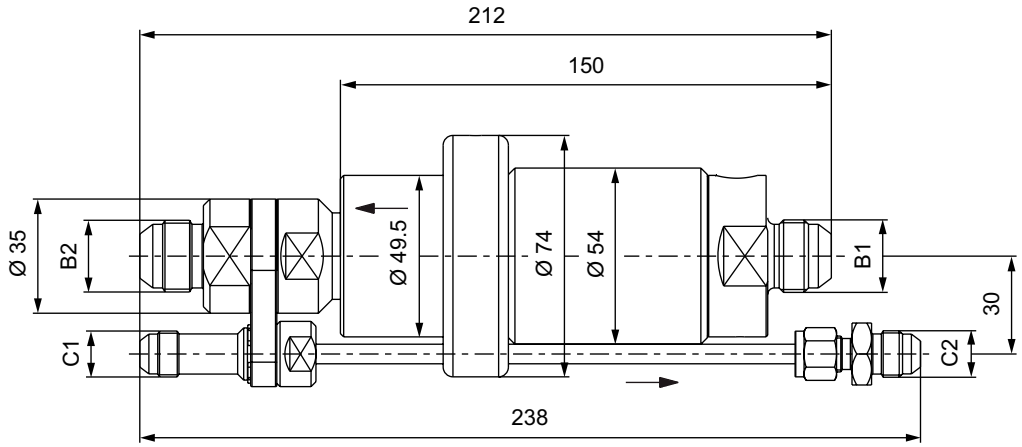



Part No.	Description	TNW	Pressure (MAWP)	B1/B2 (male thread)	C1/C2 (male thread)
C1-82323-X01	TSA6 H₂	12mm	45 MPa	UNF 7/8“-14*	UNF 9/16“-18*

*acc. to SAE J514, 37° cone

Accessories

The following accessories are available for the WEH® TSA₆ H₂ Inline breakaway coupling:

Hoses

Suitable hoses for the TSA6 H₂ inline breakaway coupling are available on request.

Spare parts

Various parts are available as spares for the WEH® TSA6 H₂ Inline breakaway coupling.

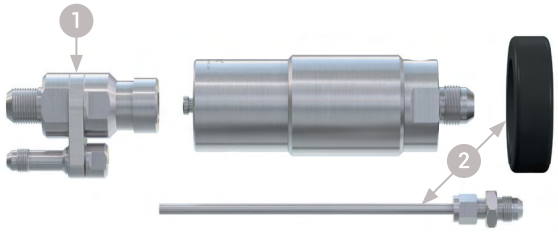

Position	Part No.	Description
1	W83706	Receptacle insert for TSA₆ H₂
1	B200B-119726	Spare seals set for receptacle insert W83706
2	W139031	Spare parts set consisting of a mounting flange, a gas recirculation tube and a firmly mounted fitting

Description



Features
- High flow rate of up to 90 g/s for fast refueling
- 10-µm metal wire mesh filter, customizable
- Based on TN9-S1 H2 70 MPa which is certified according to ISO 17268:2020
- Low-noise refueling thanks to optimized inner shape
- Seal-friendly design: Robust, durable and easy to maintain
- Coding for pressure range / gas type (acc. to table below)

new

The WEH® TN9-S2 H_2 35 MPa receptacle was specially developed for refueling road vehicles with hydrogen in the 350 bar pressure range.

The aerodynamically optimized inner shape of the receptacle ensures a virtually silent filling process and guarantees a maximum flow rate of up to 90 g/s. The seal-friendly design effectively protects internal seals from damage and ensures a long service life.

Thanks to its robustness and minimal maintenance requirements, the TN9-S2 H_2 35 MPa is particularly reliable and helps to reduce downtimes. It is also equipped with an integrated check valve and complies with the ISO 17268:2020 certified H70 version.

More safety thanks to integrated self-cleaning particle filter
The integrated filter cartridge with a pore size of 10µm, custom-made for the TN9, offers reliable protection against dirt particles and impurities. Its multi-layer wire mesh enables outstanding filter performance by effectively removing even long fibers and the smallest particles.This filter not only prevents leaks at the receptacle, but also ensures that operation remains safe and reliable even under difficult environmental conditions. The filter can also be flexibly adapted to different degrees of purity to meet your specific requirements.

TK H_2 (Except Tk25 H_2)

TN9-S2 H_2 35 MPa	25 MPa	35 MPa	35 MPa MF*	35 MPa HF**	70 MPa
35 MPa	✓	✓			

*MF = Medium-Flow acc. to ISO 17268-1:2025
**HF = High-Flow acc. to ISO 17268:2012

Application
Receptacle for hydrogen refueling / filling of road vehicles and for industrial applications suitable for WEH® fueling nozzles according to the table above.

Technical data

Characteristics	Basic version
Nominal pressure	PN = 35 MPa
Max. allowable operating pressure	MOP = 43.75 MPa (PS = 437.5 bar)
Temperature range	−40 °C up to +85 °C
Material	Corrosion resistant
Sealing material	Hydrogen resistant
Design	With protection cap, integrated particle filter and integrated check valve
Coding	H35 Grade D gemäß ISO 17268-1:2025
Conformity / Tests / Approvals	TN9-S2 H235 MPa is based on TN9-S1 H_2 70 MPa which is certified according to ISO 17268:2020.

Other designs on request

Ordering - WEH® TN9-S2 H_2 35 MPa Receptacle with double ferrule fitting

approx. dimensions (mm)

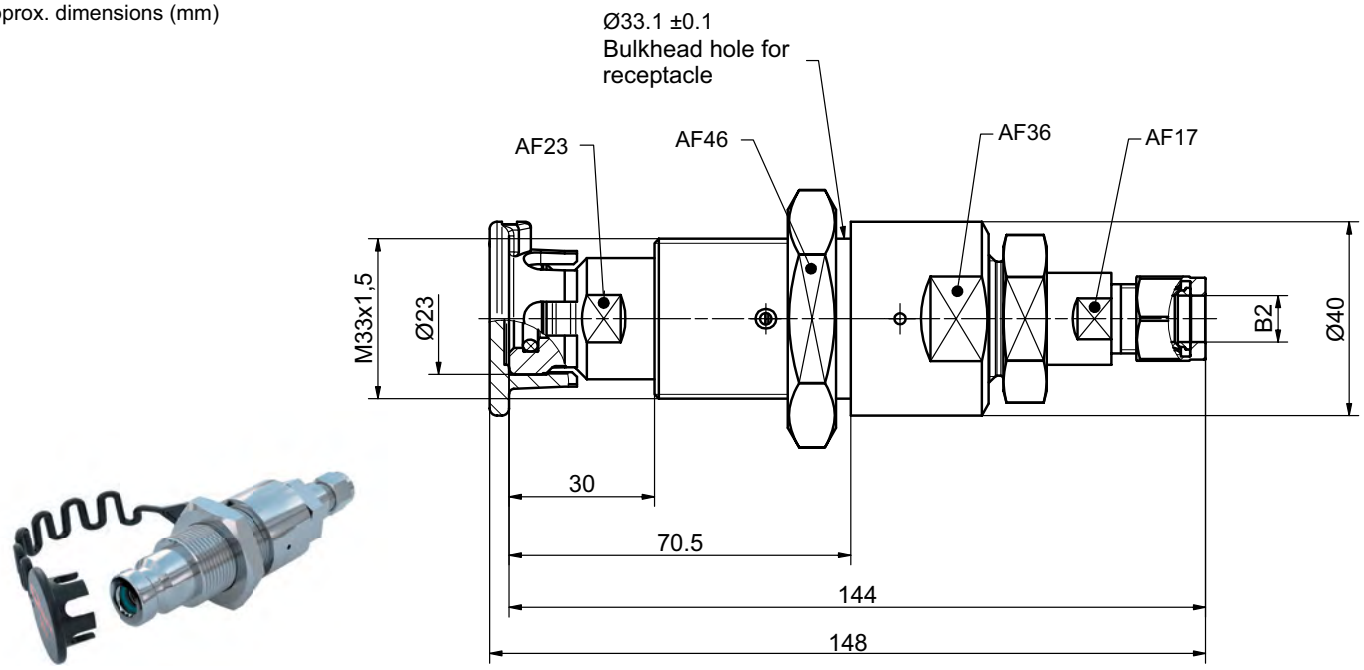

Part No.	Description	Mesh size filtero	Pressure (MOP)	B2
C1-189885	TN9-S2 H_2 35 MPa	10 µm	43.75 MPa	Tube Ø3/8"*

* double ferrule fitting

Accessories

The following accessories are available for the WEH® TN9-S2 H_2 35 MPa Receptacle:

Infrared data interface incl. holder for TN9

Application example:



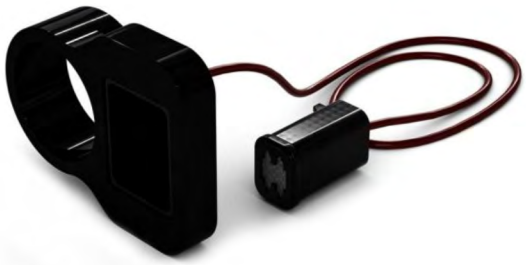

Part No.	Description
C1-188500	Infrared data interface incl. holder for TN9 (Input signal RS485, output signal J2799 Infrared)
C1-188941	Mounting nut (for IR interface)

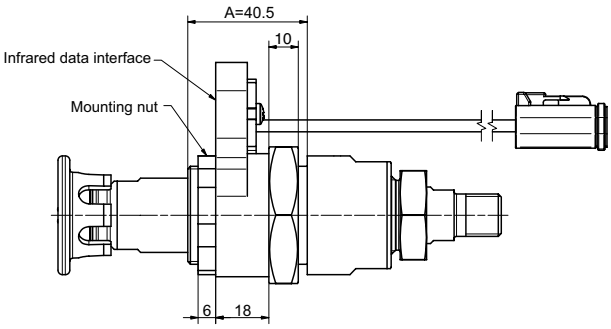

Note: The WEH® receptacle is designed to accommodate an attached data interface in area “A.”
When installing the WEH® receptacle, ensure that the permissible installation space A of 40.5 mm is not exceeded.

Take into account the sheet thickness, nut height, and data interface, including the mounting element.

When using data interface C1-188500 and mounting nut C1-188941, the sheet metal thickness must not exceed 6 mm.

Spare parts

Various parts are available as spares for the WEH® TN9-S2 H_2 35 MPa Receptacle.

Protection cap / Nut

Protection cap with a strap to protect the receptacle from dirt ingress.



Part No.	Description
W85984	Protection cap for receptacles
C1-185122	TN9 Nut M33x1.5 for receptacle mounting

Receptacle

TN9-S3- H_2 35 MPa

Description



Features
- **High flow rate of up to 120 g/s** for fast refueling
- **10-µm metal wire mesh filter**, customizable
- Based on TN9-S1 H_2 70 MPa which is certified according to ISO 17268:2020
- Low-noise refueling thanks to optimized inner shape
- Seal-friendly design: Robust, durable and easy to maintain
- Coding for pressure range / gas type (acc. to table below)

new

The WEH® TN9-S3 H_2 35 MPa Medium-Flow receptacle was specially developed for refueling road vehicles with hydrogen in the 350 bar pressure range.

The aerodynamically optimized inner shape of the receptacle ensures a virtually silent filling process and guarantees a maximum flow rate of up to 120 g/s. The seal-friendly design effectively protects internal seals from damage and ensures a long service life.

Thanks to its robustness and minimal maintenance requirements, the TN9-S3 H_2 35 MPa Medium-Flow is particularly reliable and helps to reduce downtimes. It is also equipped with an integrated check valve and complies with the ISO 17268:2020 certified H70 version.

More safety thanks to integrated self-cleaning particle filter
The integrated filter cartridge with a pore size of 10µm, custom-made for the TN9, of fers reliable protection against dirt particles and impurities. Its multi-layer wire mesh enables outstanding filter performance by effectively removing even long fibers and the smallest particles.This filter not only prevents leaks at the recep tacle, but also ensures that operation remains safe and reliable even under difficult environmental conditions. The filter can also be flexibly adapted to different degrees of purity to meet your specific requirements.

TK H_2 (Except Tk25 H_2)

TN9-S3 H_2 35 MPa Medium-Flow	25 MPa	35 MPa	35 MPa MF*	35 MPa HF**	70 MPa
35 MPa	✓	✓	✓	✓	

* MF = Medium-Flow acc. to ISO 17268-1:2025
** HF = High-Flow acc. to ISO 17268:2012

Application
Receptacle for hydrogen refueling / filling of road vehicles and for industrial applica tions suitable for WEH® fueling nozzles according to the table above.

Technical data

Characteristics	Basic version
Nominal pressure	PN = 35 MPa
Max. allowable operating pressure	MOP = 43.75 MPa (PS = 437.5 bar)
Temperature range	−40 °C up to +85 °C
Material	Corrosion resistant
Sealing material	Hydrogen resistant
Design	With protection cap, integrated particle filter and integrated check valve
Coding	H35 Grade D gemäß ISO 17268-1:2025
Conformity / Tests / Approvals	TN9-S3 H_2 35 MPa MF is based on TN9-S1 H_2 70 MPa which is certified according to ISO 17268:2020.

Other designs on request

Ordering - WEH® TN9-S3 $H_2$35 MPa Medium-Flow Receptacle with double ferrule fitting

approx. dimensions (mm)



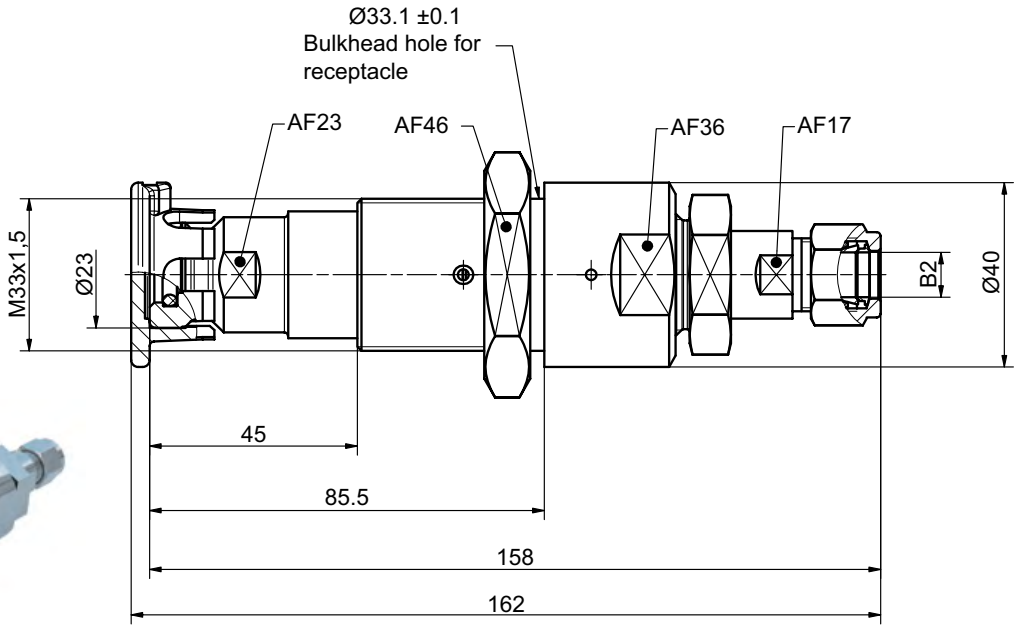

Part No.	Description	Mesh size filter	Pressure (MOP)	B2
C1-189887	TN9-S3 H_2 35 MPa Medium-Flow	10 µm	43.75 MPa	Tube Ø10mm*

* double ferrule fitting

Accessories

The following accessories are available for the WEH® TN9-S3 H_2 35 MPa Medium-Flow Receptacle:

Infrared data interface incl. holder for TN9

Application example:



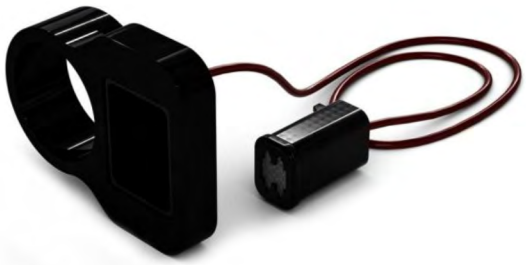

Part No.	Description
C1-188500	Infrared data interface incl. holder for TN9 (Input signal RS485, output signal J2799 Infrared)
C1-188941	Mounting nut (for IR interface)

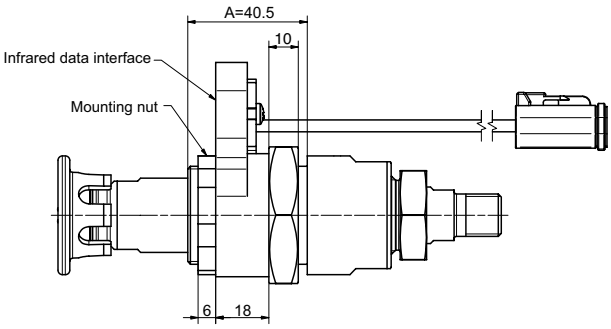

Note: The WEH® receptacle is designed to accommodate an attached data interface in area “A.”
When installing the WEH® receptacle, ensure that the permissible installation space A of 40.5 mm is not exceeded.

Take into account the sheet thickness, nut height, and data interface, including the mounting element.

When using data interface C1-188500 and mounting nut C1-188941, the sheet metal thickness must not exceed 6 mm.

Spare parts

Various parts are available as spares for the WEH® TN9-S3 H_2 35 MPa Medium-Flow Receptacle.

Protection cap / Nut

Protection cap with a strap to protect the receptacle from dirt ingress.



Part No.	Description
W85984	Protection cap for receptacles
C1-185122	TN9 Nut M33x1.5 for receptacle mounting

Description



Features
- Low-noise refueling
- Version with and without integrated self-cleaning particle filter (40 µm or 50 µm)
- Integrated high-flow check valve
- Sealing-friendly design
- Coding for pressure range / gas type (acc. to table below)

The WEH® TN1 H_2 Receptacle was specially designed for refueling cars with hydrogen.
Due to the aerodynamic design of the internal shapes of the receptacle, noise during refueling process is mostly eliminated, while at the same time maximum flow rate is enabled. The internal seals are arranged to largely prevent damage to the sealing components. That is why the WEH® TN1 H_2 proves to be extremely robust and durable, minimizing downtimes due to low maintenance.
The receptacle is equipped with an integrated check valve and has a coding for pressure range / gas type.

Enhanced safety by integrated particle filter
The use of an integrated particle filter prevents the ingress of dirt particles from the outside and therefore leakage at the receptacle is almost eliminated.

Application
Receptacle for hydrogen refueling / filling of cars and fork-lift trucks or other industrial applications, to be used with WEH® Fueling nozzles acc. to opposite table.

TK H_2 (Except TK25 H_2)

TN1 H_2	25 MPa	35 MPa	35 MPa MF*	35 MPa HF**	70 MPa
25 MPa	✓				
35 MPa	✓	✓			

*MF = Medium-Flow acc. to ISO 17268-1:2025
**HF = HF = High-Flow acc. to ISO 17268:2012

Technical data

Characteristics	Basic version
Technical nominal size (TNW)	Depending on design
Nominal Pressure	PN = 25 MPa, 35 MPa
Max. allowable operating Pressure	PS = 35 MPa, 45 MPa
Temperature range	−40 °C a +85 °C
Material	Corrosion resistant
Sealing material	Hydrogen resistant
Coding	Depending on design
Design	With protection cap, with integrated particle filter (40 µm or 50 µm), integrated check valve and fittings (only for receptacles with tube fitting)
Conformity / Tests / Approvals	e1 00 0008 (Regulation (EC) No. 79/2009) Leak tests acc. to SAE J2600:2002 GB/T 26779-2021 (only applies to EC79 articles)

Other designs on request

Ordering - WEH® TN1 H₂ Receptacle with tube fitting and filter (50 µm)

approx. dimensions (mm)



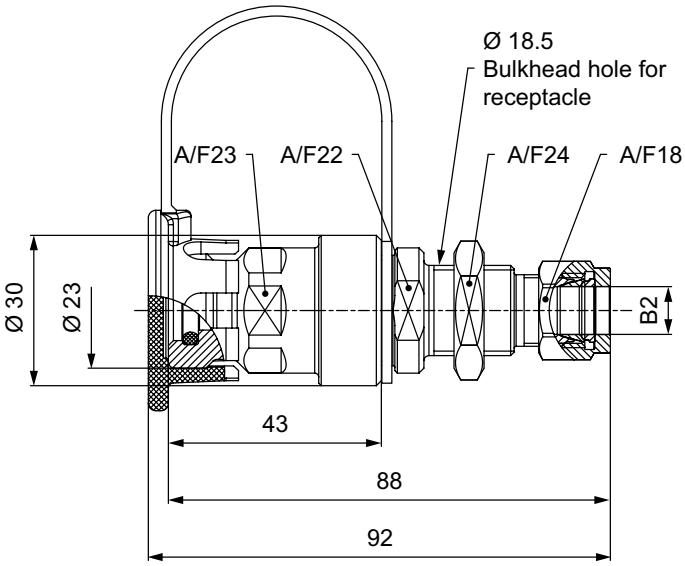

Part No.	Description	Coding	TNW	Pressure (MAWP)	B2
C1-31315-X1-X01	TN1 H₂	H25 acc. to ISO 17268:2012	8 mm	PS = 35 MPa	Tube Ø 3/8“*
C1-31316-X1	TN1 H₂ (EC79)	H35 Grade D acc. to 17268-1:2025	8 mm	MAWP = 45 MPa	Tube Ø 3/8“*
C1-70661-X01	TN1 H₂	H25 acc. to ISO 17268:2012	8 mm	PS = 35 MPa	Tube Ø 10*
C1-35426-X2	TN1 H₂ (EC79)	H35 Grade D acc. to 17268-1:2025	8 mm	MAWP = 45 MPa	Tube Ø 10*

* double ferrule fitting

Ordering - WEH® TN1 H_2 Receptacle prepared for data interface, with filter (40 µm)

approx. dimensions (mm)

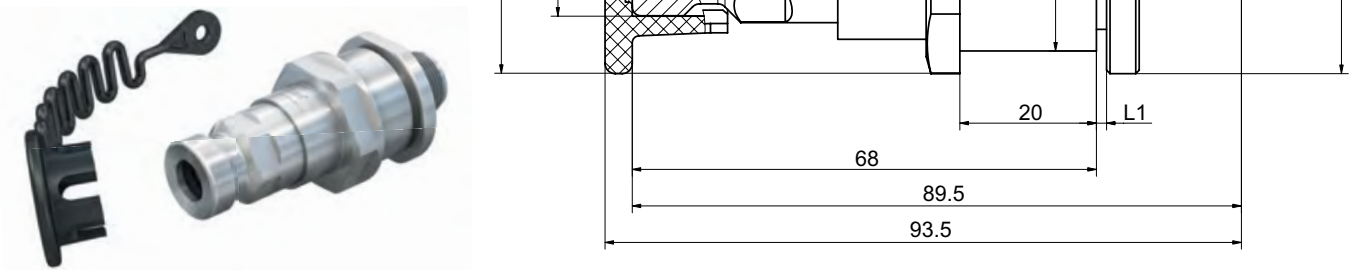

Part No.	Description	Coding	TNW	Pressure (MAWP)	L1	B2 (male thread)
C1-35426-X2	TN1 H_2 (EC79)	H35 Grade D acc. to 17268-1:2025	6 mm	45 MPa	1.5**	UN 11/16“-16 for sealing with O-Lok® Face Seal* or tube Ø 10 (3/8“)

* Face Seal acc. to SAE J1453
** Please indicate when ordering if thicker sheet metals are needed!
Data interface not included!

Other connection sizes and types (e.g. Cone and Thread Fittings or VOSSLok⁴⁰) on request.

Spare parts

Various parts are available as spares for the WEH® TN1 H_2 Receptacle.

Protection cap

Protection cap with a strap to protect the receptacle from dirt ingress.



Part No.	Description
W87803	Protection cap
W85984	Protection cap for receptacles prepared for data interface

Description



Features
- Low-noise refueling
- Integrated self-cleaning particle filter (40 µm)
- Integrated high-flow check valve
- Sealing-friendly design
- Coding for pressure range / gas type (acc. to table below)

The WEH® TN1 H_2 High-Flow Receptacle was developed to fit the WEH® TK16 H2 High-Flow Fueling nozzle. This enables buses and trucks to be refueled from now on at car fueling stations.
Refueling is done either with a TK16 H_2 or with a TK16 H2
High-Flow fueling nozzle with increased flow rate. Due to the aerodynamic design of the internal shapes of the receptacle, noise during refueling process is mostly eliminated, while at the same time maximum flow rate is enabled. The internal seals are arranged to largely prevent damage to the sealing components. That is why the WEH® TN1 H_2 High-Flow proves to be extremely robust and durable, minimizing downtimes due to low maintenance.
The receptacle is equipped with an integrated check valve and has a coding for pressure range / gas type.

Enhanced safety by integrated particle filter
The use of an integrated particle filter prevents the ingress of dirt particles from the outside and therefore leakage at the receptacle is almost eliminated.

Application
Receptacle for hydrogen refueling / filling of buses, trucks and fork-lift trucks or other industrial applications, to be used with WEH® Fueling nozzles acc. to opposite table.

TK17 H_2 / TK16 H_2

TN1 H_2 HF*	25 MPa	35 MPa	35 MPa MF*	35 MPa HF*	70 MPa
35 MPa	✓	✓	✓	✓	

*MF = Medium-Flow acc. to ISO 17268-1:2025
**HF = High-Flow acc. to ISO 17268:2012
This coding table applies exclusively to the variants listed below (other variants on request).

Technical data

Characteristics	Basic version
Technical nominal size (TNW)	Depending on design
Nominal Pressure	PN = 35 MPa
Max. allowable operating Pressure	PS (MAWP) = 43.75 MPa
Temperature range	−40 °C up to +85 °C
Material	Corrosion resistant
Sealing material	Hydrogen resistant
Coding	Depending on design
Design	With protection cap, integrated particle filter (40 µm), integrated check valve and fittings (only for receptacles with tube fitting)
Conformity / Tests / Approvals	e1 00 0003 (Regulation (CE) nº 79/2009);

Other designs on request

Ordering - WEH® TN1 H_2 High-Flow Receptacle with tube fitting

approx. dimensions (mm))



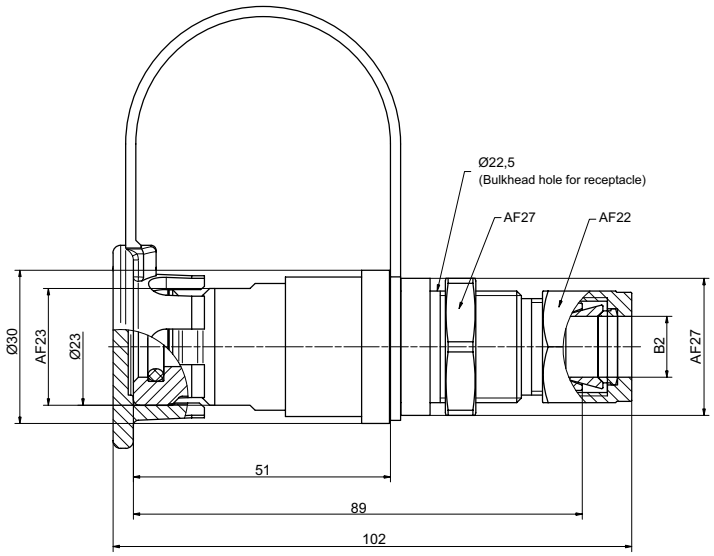

Part No.	Description	Coding	TNW	Pressure (MAWP)	B2
C1-187355	TN1H_2 HighFlow (EC79)	H35Mf Grade D acc. to ISO 17268-1:2025	8mm	43.75 MPa	Tube Ø12*

* double ferrule fitting

Ordering - WEH® TN1 H_2 High-Flow Receptacle with male thread, prepared for data interface

approx. dimensions (mm)



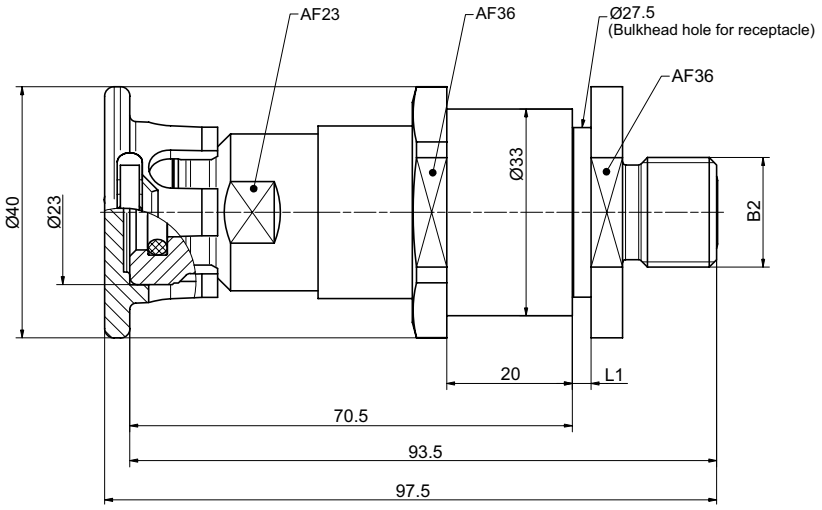

Part No.	Description	Coding	TNW	Pressure (MAWP)	L1	B2 (male thread)
C1-187534	TN1 H_2 High Flow (EC79)	H35MF Grade D acc. to ISO 17268-1:2025	6mm	43.75 MPa	2,5**	UN 11/16"-16 for sealing with O-Lok® Face Seal* for tube Ø 10 (3/8“)

* Face Seal acc. to SAE J1453
** Please indicate when ordering if thicker sheet metals are needed!
Data interface not included!

Ordering - WEH® TN1 H_2 High-Flow Receptacle with male thread, prepared for data interface

approx. dimensions (mm)



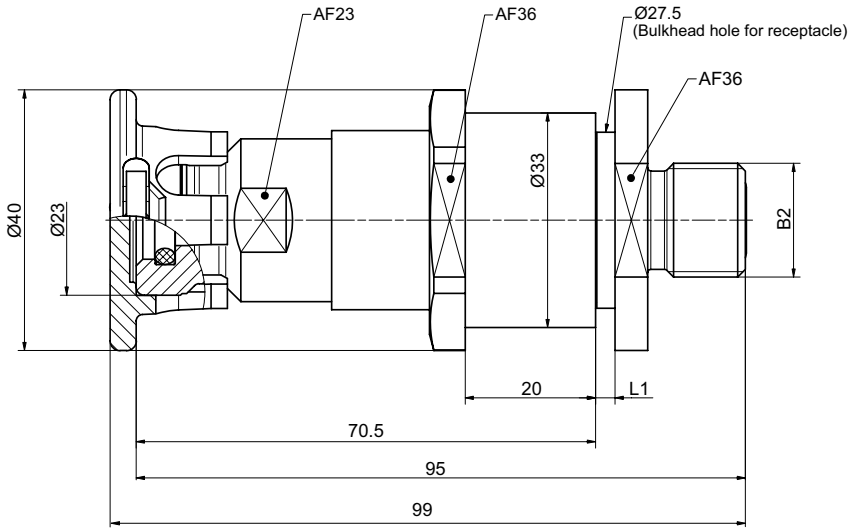

Part No.	Description	Coding	TNW	Pressure (MAWP)	L1	B2 (male thread)
C1-189047	TN1 H_2 High Flow (EC79)	H35MF Grade D acc. to ISO 17268-1:2025	8mm	43.75 MPa	2,5**	UN 13/16“-16 for sealing with O-Lok® Face Seal* for tube Ø 12.7 (1/2“)

* Face Seal acc. to SAE J1453
** Please indicate when ordering if thicker sheet metals are needed!
Data interface not included!

Ordering - WEH® TN1 H_2 High-Flow Receptacle with tube fitting, prepared for data interface

approx. dimensions (mm)



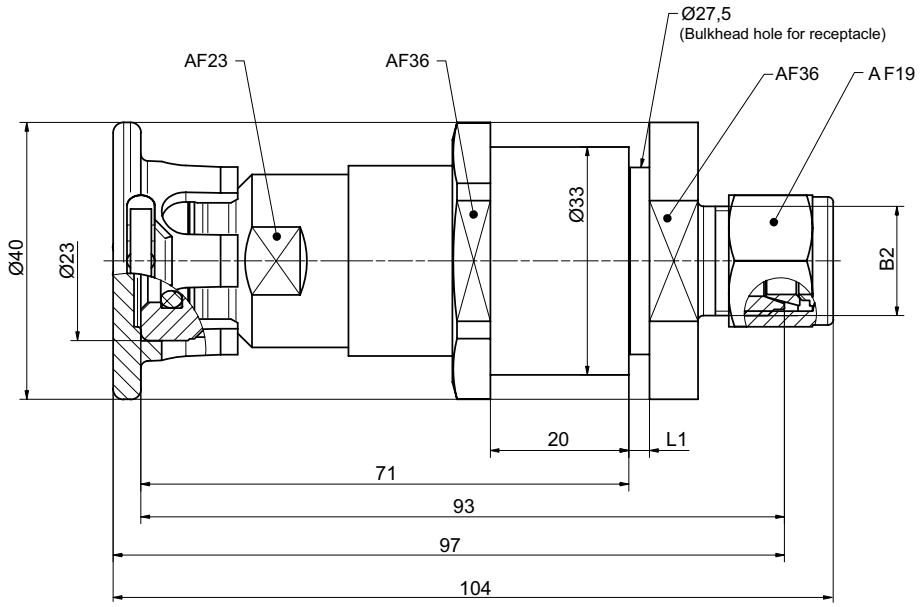

Part No.	Description	Coding	TNW	Pressure (MAWP)	L1	B2 (male thread)
C1-182091	TN1 H_2 High Flow (EC79)	H35Mf Grade D acc. to ISO 17268-1:2025	8mm	43.75 MPa	2,5**	Tube Ø10*

* Face Seal acc. to SAE J1453
** Please indicate when ordering if thicker sheet metals are needed!
Data interface not included!

Other connection sizes and types (e.g. Cone and Thread Fittings or VOSSLok[40]) on request.

Spare parts

Various parts are available as spares for the WEH® TN1 H_2 High-Flow Receptacle.

Protection cap

Protection cap with a strap to protect the receptacle from dirt ingress.



Part No.	Description
W87803	Protection cap
W85984	Protection cap for receptacles prepared for data interface

Receptacle TN5 H_2

Description



Features
- Low-noise refueling
- Integrated self-cleaning particle filter (50 µm)
- Integrated high-flow check valve
- Sealing-friendly design
- Coding for pressure range / gas type (acc. to table below)

The WEH® TN5 H_2 Receptacle was specially designed for refueling buses and trucks with hydrogen.
Due to the aerodynamic design of the internal shapes of the receptacle, noise during refueling process is mostly eliminated, while at the same time high flow rate is enabled. The internal seals are arranged to largely prevent damage to the sealing components. That is why the WEH® TN5 H_2 proves to be extremely robust and durable, minimizing downtimes due to low maintenance.
The receptacle is equipped with an integrated check valve and has a coding for pressure range / gas type.

Enhanced safety by integrated particle filter
The use of an integrated particle filter prevents the ingress of dirt particles from the outside and therefore leakage at the receptacle is almost eliminated.

Application
Receptacle for hydrogen refueling / filling of buses, trucks and fork-lift trucks or other industrial applications, to be used with WEH® TK25 H_2 Fueling nozzle.

	TK25 H_2	
TN5 H_2	25 MPa	35 MPa
35 MPa	✓	✓

Technical data

Characteristics	Basic version
Technical nominal size (TNW)	Depending on design
Nominal Pressure	PN = 35 MPa
Max. allowable operating Pressure	PS (MAWP) = 45 MPa
Temperature range	−40 °C up to +85 °C
Material	Corrosion resistant
Sealing material	Hydrogen resistant
Design	With protection cap, integrated particle filter (50 µm), integrated check valve and fittings
Conformity / Tests / Approvals	GB/T 26779-2021

Other designs on request

Ordering - WEH® TN5 H₂ Receptacle with tube fitting

approx. dimensions (mm)



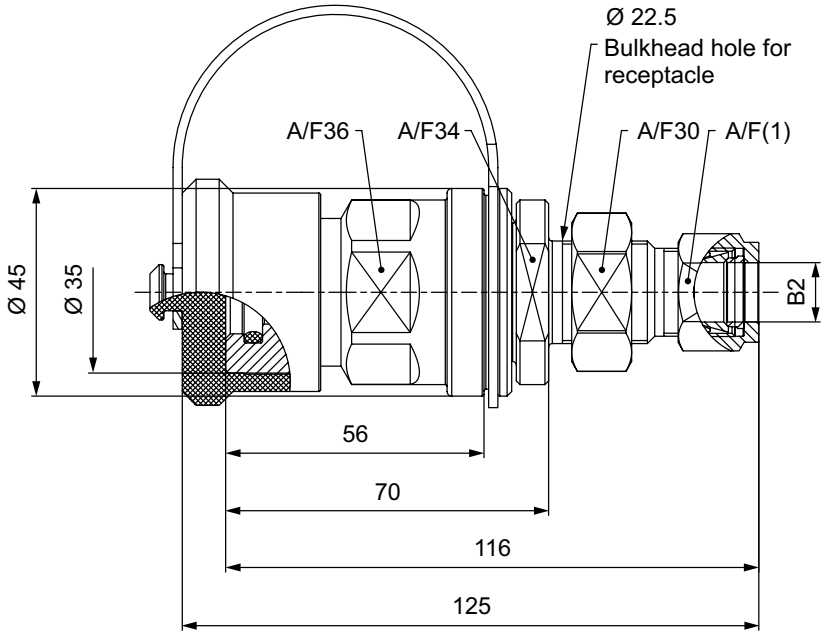

Part No.	Description	TNW	Pressure (MAWP)	B2	A/F (1)
C1-49772-X1-X01	TN5 H₂	10,5 mm	45 MPa	Tube Ø 12*	22
C1-174547	TN5 H₂	10,5 mm	45 MPa	Tube Ø 1/2"*	22
C1-19136-X1-X01	TN5 H₂	12 mm	45 MPa	Tube Ø 16*	25

* double ferrule fitting

Other connection sizes and types (e.g. Cone and Thread Fittings or VOSSLok⁴⁰) on request.

Spare parts

Various parts are available as spares for the WEH® TN5 H₂ Receptacle.

Protection cap

Protection cap with a strap to protect the receptacle from dirt ingress.



Part No.	Description
E80-134306	Protection cap

Check valve

TVR1 H_2

Descripton



Features
- Robust construction
- Low-noise opening and closing
- Corrosion resistant stainless steel
- High leak tightness

With the TVR1 H_2 WEH offers a high-performance check valve for use with gaseous hydrogen.
The WEH® TVR1 H_2 check valves provide a reliable function wherever hydrogen should only flow in one direction within a pipe system and must be prevented from a return flow.

The seals in the valve are arranged to prevent them from being damaged by dirt particles in the gas flow. The WEH® TVR1 H_2 Check valve is made of corrosion-resistant stainless steel achieving a very durable unit due to its robust internal structure.

Application
Check valve for cars, also suitable for installation in hydrogen fueling stations.
The WEH® TVR1 H_2 product family is offered as a return flow prevention acc. to DIN EN 736-1 for installation in H_2 systems and pipelines.

Technical data

Characteristics	Basic version
Technical nominal size (TNW)	8 mm
Nominal Pressure	PN = 35 MPa
Max. allowable operating Pressure	PS (MAWP) = 45 MPa
Temperature range	−40 °C up to +85 °C
Material	Corrosion resistant stainless steel (inner components partially made of brass: C1-18485/4)
Sealing material	Hydrogen resistant
Design	Incl. fittings (only for check valves with tube fitting) With integrated particle filter on request
Conformity / Tests / Approvals	e1 00 0005 (Regulation (EC) No. 79/2009)

Other designs on request

Ordering- WEH® TVR1 H₂ Check valve with tube fitting on both sides

approx. dimensions (mm)



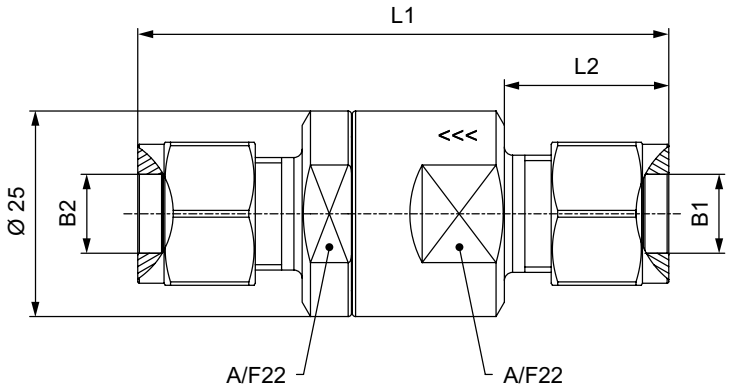

Part No.	Description	TNW	Pressure (MAWP)	B1	B2	L1	L2
On request	TVR1 H₂ (EC79)	8 mm	45 MPa	Tube Ø 3/8"*	Tube Ø 3/8"*	65	20
On request	TVR1 H₂ (EC79)	8 mm	45 MPa	Tube Ø 10*	Tube Ø 10*	65	20

* double ferrule fitting

Other connection sizes and types (e.g. Cone and Thread Fittings or VOSSLok[40]) on request.

Check valve

TVR5 H_2

Description



Features
- Robust construction
- Low-noise opening and closing
- Corrosion resistant stainless steel
- High leak tightness

With the TVR5 H_2 WEH offers a high-performance check valve especially for hydrogen buses and trucks.
The WEH® TVR5 H_2 check valves provide a reliable function wherever hydrogen should only flow in one direction within a pipe system and must be prevented from a return flow.

The seals in the valve are arranged to prevent them from being damaged by dirt particles in the gas flow. The WEH® TVR5 H_2 Check valve is made of corrosion-resistant stainless steel achieving a very durable unit due to its robust internal structure.

Application
Check valve for buses and trucks, also suitable for installation in hydrogen fueling stations.The WEH® TVR5 H_2 product family is offered as a return flow prevention acc. to DIN EN 736-1 for installation in H2 systems and pipelines.

Technical data

Characteristics	Basic version
Technical nominal size (TNW)	Depending on design
Nominal Pressure	PN = 35 MPa
Max. allowable operating Pressure	MAWP = 45 MPa (PS = 450 bar)
Temperature range	−40 °C up to +85 °C
Material	Corrosion resistant stainless steel
Sealing material	Hydrogen resistant
Design	Incl. fittings (only for check valves with tube fitting)
Conformity / Tests / Approvals	On request

Other designs on request

Ordering - WEH® TVR5 H₂ Check valve with tube fitting on both sides

approx. dimensions (mm)



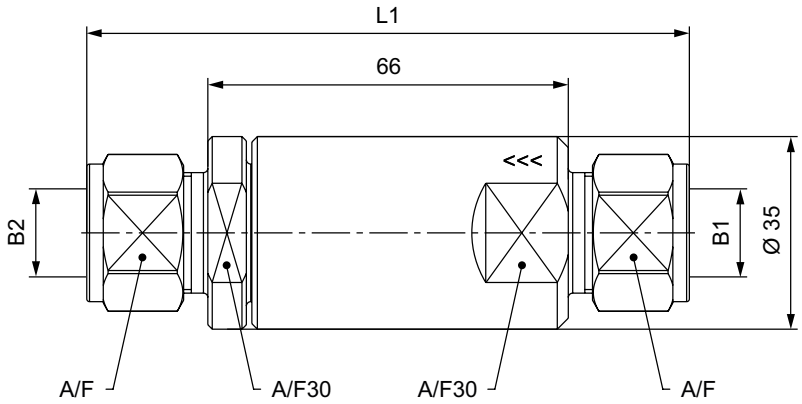

Part No.	Description	TNW	Pressure (PS)	B1	B2	L1	A/F
C1-30216-X1-X01	TVR5 H₂	10,5 mm	45 MPa	Tube Ø 12*	Tube Ø 12*	110	20
C1-30215-X1-X01	TVR5 H₂	14 mm	45 MPa	Tube Ø 16*	Tube Ø 16*	111	25

* double ferrule fitting

Other connection sizes and types (e.g. Cone and Thread Fittings or VOSSLok[40]) on request.

Description



Features
- For clean filtered hydrogen
- Filter insert can be cleaned
- For installation onboard H_2 vehicles and in H_2 fueling stations
- Also suitable as prefilter for inline breakaway couplings

When refueling hydrogen, it can often happen that hydrogen with dirt particles is fueled. These contaminated particles in the gas may cause damage to the sealing components. WEH therefore offers the WEH® TSF2 Filter for clean filtered hydrogen. Solid particles are reliably captured.
The filter element can be removed and can be reused after cleaning.

The WEH® TSF2 H_2 Filter is mainly used in fueling stations and plants.
To meet the different requirements of dispenser manufacturers, a wide variety of connection configurations are available - tube fitting / female thread on both ends or female and male thread.

For use as a prefilter with WEH® TSA2 H_2 Inline breakaway coupling, WEH offers a special design with male and female thread.

Application
Filter for installation in hydrogen vehicles and fueling stations.

Technical data

Characteristics	Basic version
Technical nominal size (TNW)	Depending on design
Nominal pressure	PN = 35 MPa
Max. allowable operating pressure	MAWP = 45 MPa (PS = 450 bar)
Temperature range	−40 °C up to +85 °C
Material	Corrosion resistant stainless steel
Sealing material	Hydrogen resistant
Filter element	40 µm or 20 µm
Design	Incl. fittings (only for filters with tube fitting)
Conformity / Tests / Approvals	On request

Other designs on request

Ordering - WEH® TSF2 H₂ Filter with tube fitting on both sides

approx. dimensions (mm)



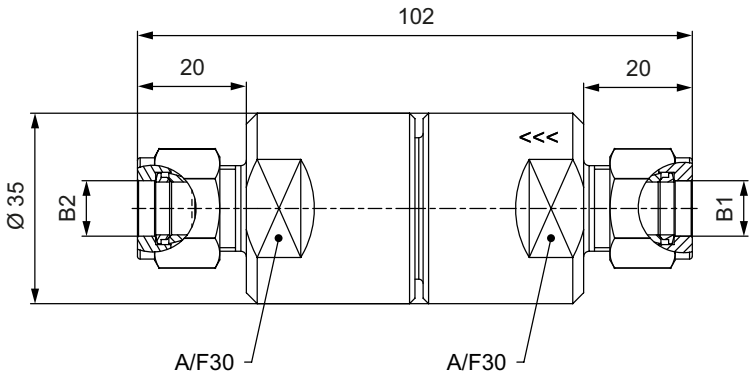

Part No.	Description	Filter (µm)	TNW	Pressure (MAWP)	B1	B2
C1-18487-X01	TSF2 H₂	40	8 mm	45 MPa	Tube Ø 3/8"*	Tube Ø 3/8"*
C1-36033-X01	TSF2 H₂	40	8 mm	45 MPa	Tube Ø 10*	Tube Ø 10*

* double ferrule fitting

Ordering - WEH® TSF2 H₂ Filter with female thread on both sides

approx. dimensions (mm)



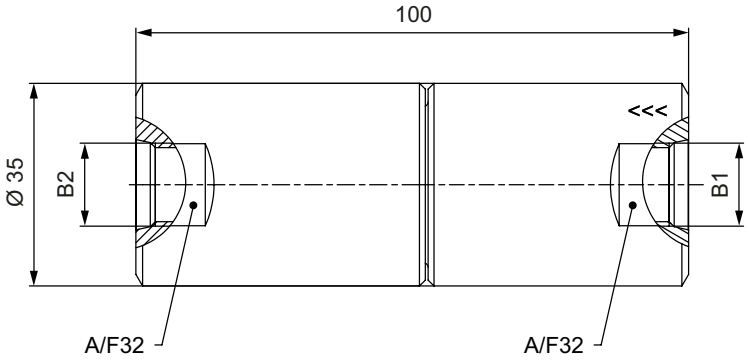

Part No.	Description	Filter (µm)	TNW	Pressure (MAWP)	B1 (female thread)	B2 (female thread)
C1-34576-X01	TSF2 H₂	40	8 mm	45 MPa	UNF 9/16"-18*	UNF 9/16"-18*

* acc. to SAE J1926-1

Ordering - WEH® TSF2 H_2 Filter with male and female thread (also suitable as prefilter for TSA2 H_2)

approx. dimensions (mm)



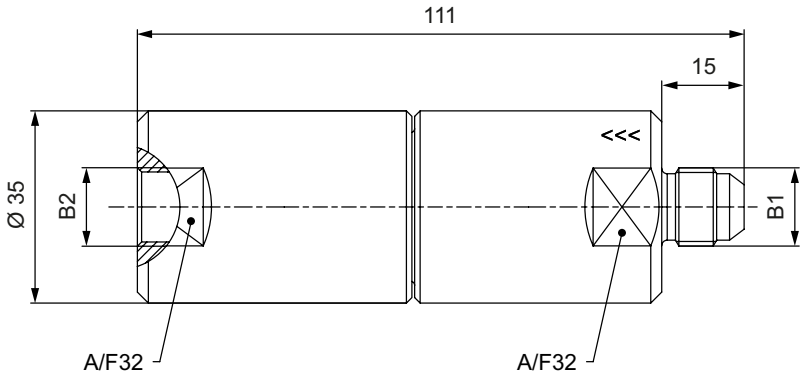

Part No.	Description	Filter (µm)	TNW	Pressure (MAWP)	B1 (male thread)	B2 (female thread)
C1-134710-X01	TSF_2 H_2	40	8 mm	45 MPa	UNF 9/16“-18*	UNF 9/16“-18*
C1-134711-X01	TSF_2 H_2	20	8 mm	45 MPa	UNF 9/16“-18*	UNF 9/16“-18*

* acc. to SAE J514, 37° cone

Other connection sizes and types (e.g. Cone and Thread Fittings or VOSSLok[40]) on request.

Spare parts

Various parts are available as spares for the WEH® TSF2 H_2 Filter.

Part No.	Description
E69-9061	Wire filter insert 40 µm (incl. spring and o-ring)
W67754	Wire filter insert 20 µm (incl. spring and o-ring)

Coalescing filter

TSF2 H_2

Description



Features
- Fine filter with high particle retention capacity (efficiency of approx. 99.9 % > 0.3 µm)
- Operating pressure (PS) up to 490 bar
- For installation in H2 vehicles and fueling stations
- Protection of critical components in the fuel system
- Wear resistant and corrosion resistant
- Ease of maintenance

new

When refueling with hydrogen, clean, filtered gases are a basic prerequisite for the proper functioning of the vehicle and fueling station components. The WEH® TSF2 H_2 coalescence filter cleans the gas flow of contaminants.

Coalescence filters are even more effective than normal particle filters due to their high particle retention capacity. more effective. The TSF2 H_2 filters the gas flow and reliably and safely removes the contaminants contained in the gas, such as oil, water aerosols and dirt particles. These impurities are separated by the coalescence filter. The hydrogen flows through the filter, whereby the slower-flowing components such as oil, water and other liquid aerosols form droplets, sink to the bottom of the filter and can be removed via the oil outlet.

The WEH® TSF2 H_2 is easy to maintain and can also be retrofitted in vehicles and fueling stations.

Application
Coalescence filters for installation in hydrogen vehicles and fueling stations.

Techincal data

Characteristics	Basic version
Technical nominal size (TNW)	8 mm
Nominal pressure	PN = 35 MPa
Max. allowable operating pressure	PS (MAWP) according to design
Temperature range	−40 °C a +85 °C
Material	Corrosion resistant
Sealing material	Hydrogen resistant
Filter element	< 0,3 µm
Design	Inclui plug
Conformity / Tests / Approvals	e1 00 0004 (Regulation (EC) No. 79/2009)

Other designs on reques

Ordering - Coalescing filter WEH® TSF2 H₂ with filter cartridge Ø 38 mm

approx. dimensions (mm)

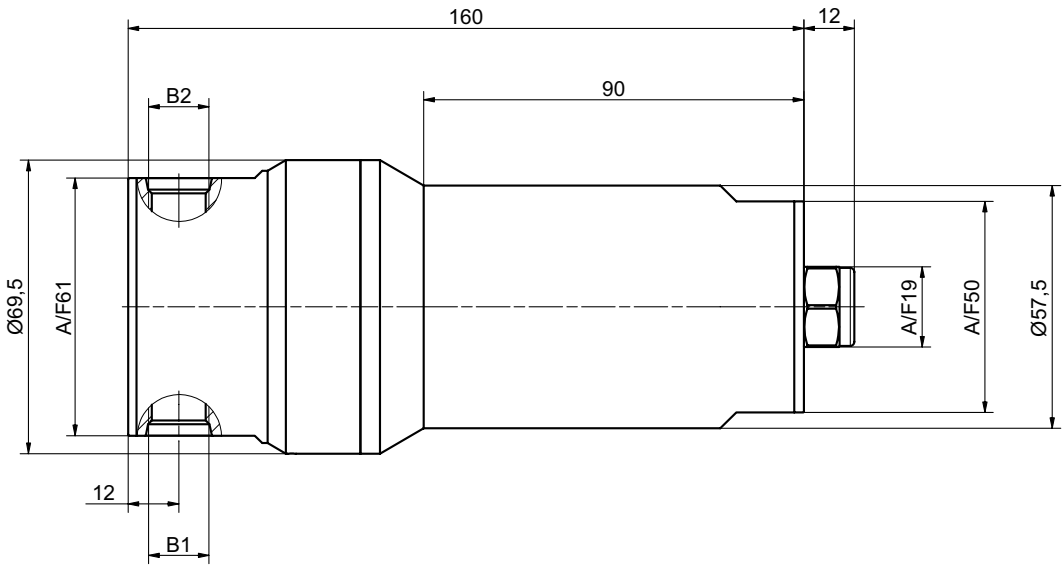

Part No.	Description	Pressure (MAWP)	B1 (female thread)	B2 (female thread)
C1-181946	TSF2 H₂ (EG₇₉)	43.75 MPa	UNF 9/16“-18*	UNF 9/16“-18*
C1-181949	TSF2 H₂	49 MPa	UNF 9/16“-18*	UNF 9/16“-18*

* according to SAE J1926-1

Other connections (e.g. Cone and Thread Fittings or VOSSLok[40]) on request.

Spare parts / Accessories

Various spare parts are available for the WEH® TSF2 H₂ coalescence filter.

Plug

Plug with matching O-ring (made of polyurethane) to close the oil outlet “Q” (filter end).



Part No.	Description	Connection (male thread)
E69-93336	Plug with O-Ring	UNF 9/16“-18*

Spare parts set
Suitable for coalescence filter TSF2 H₂

Part No.	Description
B200B-168192	Spare parts set consisting of filter cartridge Ø 38 mm, support ring and 2 O-rings

Screw-in fittings for connections B1/B2

Part No.	Description
E69-135408	Swagelok UNF 9/16*-18* AG RV Ø10mm
B200B-168192	Swagelok UNF 9/16*-18* AG RV Ø8mm

* according to SAE J1926-1 / Tightening torque 45 Nm + 10%

Description



Features
- For clean filtered hydrogen
- Filter insert can be cleaned
- For installation onboard H_2 vehicles and in H_2 fueling stations

When refueling hydrogen, it can often happen that hydrogen with dirt particles is fueled. These contaminated particles in the gas may cause damage to the sealing components. WEH therefore offers the WEH® TSF4 H_2 Filter for clean filtered hydrogen. Solid particles are reliably captured.
The filter element can be removed and can be reused after cleaning.

The particle filter is specially designed for installation in vehicles, but can also be installed in fueling stations and plants, depending on the application.

Application
Filter for installation in hydrogen vehicles and fueling stations.

Technical data

Characteristics	Basic version
Technical nominal size (TNW)	10 mm
Nominal pressure	PN = 35 MPa
Max. allowable operating pressure	According to design
Temperature range	−40 °C up to +85 °C
Material	Corrosion resistant stainless steel
Sealing material	Hydrogen resistant
Filter element	10 µm
Design	Incl. fittings (only for filters with tube fitting)
Conformity / Tests / Approvals	On request

Other designs on request

Ordering - WEH® TSF4 H₂ T-Filter with tube fitting on both sides

approx. dimensions (mm)



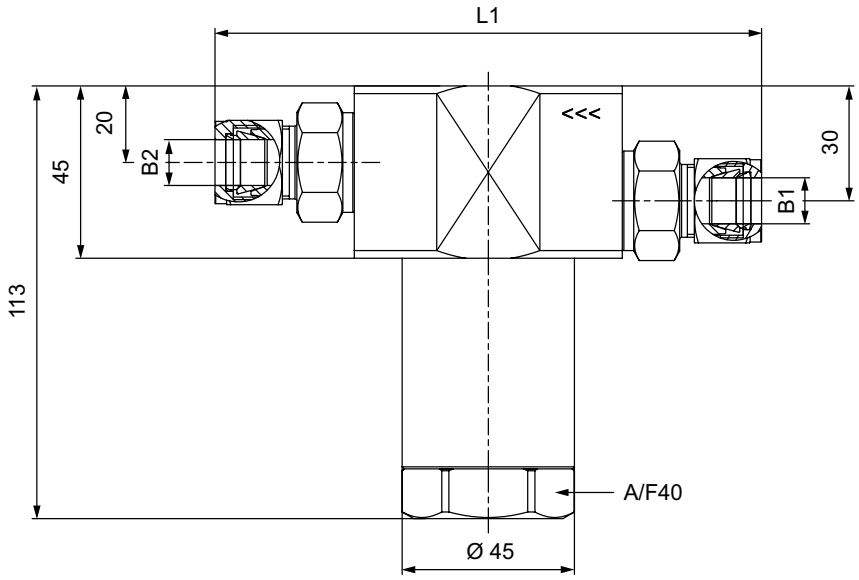

Part No.	Description	Filter (µm)	TNW	Pressure (MAWP)	B1	B2	L1
C1-58026-X01	TSF4 H₂	10	10 mm	45 MPa	Tube Ø 12*	Tube Ø 12*	145
C1-73987-X01	TSF4 H₂	10	10 mm	35 MPa	Tube Ø 1/2"*	Tube Ø 1/2"*	145

* double ferrule fitting

Other connection sizes and types (e.g. Cone and Thread Fittings or VOSSLok[40]) on request.

Spare parts

Various parts are available as spares for the WEH® TSF4 H₂ Filter.

Part No.	Description
W9063	Wire filter insert 10 µm
E51-47589	O-ring for filter insert (only T-filter)

Defueling nozzle

TK6 H_2

Description

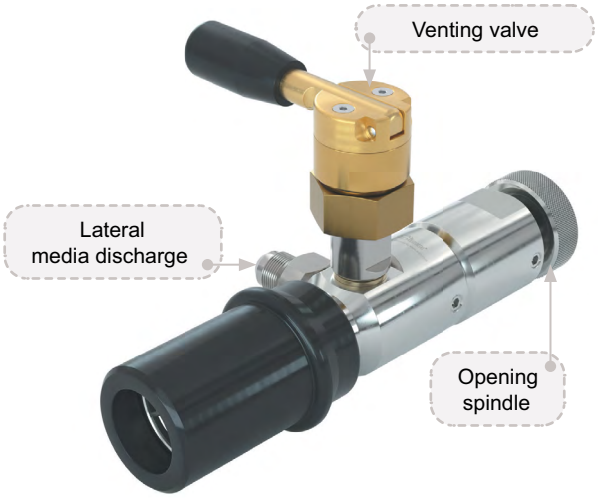

Features
- Discharge via filling port
- Actuation with opening spindle
- With venting valve (optionally also without venting valve)
- No additional shut-off device required
- Plastic thermal protection on vehicle-side connection
- Only suitable for WEH® TN1 H2 Receptacles without filter

The WEH® TK6 H_2 Defueling nozzle is used for maintenance and inspection of hydrogen vehicles.
For maintenance, all pressure or fuel tanks must be discharged. WEH has designed the TK6 H_2 for easy connection and discharging of the hydrogen tanks.

The defueling nozzle is simply placed onto the receptacle in the car and the knurled spindle is screwed in until it stops.
Then, the WEH® TN1 H_2 Receptacle is opened and the fuel tanks can be discharged via the lateral media discharge.

Application
Defueling nozzle for discharging hydrogen fuel tanks of cars via filling receptacle, only to be used with WEH® TN1 H_2

Receptacles without filter. Operation only by specially trained personnel. Not for self-service operation!
Attention: The TK6 H_2 may not be used for filling!

Technical data

Characteristics	Basic version
Technical nominal size (TNW)	6 mm
Nominal pressure	PN = 35 MPa
Max. allowable operating pressure	PS = 45 MPa
Media temperature range	-20 °C up tp +85 °C
Ambient temperature range	-40 °C up to +85 °C
Material	Corrosion resistant
Sealing material	Hydrogen resistant
Design	With plastic thermal protection on vehicle-side connection, opening spindle and venting valve
Weight	Approx. 1.2 kg

Other designs on request

Ordering - WEH® TK6 H_2 Defueling nozzle with venting valve

approx. dimensions (mm)

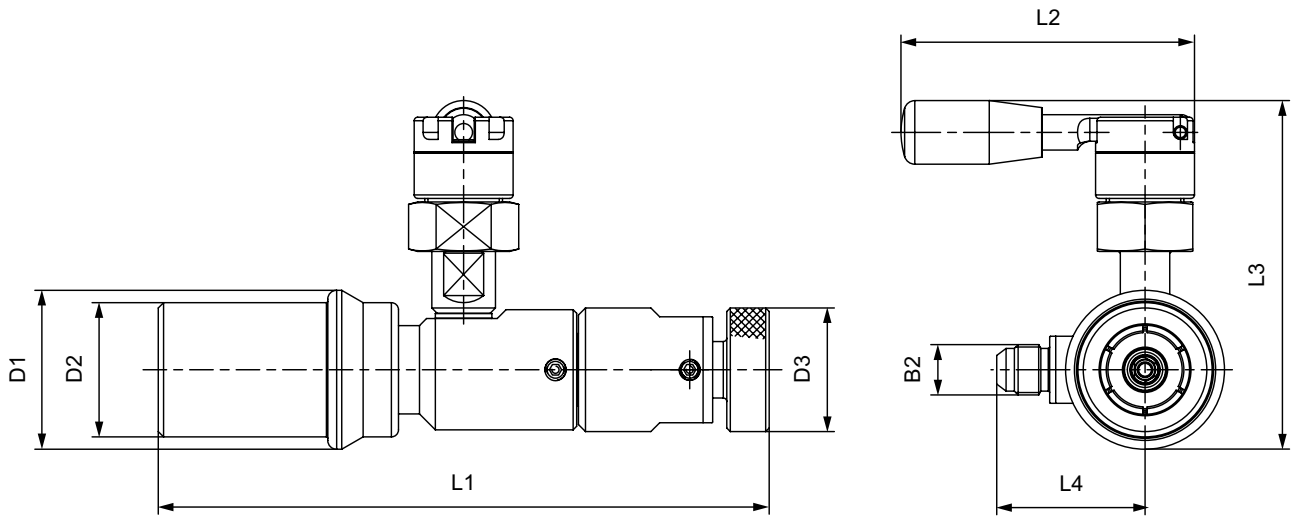

Part No.	Description	Pressure (MAWP)	B2 (male thread)	L1	L2	L3	L4	D1	D2	D3
C1-104732-X01	TK6 H_2	45 MPa	UNF 9/16“-18*	min. 173 / max. 180	83	99	42	45	38	35

* acc. to SAE J514, 37° cone

Accessories

The following accessories are available for the WEH® TK6 H_2 Defueling nozzle:

Pressure hose

Pressure hose for connection to the defueling nozzle, complete with fittings and press-fittings supported by coil spring stubs.

Not suitable for refueling with pre-cooled hydrogen acc. to SAE J2601.

Design hose: max. operating pressure PS: 45 MPa / nominal bore for fitting: 4.5 mm / media temperature range: -20 °C up to +90 °C



Part No.	B1/B2 (female thread)	Hose length
E68-60809	UNF 9/16“-18*	3 m
E68-60812	UNF 9/16“-18*	4 m
E68-60813	UNF 9/16“-18*	5 m

* acc. to SAE JIC, 37° cone

WEH® TN1 H_2 Receptacle with tube fitting, without filter

approx. dimensions (mm)



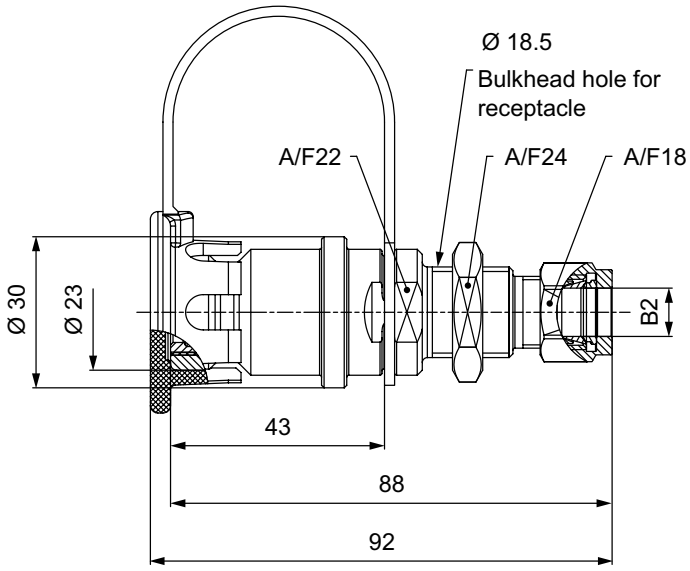

Part No.	Description	TNW	Pressure (MAWP)	B1
C1-18481/4-X01	TN1 H_2	8 mm	43,75 MPa	Tube Ø 3/8"*
C1-32456-X01	TN1 H2 (EC79)	8 mm	43,75 MPa	Tube Ø 10*

* double ferrule fitting

WEH® TNS1 H_2 Service receptacle

To prevent damage in the defueling nozzle while leak testing during maintenance in the course of which pressure is applied, we recommend the use of a service receptacle. The receptacle also protects the defueling nozzle from dirt ingress whilst not in use.



Part no.	Description
C1-157639	TNS_1 H_2 Service receptacle incl. protection cap

Spare parts

Various parts are available as spares for the WEH® TK6 H_2 Defueling nozzle.



Position	Part no.	Description
1	E80-111760	Sliding sleeve
	On request	Maintenance spray

Description

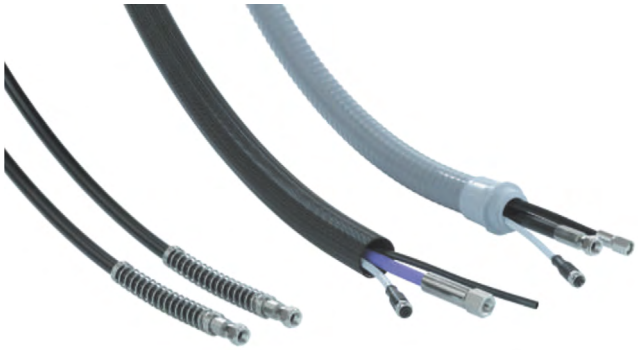

Features
- Different lengths available
- Tailor-made according to customers‘ specifications

We offer hydrogen hoses for connecting our fueling nozzles to the breakaway coupling or fueling station. The hoses are available with suitable fittings. The hoses or hose sets can be delivered in different standard sizes. On request the hydrogen hoses are also available in other lengths.

Application
Hydrogen hoses / hose sets for installation at the fueling station.

Technical data

Characteristics	Basic version
Max. allowable operating pressure PS	45 MPa (hoses for TK16 H_2, TK16 H_2 High Flow, TK25 H_2, TK6 H_2) 49 MPa (hoses for TK20-S2 $H_2$35 MPa) 87,5 MPa (hoses for TK20-S1 $H_2$70 MPa)
Media temperature range	-20 °C up to +90 °C* (hoses for TK16 H_2, TK16 H_2 High Flow, TK25 H_2, TK6 H_2) -40 °C up to +85 °C (hoses for TK20-S1 H_2 70 MPa, TK20-S1 $H_2$35 MPa)
Ambient temperature range	-40 °C up to +85 °C
Sealing material	Hydrogen resistant

* not suitable for refueling with pre-cooled hydrogen acc. to SAE J2601

Ordering - Hose set for TK20-S1 H_2 70 MPa

Hose set for connecting fueling nozzle and TSA30-S1 H_2 70 MPa breakaway coupling, complete with filling hose and braided protection hose as cover.

Design filling hose:
max. operating pressure PS: 96.25 MPa / nominal bore at fitting: 4.5 mm / media temperature range: -40 °C up to +85 °C

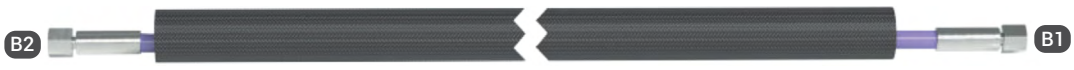

Part no.	B1/B2 (female thread)	Hose length
C1-189992	UNF 9/16“-18*	3 m
C1-189993	UNF 9/16“-18*	4 m
C1-189994	UNF 9/16“-18*	5 m

* DKJ 58°

Ordering - Hose set for TK20-S1 H₂ 70 MPa ENR

Hose set for connecting fueling nozzle and TSA30-S1 H2 70 MPa breakaway coupling, complete with filling hose and braided protection hose as cover.

Design filling hose:
max. operating pressure PS: 96.25 MPa / nominal bore at fitting: 4.5 mm / media temperature range: -40 °C up to +85 °C

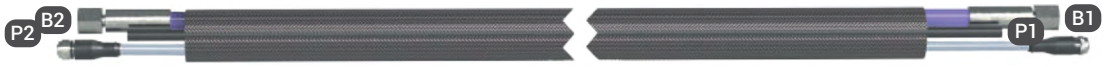

Part no.	B1/B2 (female thread)	P1/P2	Hose length
E68-161886	UNF 9/16“-18*	Ø 6	3 m
E68-161887	UNF 9/16“-18*	Ø 6	4 m
E68-161888	UNF 9/16“-18*	Ø 6	5 m

* DKJ 58°

Ordering - Hose set for TK20-S2 H₂ 35 MPa

Hose set for connecting fueling nozzle and TSA30-S1 H₂ breakaway coupling, complete with filling hose, data cable, pur ging line and braided protection hose as cover.

Design filling hose:
max. operating pressure PS: 49 MPa / nominal bore at fitting: 4.5 mm / media temperature range: -40 °C up to +85 °C



Part no.	B1/B2 (female thread)	Hose length
C1-189989	UNF 7/16“-20*	3 m
C1-189990	UNF 7/16“-20*	4 m
C1-189991	UNF 7/16“-20*	5 m

* acc. to SAE JIC, 37° sealing cone

Ordering - Hose set for TK20-S2 H₂ 35 MPa ENR

Hose set for connecting fueling nozzle and TSA1 H₂ breakaway coupling, complete with filling hose and braided protection hose as cover.

Design filling hose:
max. operating pressure PS: 49 MPa / nominal bore at fitting: 4.5 mm / media temperature range: -40 °C up to +85 °C

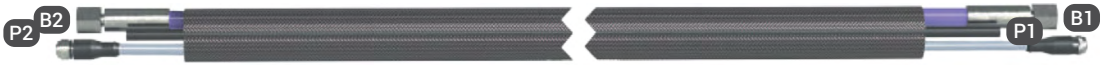

Part no.	B1/B2 (female thread)	P1/P2	Hose length
E68-174299	UNF 7/16“-20*	Ø 6	3 m
E68-174300	UNF 7/16“-20*	Ø 6	4 m
E68-174301	UNF 7/16“-20*	Ø 6	5 m

* acc. to SAE JIC, 37° sealing cone

Ordering - Hose set for TK20-S3 H_2 35 MPa Medium Flow

Hose set for connecting fueling nozzle and TSA30-S1 H_2 breakaway coupling, complete with filling hose, data cable, purging line and braided protection hose as cover.

Design filling hose:
max. operating pressure PS: 49 MPa / nominal bore at fitting: 4.5 mm / media temperature range: -40 °C up to +85 °C

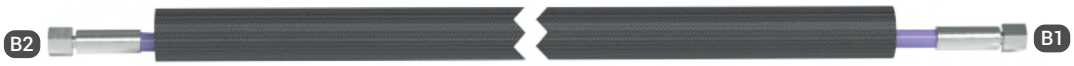

Part no.	B1/B2 (female thread)	P1/P2	Hose length
C1-189989	UNF 7/16“-20*	Ø 6	3 m
C1-189990	UNF 7/16“-20*	Ø 6	4 m
C1-189991	UNF 7/16“-20*	Ø 6	5 m

* acc. to SAE JIC, 37° sealing cone

Ordering - Hose set for TK20-S3 H_2 35 MPa ENR Medium-Flow

Hose set for connecting fueling nozzle and TSA1 H_2 breakaway coupling, complete with filling hose, data cable, purging line and braided protection hose as cover.

Design filling hose:
max. operating pressure PS: 49 MPa / nominal bore at fitting: 4.5 mm / media temperature range: -40 °C up to +85 °C

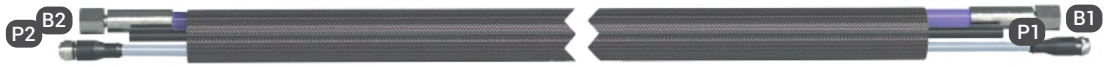

Part no.	B1/B2 (female thread)	P1/P2	Hose length
E68-174299	UNF 7/16“-20*	Ø 6	3 m
E68-174300	UNF 7/16“-20*	Ø 6	4 m
E68-174301	UNF 7/16“-20*	Ø 6	5 m

* acc. to SAE JIC, 37° sealing cone

Ordering - Hose set for TK16 H_2 35 MPa and TK16 H_2 High-Flow 35 MPa

Hose set for connecting fueling nozzle and TSA1 H_2 breakaway coupling, complete with filling and venting hose, fittings and press-fittings supported by coil spring stubs. Not suitable for refueling with pre-cooled hydrogen acc. to SAE J2601.

Design filling/venting hose:
max. operating pressure PS: 45 MPa / nominal bore at fitting: 4.5 mm / media temperature range: -20 °C up to +90 °C



Part No.	B1/B2 (female thread)	C1/C2 (female thread)	Hose length
C1-60917	UNF 9/16“-18*	UNF 7/16“-20*	3 m
C1-60920	UNF 9/16“-18*	UNF 7/16“-20*	4 m
C1-60923	UNF 9/16“-18*	UNF 7/16“-20*	5 m

* acc. to SAE JIC, 37° cone

Ordering - Hose set for TK16 H₂ (35 MPa) and TK16 H₂ High-Flow (35 MPa) with data interface

Hose set for connecting fueling nozzle and TSA1 H₂ breakaway coupling, complete with filling and venting hose, hose fittings, plastic spiral hose and cable for data interface.
Not suitable for refueling with pre-cooled hydrogen acc. to SAE J2601.

Design filling/venting hose: max. operating pressure PS: 45 MPa / nominal bore at fitting: 4.5 mm (filling hose) resp. 2 mm (venting hose) / media temperature range: -20 °C up to +90 °C

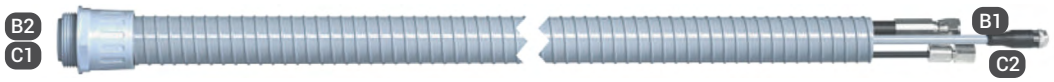

Part No.	B1/B2 (female thread)	C1/C2 (female thread)	Hose length
C1-90698	UNF 9/16“-18*	M12x1.5	3 m
C1-94428	UNF 9/16“-18*	M12x1.5	4 m
C1-94429	UNF 9/16“-18*	M12x1.5	5 m

* acc. to SAE JIC, 37° cone

Ordering - Hose set for TK25 H₂ (25 MPa / 35 MPa)

Hose set for connecting fueling nozzle and TSA5 H₂ breakaway coupling, complete with filling and venting hose, fittings and press-fittings supported by coil spring stubs. Not suitable for refueling with pre-cooled hydrogen acc. to SAE J2601.

Design filling/venting hose: max. operating pressure PS: 45 MPa / nominal bore at fitting: 5.6 mm (filling hose) resp. 4.5 mm (venting hose) / media temperature range: -20 °C up to +90 °C



Part No.	B1/B2 (female thread)	C1/C2 (female thread)	Hose length
C1-152556	UNF 7/8“-14*	UNF 9/16“-18*	3 m
C1-152557	UNF 7/8“-14*	UNF 9/16“-18*	4 m
C1-152558	UNF 7/8“-14*	UNF 9/16“-18*	5 m

* acc. to SAE JIC, 37° cone

Ordering - Pressure hose for TK6 H₂ (35 MPa)

Pressure hose for connecting to the defueling nozzle, complete with fittings and press-fittings supported by coil spring stubs. Not suitable for refueling with pre-cooled hydrogen acc. to SAE J2601.

Design hose:
max. operating pressure PS: 45 MPa / nominal bore at fitting: 4.5 mm / media temperature range: -20 °C up to +90 °C



Part No.	B1/B2 (female thread)	Hose length
E68-60809	UNF 9/16“-18*	3 m
E68-60812	UNF 9/16“-18*	4 m
E68-60813	UNF 9/16“-18*	5 m

* acc. to SAE JIC, 37° cone

Service receptacle

TNS12 H_2

Description



Features
- Integrated shut-off valve
- Low-noise discharging
- Sealing-friendly design
- Incl. protection cap

new

Vehicles running on hydrogen have to be serviced and checked regularly. Therefore it is necessary that all pressure vessels or fuel tanks are discharged. The WEH® TNS10 H_2 Service receptacle has been specially developed for this purpose.
It is mounted on the body panel of the hydrogen vehicle and enables easy discharging of the fuel tank.

For the WEH® TNS10 H_2 the suitable WEH® TW110 H_2 Service connector is also available.
The TW110 is simply connected to the service receptacle and discharging can begin. When discharging is complete, the service connector can be disconnected again.

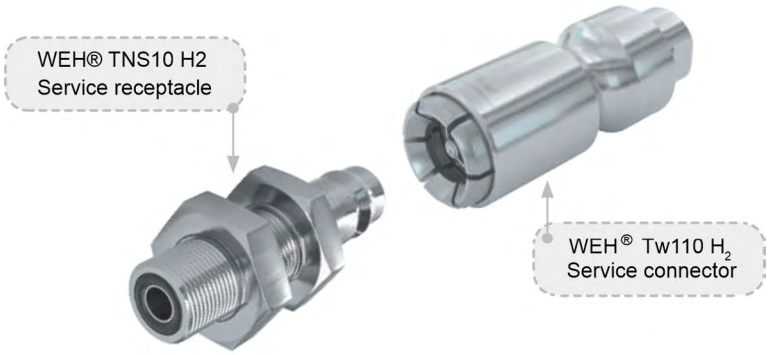

Application
Service connector
Service receptacle for discharging hydrogen fuel tanks.
Operation only by specially trained service personnel. Not for self-service operation!
Attention: The TNS10 H_2 may not be used for filling!

Note:
The TNS10 H_2 may only be used in conjunction with a suitable upstream shut-off device or valve (e.g. ball valve)!

Technical data

Characteristics	Basic version
Technical nominal size (TNW)	6 mm
Nominal pressure	PN = 1.6 MPa
Max. allowable operating pressure	PS = 2 MPa
Temperature range	−40 °C up to +85 °C
Material	Corrosion resistant stainless steel
Sealing material	Hydrogen resistant
Design	Incl. integrated shut-off valve, bulkhead fitting and protection cap

Other designs on request

Ordering - WEH® TNS12 H₂ Service receptacle

approx. dimensions (mm)

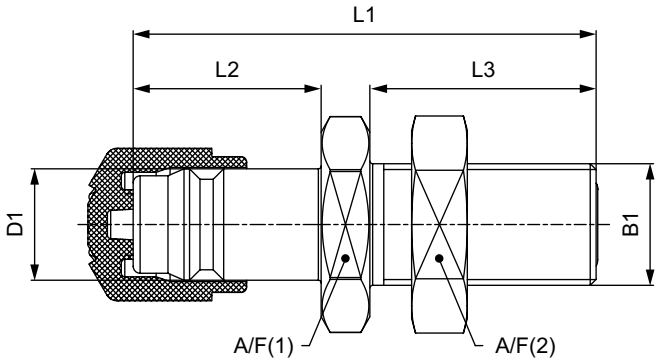

Part No.	Description	TNW	Pressure (MAWP)	B1 (male thread)	L1	L2	L3	D1	A/F(1) / A/F(2)
C1-151481	TNS10 H₂	6 mm	45 MPa	UN 11/16“-16 for sealing with O-Lok®Face Seal* for tube Ø 10 (3/8“)	66,5	27	32,5	16	27

* Face Seal acc. to SAE J1453

Accessories

The following accessories are available for the WEH® TNS10 H₂ Service receptacle:

WEH® TW110 H₂ Service connector

Service connector with integrated shut-off valve for discharging the pressure vessels and fuel tanks of hydrogen-powered vehicles.

approx. dimensions (mm)

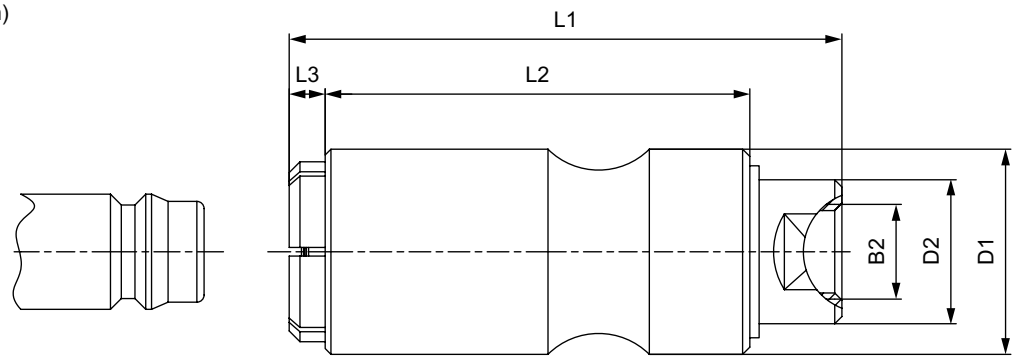

Part No.	Description	TNW	Pressure (PS)	B1 (female thread)	L1	L2	L3	D1	D1
C1-84461	TW110 H₂	8 mm	20 bar	G1/4"	77	59	5	28,5	20

Spare parts

Various parts are available as spares for the WEH® TNS10 H_2 Service receptacle.

Protection cap

To protect the TNS10 H2 service receptacle from dirt ingress and damage whilst not in use.



Part No.	Description
E80-83726	Protection cap

Description



Features
- **Quick connector:** Laborious screwing on is not necessary Connection and release in less than one second
- **High flow values:** Continuous technical nominal width of 10 mm for **maximum flow rate**
- **Compatibility:** Suitable for typical tube connections on H2 trailers
- **Grip sleeve lock**: Prevents unintentional loosening of connector
- **H2 compatibility**: Optimized for hydrogen applications with **high operating pressures**
- **Robust design:** Durable and reliable even under the most demanding conditions

new

The challenge is reliable supply of hydrogen fueling stations if hydrogen cannot be produced directly on site. Along with the establishment of an H_2 pipeline network, trailers for fine distribution are required that can transport hydrogen from central filling stations to fueling stations. The connection of the lines to these trailers is currently accomplished using mostly tube fittings, which are time-intensive and require special training.

The WEH® Connector TW850-S60 H_2 530 bar is the optimal solution for safe, fast and efficient filling of hydrogen tanks, such as H2 trailers for fueling station supply, with a maximum operating pressure of up to 530 bar.

Thanks to the innovative clamping jaw mechanism and continuous technical nominal width of 10 mm, the quick connector enables the highest flow values and significantly reduces filling time. Easy handling and the elimination of laborious tube fittings make the TW850-S60 H_2 530 bar an essential tool for filling hydrogen trailers and suppliers.

Thanks to the integrated locking lever, unintentional loosening of the connector is reliably prevented, which maximizes safety during the filling process. With its H_2 compatibility and robust design, the TW850-S60 H_2 530 bar sets new standards in hydrogen logistics and supports the growing demand for efficient solutions for the energy revolution.

Areas of use and applications
Filling hydrogen containers, e.g. H_2 trailers for fueling station supply, with a max. operating pressure of up to 530 bar.

Note: The connector is not designed for fueling H2 vehicles.
The media flow must be blocked off using a separate valve, there is no check valve in the TW850-S60 H_2 530 bar.

Technical data

Characteristics	Basic version
Technical nominal size (TNW)	up to 10 mm, depending on design
Max. allowable operating pressure	PS = up to 530 bar, depending on design
Temperature range	-40 °C to +85 °C
Medium	Hydrogen
Leak rate	1 x 10-³ mbar x l/s
Materials	Corrosion resistant
Sealing material	NBR
Actuation	Manual via the grip sleeve

Ordering - WEH® TW850-S60 H_2 quick connector

approx. dimensions (mm)

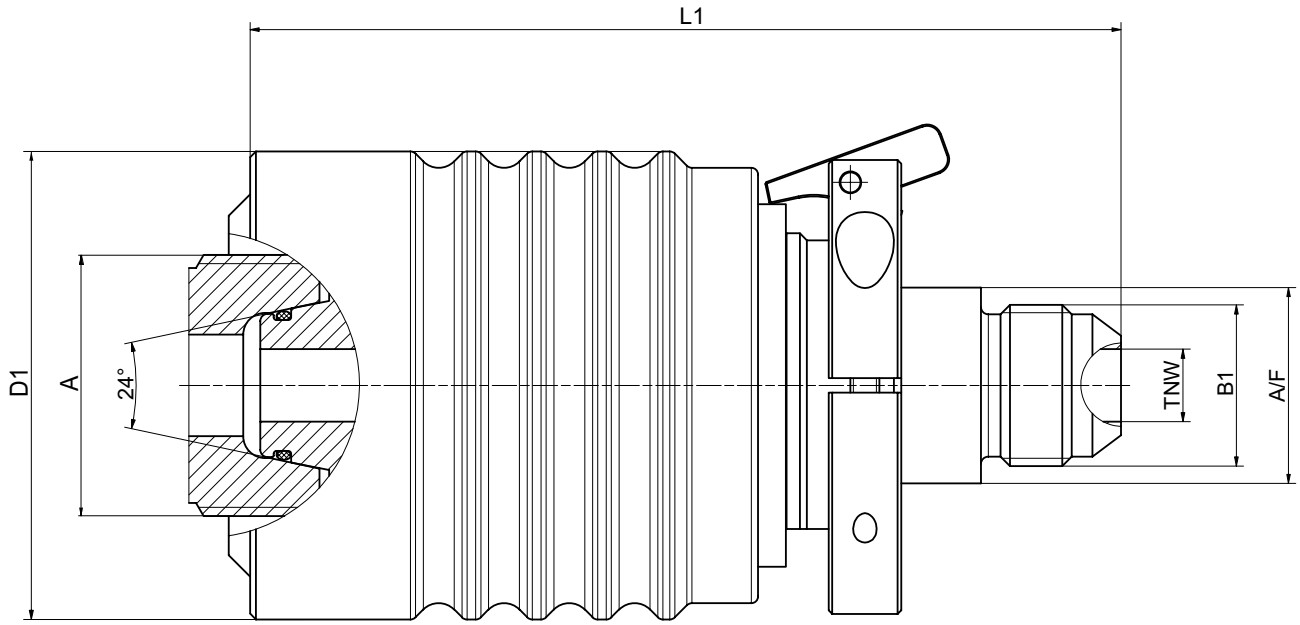

Part no.	Body size	Technical nominal size (TNW)	Connection size A (female thread)	Connection standard A	B1 (male thread)	L1	D2	A/F
C1-190856	6	5 mm	W21.8x1/14" - LH	DIN 477-1	7/8"-14 UNF*	109	47	24
C1-189758	4	7 mm	W30x2.0 - LH	DINEN ISO 5145 (No. 38)	7/8"-14 UNF*	119	57,5	27
C1-186400	6	10 mm	M36x2.0-LH	DIN EN ISO 8434-1	7/8"-14 UNF*	120	64,5	27
C1-189766	7	10 mm	M42x2.0 - LH	DIN EN ISO 8434-1	7/8"-14 UNF*	129	83	32
C1-190859	8	10 mm	M52x2.0 - LH	DIN EN ISO 8434-1	7/8"-14 UNF*	130	93	32

* acc. to SAE J514, 37° cone
Other connection types on request..

Ordering - WEH® TW850-S60 H_2 quick connector 530 bar

approx. dimensions (mm)

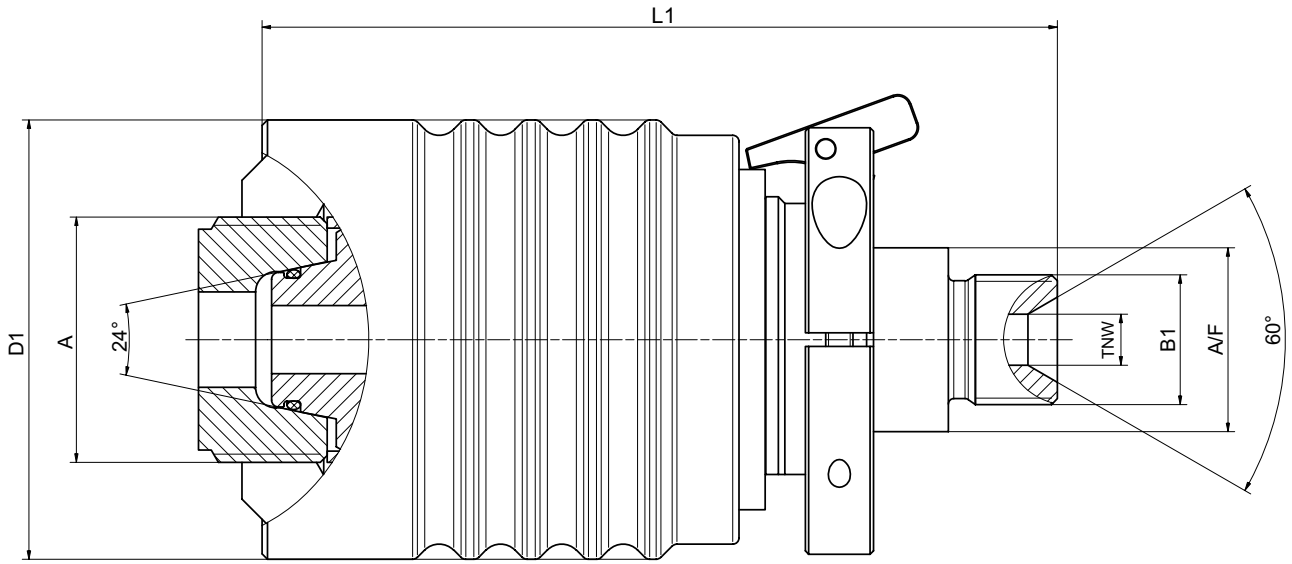

Part no.	Body size	Max. operating pressure (PS)	Technical nominal size (TNW)	Connection size A (male thread)	Connection standard A	B1 (male thread)	L1	D2	A/F
C1-190959	2	530 bar	7 mm	W21.8x1/14" - LH	DIN 477-1	3/4"-16 UNF	106	47,5	24
C1-189759	4	530 bar	5 mm	W30x2.0 - LH	DINEN ISO 5145 (No. 38)	3/4"-16 UNF	116	57,5	27
C1-189768	6	530 bar	7,5 mm	M36x2.0-LH	DIN EN ISO 8434-1	3/4"-16 UNF	117	64,5	27
C1-189767	7	530 bar	7,5 mm	M42x2.0 - LH	DIN EN ISO 8434-1	3/4"-16 UNF	126	83	32
C1-190960	8	530 bar	7,5 mm	M52x2.0 - LH	DIN EN ISO 8434-1	3/4"-16 UNF	127	93	32

Other connection types on request.

Accessories

The following accessories are available for the WEH® TW_{850}-S_{60} H_2 quick connector :

Pressure hose

Pressure hose for connection to the quick connector, complete with fittings.
Media temperature range: -40°C to +65°C

Part no.	Description	Technical nominal size (TNW)	Connection (female thread)	max. allowable operating pressure (PS)	Hose length
C1-143166	Pressure hose H_2 35 MPa	5,6 mm	UNF 7/8"-14	450 bar	4 m
C1-187988	Pressure hose H_2 35 MPa	7,5 mm	UNF 3/4"-16	962,5 bar	4 m

Other hose lengths are available on request.

Manifold block

TMF900-S1 H_2

Description



Features
- Reduces the number of sealing points in gas systems and vehicles
- Simple and fast installation
- Dimensions, type, and number of connections can be customized according to customer requirements.

new

Gas distributors reduce the number of sealing points and simplify installation, which can be carried out in a single block. They can be used to distribute gases to different pipes and to combine fittings in a manifold. Dimensions and the type and number of connections can be customized according to customer requirements. Filters, check valves, and other components can also be installed at the factory.

Application
Distribution block for hydrogen applications in gas engineering systems or vehicles.

Technical data

Characteristics	Basic version
Max. allowable operating pressure PS	Depending on the project
Temperature Range	-40°C up to +85°C
Material	Stainless steel
Design	Distribution block with one media inlet and six outlets, as well as mounting holes..

Dimensions, type, and number of connections can be customized to customer requirements

Ordering - WEH® TMF900-S1 H_2 manifold block

approx. dimensions (mm)

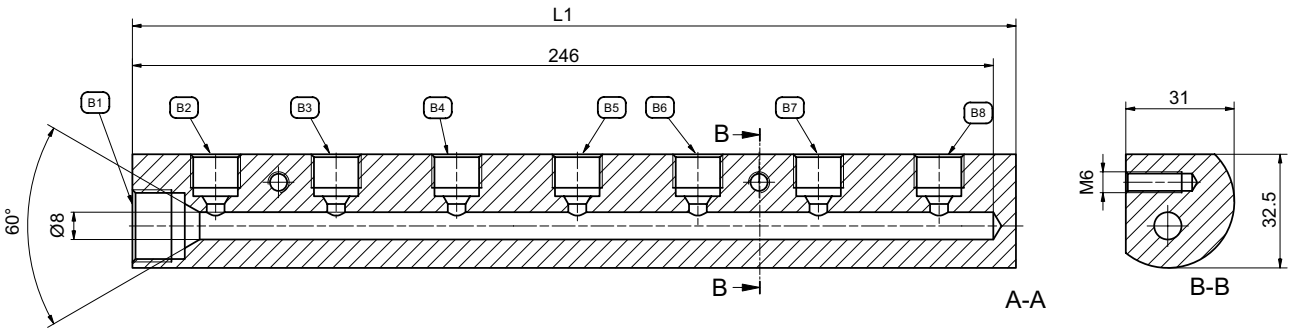

Part no.	Description	Pressure (PS)	B1 (female thread)	B2-B8 (female thread)	L1
C1-192622	TMF900-S1 H_2	48.125 MPa	13/16“-16 UN	9/16“-18 UNF	253

Abbreviation	Definition
Pressure specifications	(all pressure data is to be understood as overprint, unless otherwise stated)
PN	Nominal pressure after temperature compensation at 15 °C (59 °F)
PS	Maximum allowable operating pressure acc. to Pressure Equipment Directive 2014/68/EU, Article 2 paragraph 8
PT	Hydrostatic test pressure acc. to Pressure Equipment Directive 2014/68/EU, Annex I no. 7.4
PP	Actuation pressure for hydraulic and pneumatic components
PC	Pressure at which the check valve opens and the first indication of flow occurs
WP	'Working pressure' means the maximum pressure to which a component is designed to be subjected to and which is the basis for determining the strength of the component under consideration
MAWP	Max. allowable operating pressure at which the weakest point of the system or the vessel (e.g. cylinder valve) can operate at a certain temperature during normal operation
Dimensions	
L1, L2, L3 ...	Length specification
D1, D2, D3 ...	Diameter specification
A/F(1), A/F(2) ...	Wrench size specification
Ports	
A / X	Customer-specific port (test piece, sample, cylinder valve, handwheel respiratory protective equipment)
B1, B2, B3 ...	Media ports
C1, C2, C3 ...	Gas recirculation ports
P1, P2, P3 ...	Pilot pressure ports
MA1, MA2 ...	Measuring ports
Q	Drain port filter
G	Mounting bores
Others	
DN	Nominal size (DN) acc. to Pressure Equipment Directive 2014/68/EU, whereby the largest, pressurized diameter of the media or pilot pressure connections of the WEH Device (A, B1, B2, B3 or C1, C2, C3 and P1, P2, P3) which faces the customer´s pipe system, is relevant. Expressed by a rounded, dimensionless number, e. g. DN 25.
TNW	The technical nominal size (formerly expressed by "effective diameter") is the smallest diameter available for the media flow of the respective pressure device. Expressed by a number with unit, e. g. 12 mm.
µm	Max. diameter of the filtered particle
Kv	Is the discharge of water in m^3/h at a pressure drop of 1 bar (14.5 psi), acc. to DIN/EN 60534-2
Cv	Is the discharge of water in gallons per minute at a pressure drop of 1 psi, acc. to DIN/EN 60534-2
IR	Infrared data interface
ENR	Exchangeable data interface (exchangeable nozzle receiver)
TS	Maximum allowable temperature acc. to Pressure Equipment Directive 2014/68/EU, Article 2 paragraph 9

Abbreviation	Definition
Breakaway force	Is the force range, in which the breakaway releases
NC	Normally closed (initial position of shut-off valve)
NO	Normally open (initial position of shut-off valve)
Technical explanations	
Term	Definition
Temperature range	Is the temperature range in which the WEH® Product can be used. If no explicit information on medium and ambient temperature is given, this temperature range applies to both medium and environment.
Media temperature range	Is the temperature range of the medium used, which can flow through the WEH® Product (may change depending on the time of measurement).
Ambient temperature range	Is the temperature range of the environment in which the WEH® Product can be used.
Leak rate	Is the maximum external leak rate, which the WEH® Product exhibits in delivery condition.
Internal leak rate	The internal leak rate depends, among other things, on type of application, medium and pressure difference on the WEH® Product. On request it can be specified more precisely.
Max. side load	Is the max. allowable sum of all external forces that may act on the device under intended use. Note: External forces can affect the life time of WEH® Products and can cause damage. Tensile and transverse loads as well as vibrations and pressure impacts need to be considered, e.g. by user side measures such as on site mountings and similar. Therefore, lateral forces such as whipping hoses or other equipment must be avoided. WEH® Products should be installed in such a way, that lateral forces which could lead to leakage or damage can not occur. Special applications require a special consultation before selecting the product.
Products with pneumatic actuation	The customer has to ensure there is adequate axial movement when pneumatically actuated WEH® Products are used in automated systems, see maximum side load. Ideally the products should be mounted with a floating joint or introduced individually to prevent the possibly existing clamping jaws getting blocked or jammed in the thread of the test piece.
Sealing material	On request the WEH® Product can be adapted to customer specific applications regarding to the sealing materials used. The clarification of the media compatibility and suitability of the adapted WEH® Product for the final application is always the responsibility of the end user.
Corrosion resistant	WEH® Products are designed for use in temperate climate zones - with low levels of humidity and salinity in the air. An accelerated formation of rust or corrosion may occur at or near the sea. Therefore, reduce the inspection interval recommended for normal use and send in the WEH® Product for maintenance immediately if you notice increased soot, rust or corrosion.
Storage / life time of components	There are certain requirements for every WEH® Product. WEH® Products are generally products which may be subject to wear and fatigue during operation and depending on your individual application/use. For details - in particular regarding the corresponding minimum inspection and maintenance intervals – please refer to the respective operating instructions for the WEH® Product.

Subject	Definition
Technical data	Unless otherwise stated, the technical data in catalogs, data sheets and operating instructions are based on tests with nitrogen that are in the development phase or at the end of development. Leakage data are based on measurements with helium.
Intended use	For the intended use of WEH® Products, please refer to the respective operating instructions. The following applications are generally excluded for WEH® H2 and CNG products, unless these are expressly permitted in the operating instructions: . aerospace applications, e.g. in aircrafts . shipping applications . applications offshore and in littoral areas . applications within defense and weapons technology
Safe product selection	Our WEH® Products are designed to be operated by qualified professional users (insofar as WEH® Products are also designed to be operated by other users in individual cases, this is explicitly stated in the corresponding operating instructions). Please note that WEH does not know your system and therefore - also due to the large number of different potential applications of WEH® Products - cannot perform tests on all potential types of application. You alone are responsible for the selection, configuration and suitability of WEH® Products, especially according to the requirements of your system. Before purchasing WEH® Products, please particularly ensure that our products are compatible with your intended use, your performance data, your material and fluids, your system concept and your system limits according to our product specifications. Please also consider your technical and legal requirements for operation, handling and maintenance. The quality and safety of WEH® Products is our highest priority. For this reason, WEH® Products may not be used outside the specifications in the relevant data sheets and product descriptions. If you are not sure whether the WEH® Product is suitable for your system and intended use, please contact us in advance. We also strongly recommend that you refrain from using third-party spare parts or a combination of WEH® Products with unsuitable third-party products. You alone are responsible for reviewing the suitability of third-party products. WEH® Products and WEH® Spare parts comply with our quality and safety standards.
Explanation on the Pressure Equipment Directive	"In general, WEH® Products with a maximum allowable operating pressure of more than 0.5 bar (PS) fall within the scope of application of the Pressure Equipment Directive 2014/68/EU, are generally classified as pressure accessories in accordance with Article 2 (5) of the same and are considered to be similar to piping. These WEH® Products may not be used as safety accessories. Furthermore, it is pointed out, that these WEH® Products are designed and placed on the market in accordance with the requirements of Article 4 (3) of the Pressure Equipment Directive 2014/68/EU. For some products a different classification and/or categorisation is required or can be conducted on request. In these cases, if legally required, a conformity assessment procedure in accordance with Annex III of the Pressure Equipment Directive 2014/68/EU can and will also be conducted and the conformity can be declared by means of an EU Declaration of Conformity in accordance with Annex IV of the Pressure Equipment Directive 2014/68/EU. In these cases, the EU Declaration of Conformity is enclosed with the product.
External change management	WEH reserves the right to update, optimise and adjust its products continuously. This may result in corresponding changes of the product. Customers will be informed proactively or unsolicited by WEH only in individual cases about product updates, product optimisations and/or product adaptations that have been carried out. You are free to contact WEH at any time to request information about any product updates, product optimisations and/or product adjustments.

All information/recommendations in this catalog are non-binding and are particularly subject to possible deviations or changes. For any binding information/recommendations, please refer to the verified information/ recommendations in our individual orders. Particularly, due to the wide range of possible applications of WEH® Products and the unknown parameters
and operating conditions linked to them, the accuracy and/or completeness of the information/recommendations in this catalog cannot be guaranteed with respect to certain individual cases. In doing so, we would like to refer once again to the information/recommendations provided in individual orders.

The application limits indicated in this catalog (e.g. for pressure, temperature, etc.) are generally theoretical values determined in a test environment. As the concrete operating conditions could differ, we cannot ensure that these values apply to a specific customer application. During the practical use, you should particularly consider that the mutual influence of operational parameters could result in changes of the maximum values. Especially, in case of any unusual operating conditions, please contact WEH before using any WEH® Products. We therefore strongly recommend that you also require any necessary binding information/recommendations to be included by us in the individual orders.

Furthermore, we point out that we cannot assume any warranty or accept any responsibility for printing errors, incomplete information or misinterpretations. Illustrations and/or images are particularly provided for illustrative purposes only and may differ in some details from the actual product. Moreover, dimensions and other technical details in this catalog are non-binding information and are provided for illustrative purposes only. The product's exact form and design result exclusively from the specific individual order. In particular, certain information/recommendations in the catalog only become integral part of the contract if they have been expressly contractually agreed.

Only the latest version of our catalog and other product related documents is valid and applicable. Please ensure that you always use the latest catalog's and documents' versions. Please feel free to contact WEH at any time and request the latest versions. Our General Terms and Conditions and the Agreement on Protection of Know-How and Quality Assurance shall apply to deliveries and other services, unless expressly agreed otherwise. In principle, we do not accept the General Terms and Conditions of our customers or third parties. Thank you for your understanding.



Manufacturing Facility

+ 55 15 3264-1222

gepef@gepef.com.br

www. gepef.com.br

Avenida do Trabalhador, 1.680
ZIP Code 18552-100 - Boituva - SP
Brazil

Head Office & Operations Center

Av. Antônio Ângelo Amadio 681
ZIP Code 18552-112 - Boituva - SP
Brazil

Branch Office – Belo Horizonte, MG – Brazil - Regional sales operations for Minas Gerais and Brazil's Central-West Region

+ 55 31 3327-4459

gepef-bh@gepef.com.br

www.gepef.com.br

Avenida Professor Mário Werneck, 300
(10th Floor – Room 1004 – Tower 2) – Estoril District
ZIP Code 30455-610 - Belo Horizonte - MG
Brazil

Developed by: JDM Digital Mídia +55 11 99286 0900