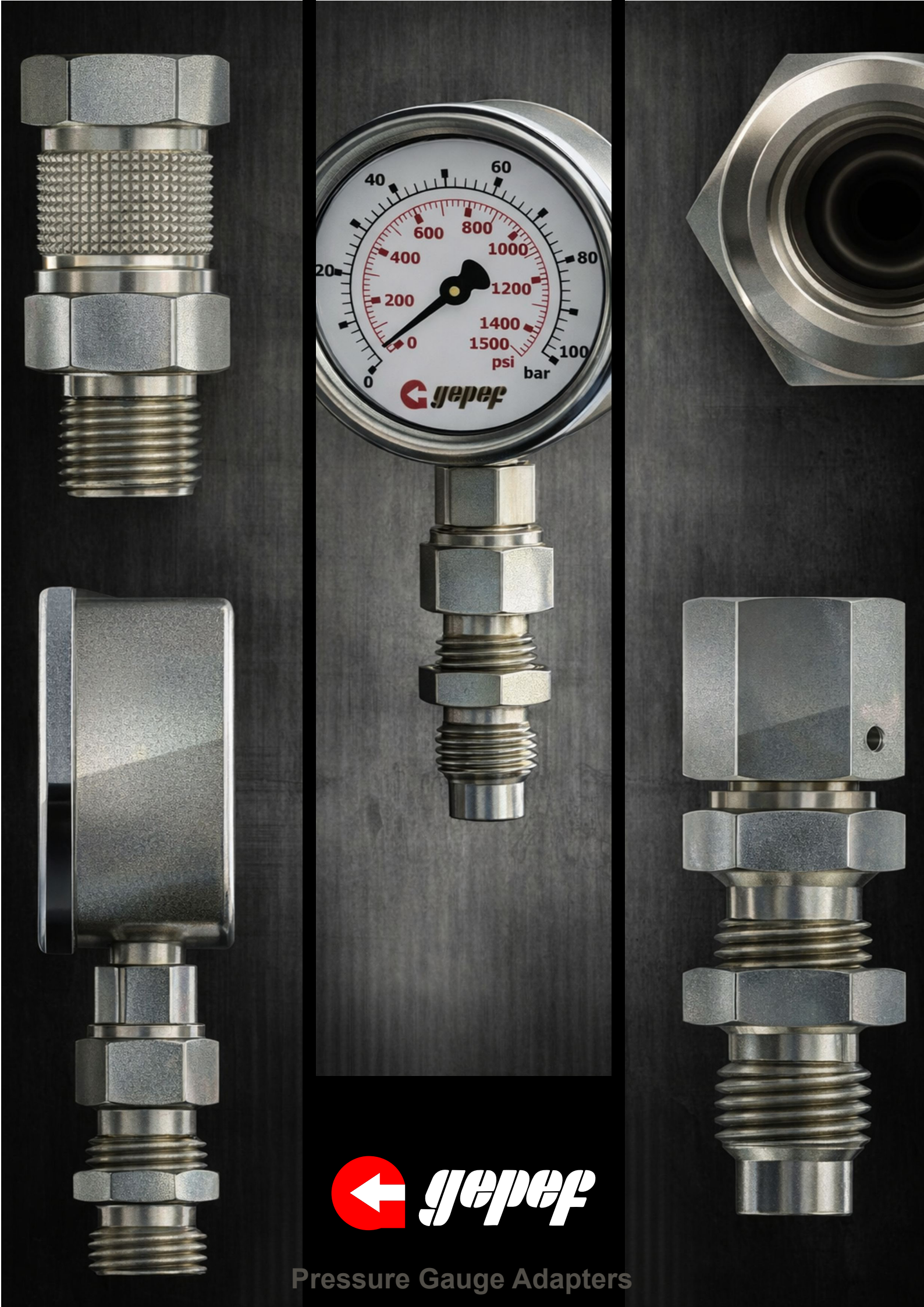

gepef

Pressure Gauge Adapters

PRESSURE GAUGE ADAPTERS

Pressure Gauge Adapters are designed for the interconnection of pressure gauges and pressure transducers with system components such as capillary test hoses, pressure test points, tubes, and related fittings.
They can be used in manual operation, mounted on brackets, or installed on panels. An optional swivel system allows the pressure gauge to be oriented for optimal readability and installation flexibility.
If the required adapter configuration is not available in this catalog, please contact us.

Note: All pressure gauge adapters are supplied without an internal valve.

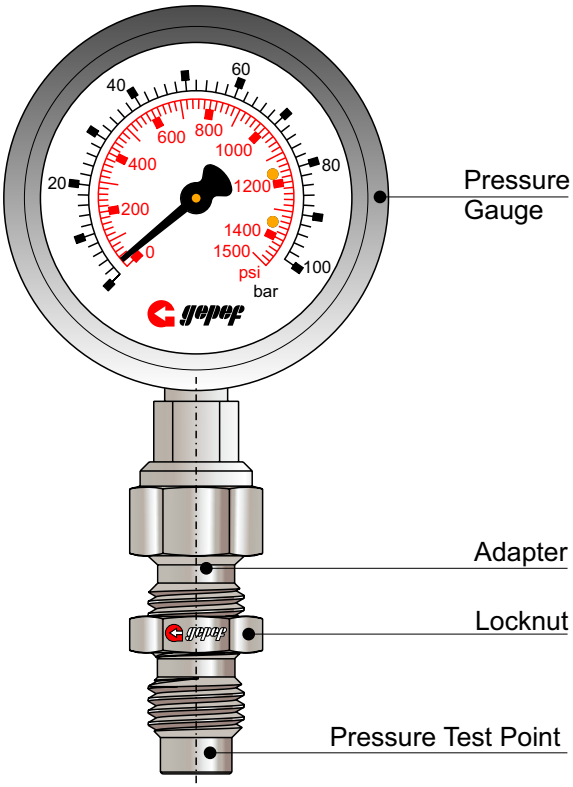

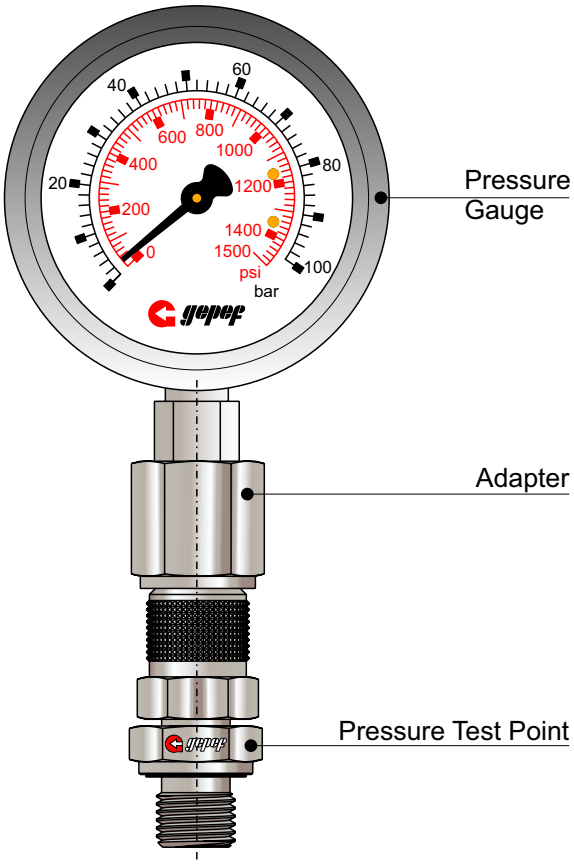

According to
ISO 15171-2

Metal Parts
Carbon Steel
Stainless Steel AISI 316

Working Pressure
Up to 630 bar / 9137 PSI

Surface Treatmen
White trivalent zinc plating (Cr VI–free)
Zinc-nickel plating
Olive green finish

Seals & Operating Temperature
NBR / Buna-N (-25°C up to 100°C) (-13°F up to +212°F) - (Standard)
(FKM) Viton (-15°C up to 200°C) (-5°F up to +392°F) - **V**
EPDM (-40°C up to 150°C) (-40°F up to +302°F) - **E**

Fluid Compatibility
Hydraulic oils and other mineral-based fluids
Compatibility with other fluids: on request
Gases – please consult

Adapter for Capillary Hose Connection

ADMM

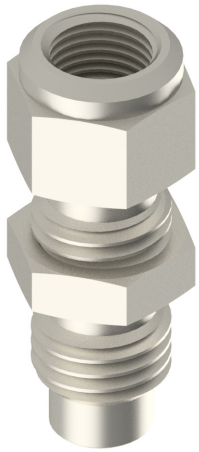

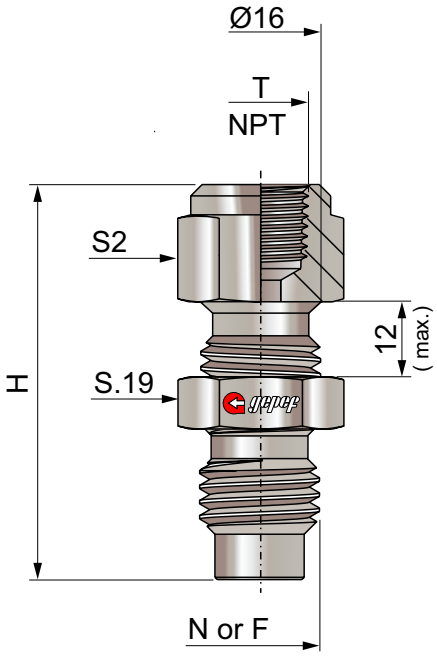

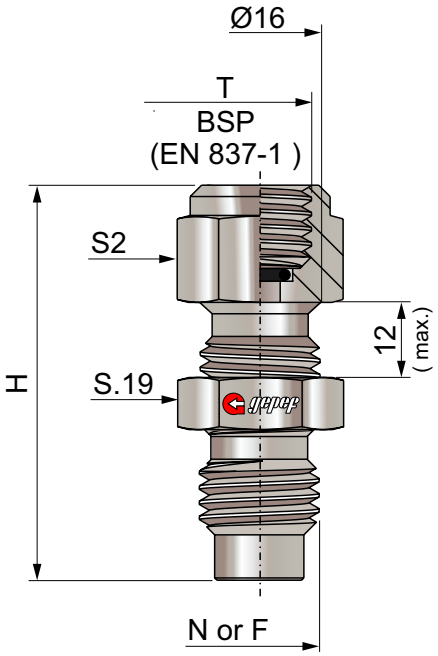

N or F Thread
N - M16x2
F - M16x1,5

Thread Type: T	S2	H
ADMM 1/8 NPT	19	55
ADMM 1/4 NPT	19	55
ADMM 1/2 NPT	27	60
ADMM G1/8 BSP	19	55
ADMM G1/4 BSP	19	55
ADMM G1/2 BSP	27	60

Coding Example:

N-ADMM 1/8 NPT (Adapter for connection to M16×2 capillary hose, with 1/8 NPT female thread).

For AISI 316 stainless steel, add the letter I at the end of the code.

For Viton (FKM) or EPDM seals, add the letter V or E at the end of the code.

If you require a different adapter configuration not listed in this catalog, please contact our Technical Department.

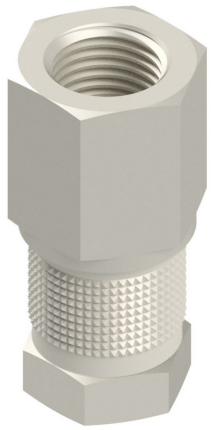

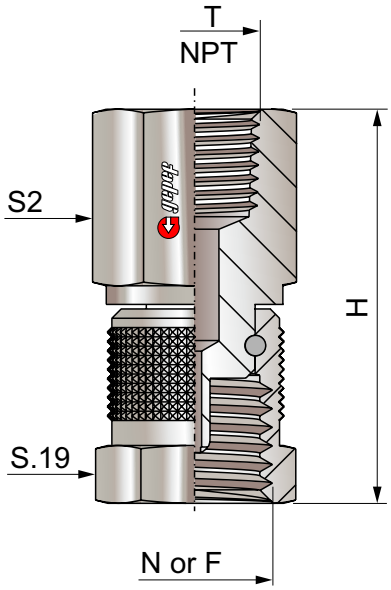

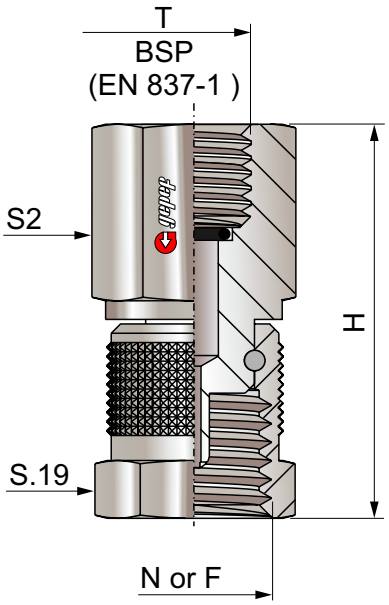

N or F Thread
N - M16x2
F - M16x1,5

Thread Type: T	S2	H
ADMT 1/4 NPT	19	44
ADMT 1/2 NPT	27	48
ADMT G1/4 BSP	19	44
ADMT G1/2 BSP	27	48

Coding Example:

N-ADMT G1/2 BSP (Female adapter for direct assembly to M16×2, with G1/2 BSP female thread).

For AISI 316 stainless steel, add the letter I at the end of the code.

For Viton (FKM) or EPDM seals, add the letter V or E at the end of the code.

If you require a different adapter configuration not listed in this catalog, please contact our Technical Department.

Female Adapter for Direct Connection

ADMF

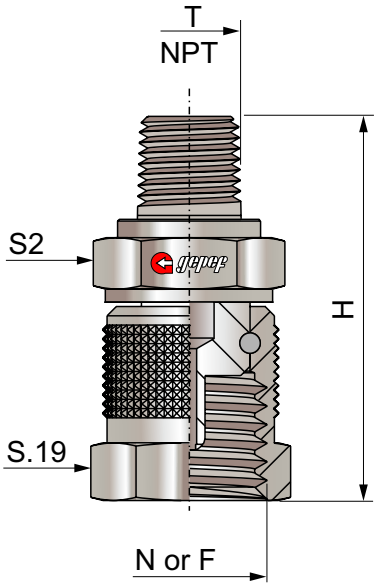

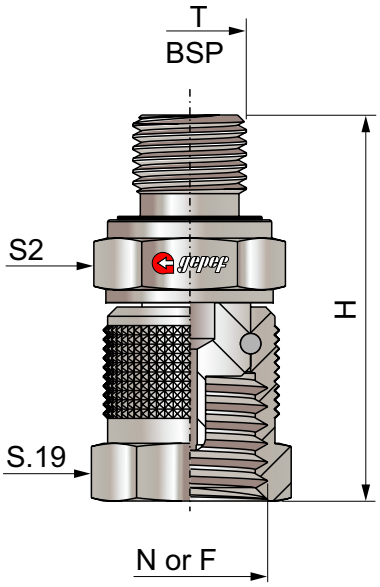

N or F Thread
N - M16x2
F - M16x1,5

Thread Type: T	S2	H	Form
ADMF 1/8 NPT	17	42	C
ADMF 1/4 NPT	17	42	C
ADMF 3/8 NPT	19	44	C
ADMF 1/2 NPT	22	45	C
ADMF G1/4 BSP	19	42	WD / O
ADMF G3/8 BSP	22	44	WD / O
ADMF G1/2 BSP	27	45	WD / O
ADMF M12x1,5	17	42	WD / O
ADMF M14x1,5	19	42	WD / O
ADMF M16x1,5	22	44	WD / O
ADMF M18x1,5	24	45	WD / O

Type O	Type C	Type WD
ISO 6149-2 / -3 Metric Thread	DIN 3852-2 - BSPT Thread	ISO 1179-2 - BSP Thread
ISO 11926-2 / -3 UNF Thread	ANSI / ASME B1.20.1-1983 - NPT Thread	ISO 9974-2 - Metric Thread
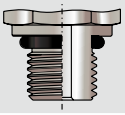	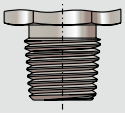	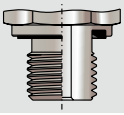

Coding Example:

N-ADMF 1/8 NPT (Male–female adapter for direct connection to M16×2, with 1/8 NPT male thread).

For AISI 316 stainless steel, add the letter I at the end of the code.

For Viton (FKM) or EPDM seals, add the letter V or E at the end of the code.

If you require a different adapter configuration not listed in this catalog, please contact our Technical Department.

AOM BSP / NPT

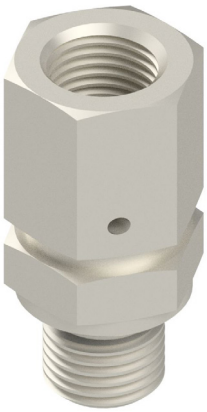

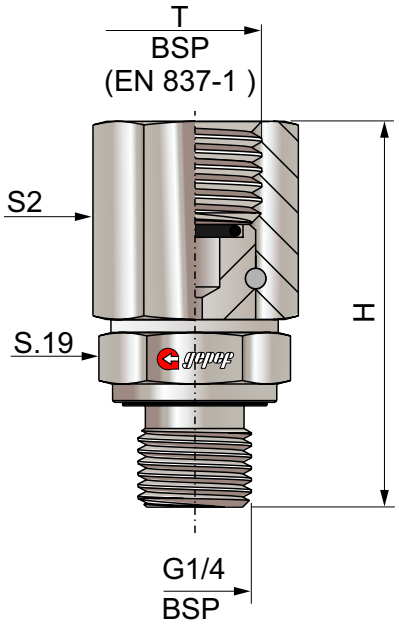

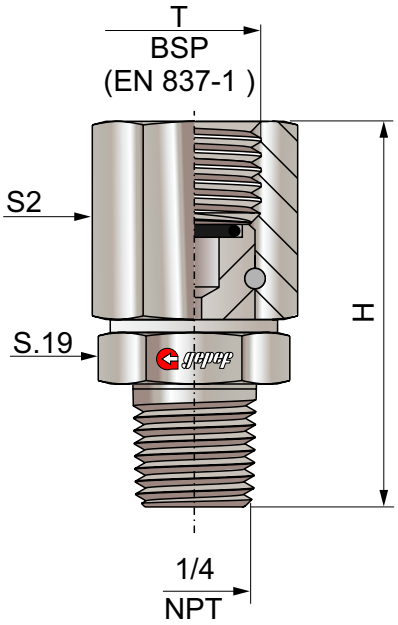

Thread Type: T	S2	H
AOM 1/4 NPT	17	43
AOM 1/2 NPT	22	47
AOM G1/4 BSP	19	41
AOM G1/2 BSP	27	46

Type O	Type C	Type WD
ISO 6149-2 / -3 Metric Thread	DIN 3852-2 - BSPT Thread	ISO 1179-2 - BSP Thread
ISO 11926-2 / -3 UNF Thread	ANSI / ASME B1.20.1-1983 - NPT Thread	ISO 9974-2 - Metric Thread
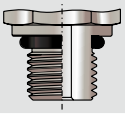	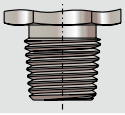	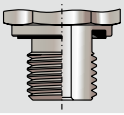

Coding Example:

AOM G1/4 BSP (Swivel adapter for 1/4 BSP pressure gauge, with 1/4 BSP female thread).

For AISI 316 stainless steel, add the letter I at the end of the code.

For Viton (FKM) or EPDM seals, add the letter V or E at the end of the code.

If you require a different adapter configuration not listed in this catalog, please contact our Technical Department.

AOM 24° DIN 2353

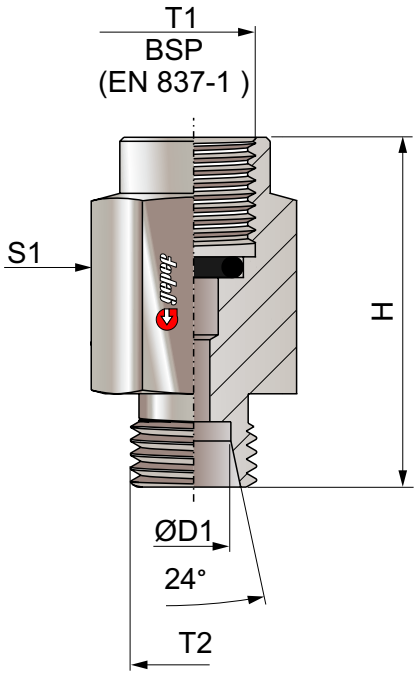

EN 837-1 / DIN 2353 L Series						
Code	T1	T2	D1	S1	H	Working Pressure
AOM G1/4x6LM	G1/4 BSP	M12x1,5	6	19	29	315 bar / 4568 PSI
AOM G1/4x8LM	G1/4 BSP	M14x1,5	8	19	29	315 bar / 4568 PSI
AOM G1/4x10LM	G1/4 BSP	M16x1,5	10	19	30	315 bar / 4568 PSI
AOM G1/4x12LM	G1/4 BSP	M18x1,5	12	19	30	315 bar / 4568 PSI

EN 837-1 / DIN 2353 S Series						
Code	T1	T2	D1	S1	H	Working Pressure
AOM G1/4x6SM	G1/4 BSP	M14x1,5	6	19	30	630 bar / 9137 PSI
AOM G1/4x8SM	G1/4 BSP	M16x1,5	8	19	30	630 bar / 9137 PSI
AOM G1/4x10SM	G1/4 BSP	M18x1,5	10	19	31	630 bar / 9137 PSI
AOM G1/4x12SM	G1/4 BSP	M20x1,5	12	19	31	630 bar / 9137 PSI

Coding Example:

AOM G1/4x6LM (1/4 BSP pressure gauge adapter, with M12×1.5 male thread).

For AISI 316 stainless steel, add the letter I at the end of the code.

For Viton (FKM) or EPDM seals, add the letter V or E at the end of the code.

If you require a different adapter configuration not listed in this catalog, please contact our Technical Department.

AOM 24° DIN 3865

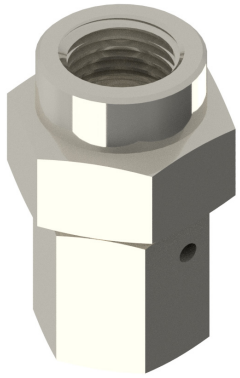

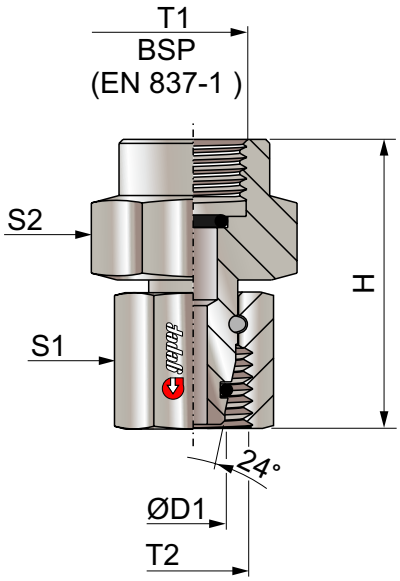

EN 837-1 / DIN 3865 L Series							
Code	T1	T2	D1	S1	S2	H	Working Pressure
AOM G1/4x6LF	G1/4 BSP	M12x1,5	6	19	17	37	315 bar / 4568 PSI
AOM G1/4x8LF	G1/4 BSP	M14x1,5	8	19	17	37	315 bar / 4568 PSI
AOM G1/4x10LF	G1/4 BSP	M16x1,5	10	19	19	37	315 bar / 4568 PSI
AOM G1/4x12LF	G1/4 BSP	M18x1,5	12	19	22	37	315 bar / 4568 PSI

EN 837-1 / DIN 3865 S Series							
Code	T1	T2	D1	S1	S2	H	Working Pressure
AOM G1/4x6SF	G1/4 BSP	M14x1,5	6	19	17	37	630 bar / 9137 PSI
AOM G1/4x8SF	G1/4 BSP	M16x1,5	8	19	19	37	630 bar / 9137 PSI
AOM G1/4x10SF	G1/4 BSP	M18x1,5	10	19	22	40	630 bar / 9137 PSI
AOM G1/4x12SF	G1/4 BSP	M20x1,5	12	19	22	40	630 bar / 9137 PSI

Coding Example:

AOM G1/4x6LM (1/4 BSP pressure gauge adapter, with M12×1.5 female thread).

For AISI 316 stainless steel, add the letter I at the end of the code.

For Viton (FKM) or EPDM seals, add the letter V or E at the end of the code.

If you require a different adapter configuration not listed in this catalog, please contact our Technical Department.

Pressure Gauge Swivel Adapter for Panel

ADAOM

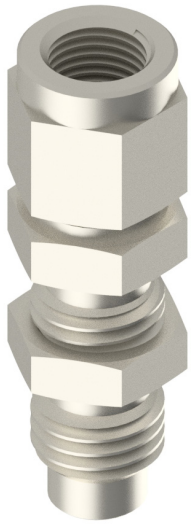

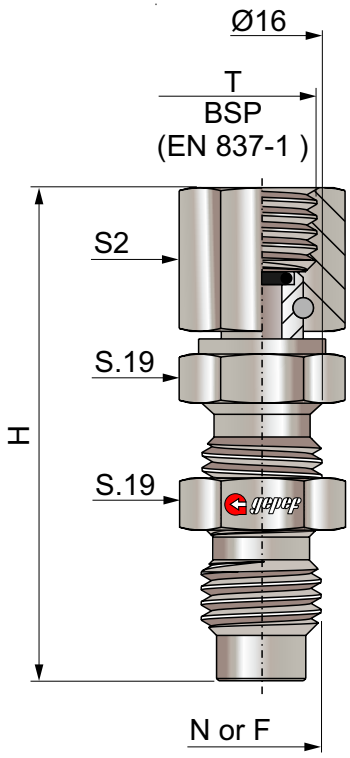

N or F Thread	Thread Type: T	S2	H
N - M16x2	ADAOM G1/4 BSP	19	65
F - M16x1,5	ADAOM G1/2 BSP	27	68

Coding Example:

N-ADAOM G1/2 BSP (Pressure gauge swivel adapter for panel and M16×2 pressure gauge, with G1/2 BSP female thread).

For AISI 316 stainless steel, add the letter I at the end of the code.

For Viton (FKM) or EPDM seals, add the letter V or E at the end of the code.

If you require a different adapter configuration not listed in this catalog, please contact our Technical Department.

Manufacturing Facility

+ 55 15 3264-1222

gepef@gepef.com.br

www. gepef.com.br

Avenida do Trabalhador, 1.680
ZIP Code 18552-100 - Boituva - SP
Brazil

Head Office & Operations Center

Av. Antônio Ângelo Amadio 681
ZIP Code 18552-112 - Boituva - SP
Brazil

Branch Office – Belo Horizonte, MG – Brazil - Regional sales operations for Minas Gerais and Brazil's Central-West Region

+ 55 31 3327-4459

gepef-bh@gepef.com.br

www.gepef.com.br

Avenida Professor Mário Werneck, 300
(10th Floor – Room 1004 – Tower 2) – Estoril District
ZIP Code 30455-610 - Belo Horizonte - MG
Brazil

Developed by: JDM Digital Mídia +55 11 99286 0900